Superseded by T HR EL 03002 SP v1.0, 14/09/2018

Engineering Specification
Electrical

EP 03 02 30 00 SP

SEMICONDUCTOR 12 PULSE SERIES BRIDGE RECTIFIER POWER CUBICLE

Version 2.1

Issued May 2013

Owner:	Chief Engineer, Electrical		
Approved by:	Neal Hook Chief Engineer Electrical	Authorised by:	Neal Hook Chief Engineer Electrical

Disclaimer

This document was prepared for use on the RailCorp Network only.

RailCorp makes no warranties, express or implied, that compliance with the contents of this document shall be sufficient to ensure safe systems or work or operation. It is the document user's sole responsibility to ensure that the copy of the document it is viewing is the current version of the document as in use by RailCorp.

RailCorp accepts no liability whatsoever in relation to the use of this document by any party, and RailCorp excludes any liability which arises in any manner by the use of this document.

Copyright

The information in this document is protected by Copyright and no part of this document may be reproduced, altered, stored or transmitted by any person without the prior consent of RailCorp.

Transport RailCorp NSW

Engineering Specification

Superseded by T HR EL 03002 SP v1.0, 14/09/2018

Document control

Version	Date	Summary of change
	January 2004	Last Technical Review
2.0	May 2010	Application of TMA 400 format
2.1	May 2013	Update template

Superseded by T HR EL 03002 SP v1.0, 14/09/2018

Contents

1 Scope and Application 5
2 References 5
2.1 RailCorp Engineering Standards 5
2.2 Australian Standards 6
2.3 Drawings 6
3 Definitions and Abbreviations 6
4 Functional Characteristics 7
4.1 General 7
4.2 Whole-of-Life Cost 9
4.3 Tolerances 10
5 Performance Characteristics 10
5.1 General 10
5.2 Voltage Rating 10
5.3 Overload Rating 11
6 Technical Characteristics 11
6.1 Cubicle 11
6.1.1 General 11
6.1.2 Panels and Doors 11
6.1.3 Painting 11
6.1.4 Mounting 12
6.1.5 Bonding 12
6.1.6 Access 12
6.1.7 Lifting Points 12
6.1.8 Labelling 12
6.2 Diode Assembly 13
6.2.1 General 13
6.2.2 Diode Protection 13
6.3 Conductors 13
6.3.1 Exposed Conductors 13
6.3.2 Clearances 13
6.3.3 Connections 14
6.4 Rectifier Frame Leakage 15
6.5 Auxiliary Transformer connections 15
6.6 Cooling 15
6.7 Electrical and Temperature Monitoring 15
6.7.1 General 15
6.7.2 Instrumentation 16
6.7.3 Thermal Model 16
6.7.4 Temperature Calibration 16
6.8 Negative Isolator 17
6.9 Marshalling Cubicle 17
6.10 Interface Equipment 17
6.10.1 General 17

Superseded by T HR EL 03002 SP v1.0, 14/09/2018

6.10.2 Harmonic Filter 17
6.10.3 Rectifier Transformers 18
6.10.4 Negative Reactor 18
6.10.5 Auxiliary Transformer 18
6.10.6 ACCB 18
6.10.7 DCCB 18

7 Integrated System Support Requirements 19
7.1 Integrated Support Objectives 19
7.2 Equipment Supplier Deliverable 19

8 Tests 19
8.1 General 19
8.2 Routine Tests 19
8.2.1 General 19
8.2.2 Insulation Test 20
8.2.3 Light-Load and Functional Test 20
8.2.4 Rated Current Test 20
8.2.5 Temperature Rise Test 20
8.2.6 Power Loss Determination 20
8.3 Type Tests 20
8.3.1 General 20
8.3.2 Temperature Rise Test 20
8.3.3 Overcurrent Capability Test 20

9 Data Set associated with the Equipment 21
9.1 Drawings and Information 21
9.2 Test Results 21
9.3 Life Cycle Costing 21
9.4 Technical Schedule 21

Appendix A Technical Schedule 22
Drawings to be submitted with the Tender 24

Appendix B Tender Checklist 25

Appendix C Requirements for Technical Aspects of Tender Evaluation 26

Appendix D Drawings 27

Superseded by T HR EL 03002 SP v1.0, 14/09/2018

1 Scope and Application

This document details the whole of life performance requirements for the power cubicle of a twelve pulse semiconductor rectifier in a series bridge configuration for use in the RailCorp traction system. It contains all the information required to ensure that the twelve pulse series bridge power cubicle is compatible for use within the RailCorp network.

This document is not applicable to rectifier power cubicles for half wave, full wave single bridge (6 pulse) and rectiformers, all of which have been operated within the RailCorp network.

The requirements of this document apply when a new rectifier is installed in a RailCorp substation with a suitably specified rectifier transformer and other equipment. The twelve pulse series bridge power cubicles that have been installed in the last few years meet most of the requirements of this document with the major differences being the separation of the rectification controls from the power cubicle, the negative isolator incorporated into the power cubicle and the inclusion of electrical and temperature monitoring requirements. The release of this document will not affect the operation or maintenance of existing rectifiers in the RailCorp network.

The value for the minimum clearance in air between uninsulated 1500 Vdc conductors has been changed to 100 mm and between such conductors and earthed metalwork has been changed to 80 mm in this document. The minimum clearance of 37 mm that has been specified in some previous documents was based on an existing clearance within a specific enclosed piece of equipment. It is not considered suitable for a more exposed piece of equipment such as a rectifier.

2 References

2.1 RailCorp Engineering Standards

The following RailCorp Engineering Standards are either referenced in this document or can provide further information:

EP 00 00 00 12 SP	*Electrical Power Equipment - Integrated Support Requirements*
EP 00 00 00 16 SP	*Electrical Power System Signage*
EP 03 00 00 01 TI	*Rectifier Transformer & Rectifier Characteristics.*
EP 03 01 40 00 SP	*Rectifier Transformer.*
EP 03 02 00 01 SP	*Rectification Controls.*
EP 03 03 60 00 SP	*Harmonic Filter*
EP 03 05 70 00 SP	*Outdoor Reactor*
EP 20 10 00 01 SP	*1500 Volt DC Cable Ratings*
EP 90 20 00 01 SP	*1500 V DC Equipment Current Ratings*
EP 90 20 00 02 SP	*1500 V System Voltage Ratings*

Superseded by T HR EL 03002 SP v1.0, 14/09/2018

2.2 Australian Standards

The following Australian Standards are either referenced in this document or can provide further information:

AS 1042:1973	*Direct-acting Indicating Electrical Measuring Instruments and their Accessories. (Withdrawn)*
AS 1675:1986	*Current Transformers - Measurement and Protection.*
AS 1939:1990	*Degrees of protection provided by enclosures for electrical equipment (IP Code).*
AS 1955.1:1977	*Semiconductor Convertors - General. (Withdrawn)*
AS 2067:1984	*Switchgear Assemblies and Ancillary Equipment for Alternating Voltages Above 1 kV.*
AS 2700:1996	*Colour Standards for General Purposes.*
AS 60146.1.1:2002	*Semiconductor converters Part 1.1: General requirements and line commutated converters - Specifications of basic requirements.*
AS 60146.1.2:2002	*Semiconductor converters Part 1.2: General requirements and line commutated converters - Application guide.*
AS 60146.1.3:2002	*Semiconductor converters Part 1.3: General requirements and line commutated converters - Transformers and reactors.*

2.3 Drawings

The following drawings can provide further information:

EL 0214515	*Power cubicle connection arrangement*

3 Definitions and Abbreviations

ACCB Alternating current circuit breaker

DCCB Direct current circuit breaker

Lock-out The accb and dccb are tripped by the operation of one or more protective devices and cannot be reclosed until an operator has attended on site to reset the 'lockout'.

Remote control Operation of equipment using supervisory control.

Supervisory A connection to the Electrical Operating Centre to allow the remote operation of circuit breakers and provision for remote monitoring of alarms using a SCADA system.

SCADA Supervisory Control and Data Acquisition system.

LED Light Emitting Diode.

Natural air cooling Cooling by natural convection of the ambient air.

Superseded by T HR EL 03002 SP v1.0, 14/09/2018

4 Functional Characteristics

4.1 General

The equipment covered by this document will be used in traction substations. The substations convert electricity from the RailCorp high voltage a.c. network to supply its railway system at a nominal 1500 V_{dc}.

The positive side of the rectifier feeds the overhead conductors of the system through 1500 V dc high speed circuit breakers. The negative return is via the rails which are unearthed but normally close to earth potential.

415/240 V_{ac} auxiliary supply for the substation is derived from the secondary of the rectifier transformer. Fuses to protect this tee-off are to be provided within the rectifier cubicle. Details are provided in Section 6.10.5

SCADA equipment is used to provide remote open and close signals for the control of the ACCB and DCCB associated with the rectifier and remote indication of whether the circuit breakers are open or closed and also alarm conditions related to the rectifier.

Figure 1 shows the typical RailCorp standard transformer and rectifier arrangement.

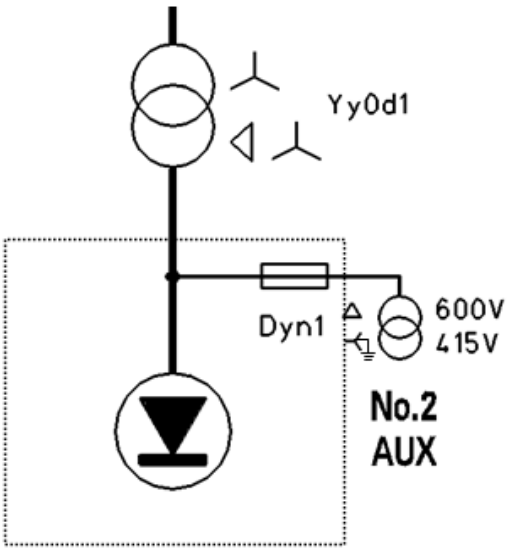

Figure 1 - Standard transformer and rectifier arrangement.

Superseded by T HR EL 03002 SP v1.0, 14/09/2018

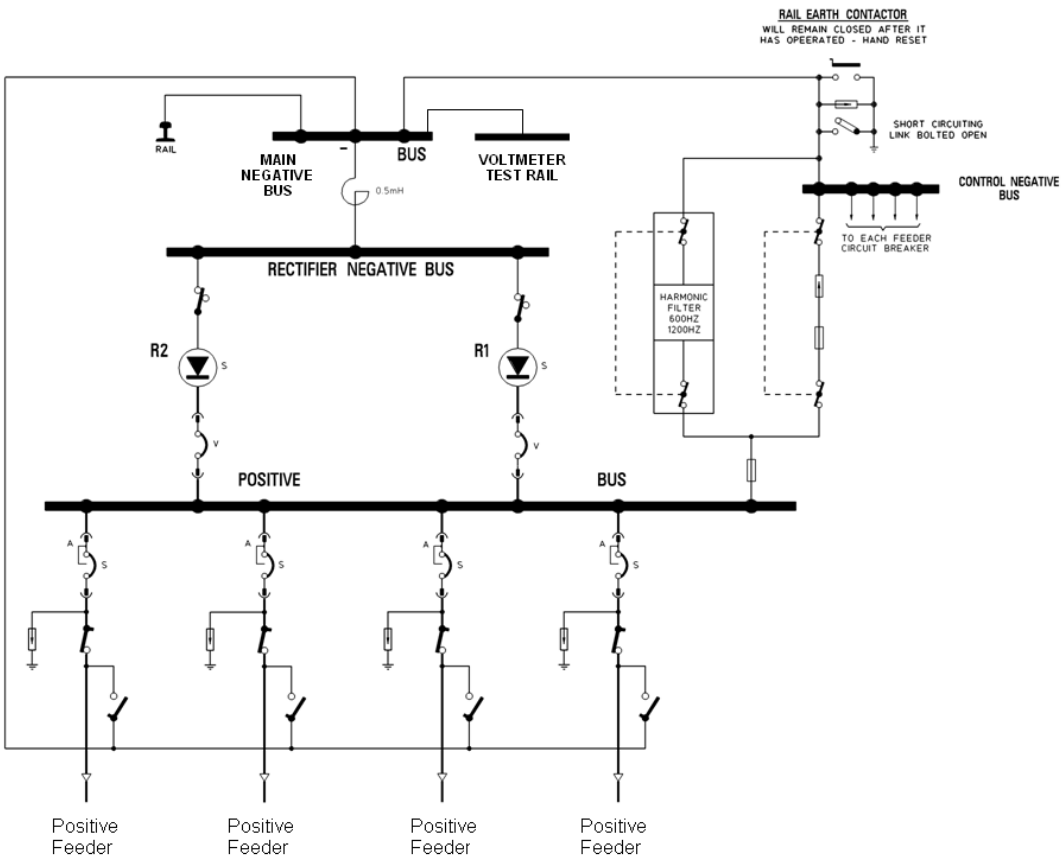

Figure 2 - Typical substation dc arrangement

Note:

A: Automatic

S : Supervisory control

V: Variably opened or closed

Figure 2 shows the typical RailCorp substation DC equipment arrangement.

Superseded by T HR EL 03002 SP v1.0, 14/09/2018

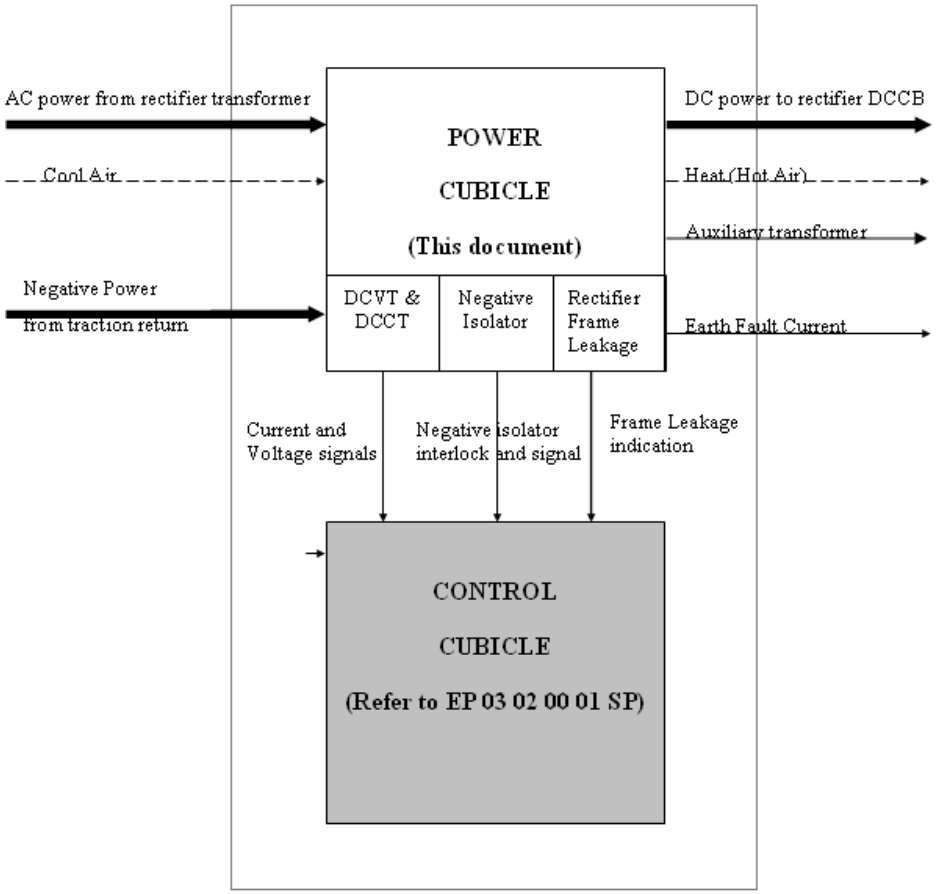

Figure 3 - 3 Rectifier Interface Block Diagram

Figure 3 shows the typical RailCorp rectifier block diagram indicating the interfaces between the two main sections of the rectifier and with other substation equipment.

4.2 Whole-of-Life Cost

The selection of the most suitable rectifier shall be made on the basis of minimising the whole-of-life cost. The following factors are considered in determining this:-

- Initial purchase price.
- Cost of changes to the Technical Maintenance Plan & Service Schedules or the creation of new manuals & schedules.
- Cost of manuals.
- Cost of maintenance.
- Cost of replacement parts.
- Cost of inventory spares.
- Environmental costs.
- Electrical losses.
- Cost of installation.
- Reliability and cost of failures.
- Cost of modifications to other parts of the installation.
- Lifetime of equipment.
- Discount rate.
- Cost of staff training.
- Cost of decommissioning and disposal.
- Cost of special tools.
- Cost of changes and management of drawings.

Superseded by T HR EL 03002 SP v1.0, 14/09/2018

4.3 Tolerances

Tolerances of any items not specifically mentioned elsewhere in this document shall default to the values stated in *AS 60146.1.1:2002*, Section 4.3.

5 Performance Characteristics

5.1 General

The standard power ratings for rectifiers used in the RailCorp network are 2.5 MW, 4 MW and 5 MW. At a nominal full load voltage of 1550 V the base full load currents shall be taken as 1600 A, 2600 A and 3200 A respectively.

5.2 Voltage Rating

The power cubicle is supplied from a RailCorp specified rectifier transformer, refer to *EP 03 01 40 00 SP*, which has two secondary windings, one connected in star and one connected in delta, each rated at 600 V_{ac}. For further information refer to Section 6.10.3.

The rectifier shall be capable of withstanding voltages of up to 2200 V_{dc} presented to the output terminals by regenerating trains. The regenerative braking equipment on trains is fitted with an over-voltage relay set at 2050 V_{dc}

A surge arrester is connected between the positive busbar and negative busbar of the standard RailCorp substation design to withstand the effect of switching transients and surges due to lightning strikes on the unearthed traction system. Refer to typical substation layout single line diagram. The characteristics of the surge arresters used on the 1500 Vdc system are detailed in the RailCorp document '*EP 90 20 00 02 SP* - 1500 V System Voltage Ratings'. At the time of publication of this document the specified surge arrester was a heavy duty gapless metal-oxide type with a nominal discharge current of 10 kA. The energy absorption capacity is not less than 25 kJ.

The characteristics are stated as:

Metal Oxide type	Voltage
Continuous Operating Voltage	2100 Vdc
Maximum Overvoltage	2800 Vdc
Residual Voltage at 5 kA	5.3 kV peak
Residual Voltage at 10 kA	5.7 kV peak
Residual Voltage at 20 kA	6.2 kV peak

Table 1 - 1500 V Surge Arrester Characteristics

In addition surge arresters are fitted to the substation busbars and both ends of the 1500 V feeders. The surge suppression circuits in the rectifier must produce the correct voltage co-ordination with these surge arresters, or a different surge arrester supplied as part of the rectifier package.

Superseded by T HR EL 03002 SP v1.0, 14/09/2018

5.3 Overload Rating

The rectifier shall meet the overload conditions specified in the RailCorp document 'EP 90 20 00 01 SP - 1500 V DC Equipment Current Ratings'. At the time of publication this document requires rectifier equipment to be capable of conducting 100 percent rated load continuously in an ambient temperature of 40°C followed by any one of the overload conditions shown in Table 2. The equipment must meet each one of these individual overload conditions after temperature stabilisation at 100 percent load. The intent is not to rate the equipment to meet the overload conditions consecutively.

% of continuous rating	Duration of overload
100	Continuous
150	2 hours
200	30 minutes
300	1 minute
400	10 seconds

Table 2 - Rectifier Equipment Overload Ratings

The rectifier equipment can be expected to sustain overload conditions twice a day, once in the morning peak period and once in the afternoon peak period.

6 Technical Characteristics

6.1 Cubicle

6.1.1 General

The rectifier power cubicle shall be designed for indoor use. Critical dimensions are shown on drawing EL 0214515, a copy is included in the appendices.

The overall design should minimise the build-up of dust within the rectifier. In some previous designs dust has been a particular problem in the area of the auxiliary fuses and surge suppression circuits that have formed a large horizontal surface that is not easily accessible for cleaning.

6.1.2 Panels and Doors

All panels, including doors, shall be constructed of mild steel plate with robust steel framework sufficiently braced to prevent warping and twisting. Panels shall be made removable where access is required for maintenance of internal components. The doors shall be fitted with removable pin hinges and locking handles.

The completed cubicle shall be rated as IP2X as defined in AS 1939. This rating need not apply to the top surface of the rectifier, provided the safety clearances specified in Section 6.3.1 are met.

6.1.3 Painting

The outside surfaces of the rectifier cubicle shall be painted storm grey, colour No N42 in accordance with AS 2700. The inside surfaces shall be painted white, colour No N14 in accordance with AS 2700. The finishing coat shall be a textured powder coat.

Superseded by T HR EL 03002 SP v1.0, 14/09/2018

6.1.4 Mounting

The rectifier power cubicle will be mounted, over a pit, on an insulating material rated at 1500 Vdc to ensure that the rectifier frame is electrically isolated from the main substation earth. In the past a 3 mm thick nylon gasket “CADCO” or other similar material has been used. The gasket is fitted in situ to reduce the risk of damage.

6.1.5 Bonding

All surrounding metal enclosures, including doors, shall be bonded to the supporting framework of the rectifier. The frame shall be connected to the rectifier frame leakage device. After installation of the rectifier the installer will provide a connection to the substation earth system via the frame leakage device, refer to Section 6.4.

6.1.6 Access

The cubicle shall be configured to provide a ready maintenance access to all parts. In particular, it shall be possible to clean or replace the following items without first removing any other item: diode assemblies, surge suppression network; auxiliary output fuses; current transducer; voltage transducer; temperature transducers; positive and negative output connections.

6.1.7 Lifting Points

Provision shall be made for slinging the cubicle complete with all equipment installed.

6.1.8 Labelling

All doors and removable panels shall be fitted with suitable warning notices – “Danger High Voltage”

A notice shall be fitted to the front of the power cubicle listing all points of isolation required to make the equipment safe to work on. This shall include:

- The ACCB, DCCB (or other positive isolator), and negative switch.
- If the LV changeover arrangement is not fail safe in regards to back-feed or has bypass switches provided then this must also be included.
- The point of isolation for any control or other auxiliary circuits that are present in the power cubicle.

Superseded by T HR EL 03002 SP v1.0, 14/09/2018

6.2 Diode Assembly

6.2.1 General

The rectifier shall consist of assemblies of semi-conductor diodes arranged in a series bridge connection for twelve pulse operation. The design shall incorporate a minimum number of diodes, no more than a total of 24 power diodes shall be acceptable. It shall be similar to *AS 60146.1.3:2002*, table 2, connection number 12, except the delta winding shall be closest to the negative and the star winding closest to the positive. Note: this connection is equivalent to connection number 13a in the withdrawn standard *AS 1955.1:1977*. The system is not earthed.

The assembly shall be constructed to allow easy access for cleaning insulated sections of the diode assembly.

Sections of the assembly shall be clearly labelled as positive, negative or AC to aid identification during fault finding of diodes. This may be done with the aid of colour coding: red, white and dark blue for ac; brown for positive, light blue for negative; no colour for the series bridge.

6.2.2 Diode Protection

Diode protection fuses shall not be used.

Each rectifier shall be supplied complete with all the equipment necessary for suppression of the hole storage effects, surge voltage suppression and cooling. Diode failure detection equipment shall not be used.

The diodes shall safely carry the prospective fault currents without rupturing the diode case.

6.3 Conductors

6.3.1 Exposed Conductors

Safety clearances to exposed live 600 V conductors are to be in accordance with Table 10.1 of *AS 2067*. This is currently a taut string distance of 2506 mm to live exposed 600 V conductors as shown on drawing EL 0214515, a copy is included in the appendices.

6.3.2 Clearances

The minimum clearance in air between uninsulated 1500 V_{dc} conductors shall not be less then 100 mm and between such conductors and earthed metalwork shall not be less than 80 mm. If the design requires a clearance less than these values then a documented Engineering Assessment must verify that the design has addressed the issues of accessibility for maintenance and inspections; use of standard components; the flexing of panels and doors; and the open nature of the rectifier that allows the ingress of vermin, dust and other pollution contaminants.

Superseded by T HR EL 03002 SP v1.0, 14/09/2018

6.3.3 Connections

Cable entry shall be arranged for top entry of the six phases of the main a.c. connections and bottom entry of the main d.c. positive and negative connections. The a.c. and d.c. terminals shall be fitted with appropriate connecting palms to attach 100 mm lugs with 2 x 14 mm holes at 50 mm centres. The cables used may be either 240 mm^2 or 400 mm^2 and appropriate spacing must be maintained for either circumstance. The number of cables required should be checked by reference to Engineering Standard *EP 20 10 00 01 SP* - 1500 V DC Cable Ratings. At the time of publication of this document the number of cables were as shown in the table below:

Rectifier Continuous Rating	AC Cables/Phase (unscreened)	Positive Cables (screened)	Negative Cables (unscreened)
2.5 MW	5 x 240 mm^2 or 4 x 400 mm^2	5 x 240 mm^2 or 4 x 400 mm^2	5 x 240 mm^2 or 4 x 400 mm^2
4.0 MW	9 x 240 mm^2 or 6 x 400 mm^2	8 x 240 mm^2 or 6 x 400 mm^2	8 x 240 mm^2 or 6 x 400 mm^2
5.0 MW	12 x 240 mm^2 or 8 x 400 mm^2	10 x 240 mm^2 or 7 x 400 mm^2	10 x 240 mm^2 or 7 x 400 mm^2

Table 3 - Numbers of Cables

Refer to drawing EL 0214515, a copy is included in the appendices, for palm details. The final size of the dc palms is dependent on the number of positive and negative cables required. The configuration of the cable connections to the dc busbars is dependent on the overall design but allowances must be made for maintenance access to the connections and to ensure the cables do not adversely obstruct the flow of cooling air through the rectifier.

It is important that the physical arrangement of the connections between the rectifier transformer and the rectifier power cubicle are aligned to avoid crossing of the 600 V ac cables. The relationship of the connections are highlighted in Figure 4 below, which also draws attention to the auxiliary transformer connections. No other major equipment or components are shown.

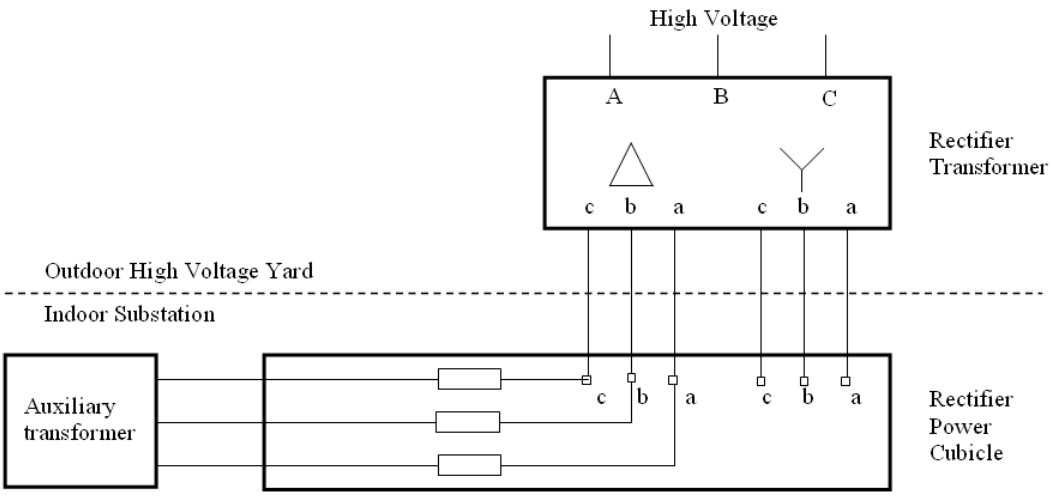

Figure 4 - Rectifier AC Connections Diagram

Superseded by T HR EL 03002 SP v1.0, 14/09/2018

6.4 Rectifier Frame Leakage

A protective device, operating at a threshold not less than 1 A_{dc} and not exceeding 100 A_{dc} leakage current between the insulated frame of the rectifier and earth, shall be provided as rectifier frame leakage protection. There is no requirement for the threshold to be adjustable within this range. The contacts shall have a minimum make and break rating of 1 A 125 Vdc and 5 A 240 Vac and shall have dust proof covers. The usually open contacts of this device shall withstand a voltage of 5 kVrms to the main 1500 V circuit for 1 minute. The device shall be capable of handling the prospective fault current as determined as part of the rectifier power cubicle design. RailCorp use a standard protection system consisting of a DCCB, refer to Section 6.10.7 and an ACCB, refer to Section 6.10.6, with back-up relays.

Note the requirements of Section 6.1.5 for the connection of the device to the substation earth.

6.5 Auxiliary Transformer connections

The rectifier shall provide 3 x 2 kV, 50 A fuses and facility for the termination of three 16 mm^2 or 25 mm^2 unscreened 3.8/6.6 kV single core XLPE insulated cables for this purpose. Suitable cable entry and cable fixing arrangements for bottom entry shall be provided. Fuses are to be mounted to facilitate easy removal and replacement. The fuses and connections shall be clearly and indelibly labelled. Refer Section 6.10.5 for further details of auxiliary transformer.

6.6 Cooling

The rectifier shall be naturally air cooled. Fan cooling is not acceptable.

6.7 Electrical and Temperature Monitoring

6.7.1 General

To enable RailCorp to extract full capability from its assets, it is necessary to be able to assess present loadings and predict expected temperatures of critical elements of the rectifier for varying load conditions. Therefore accurate values of current, voltage and various temperature measurements are required as well as a reliable theoretical model of the rectifier for simulation of future loadings.

Real time values of rectifier output current and output voltage are to be measured to allow the calculation of output power for network monitoring.

The output current measurement will also be used in conjunction with measured cubicle air temperatures to predict the diode junction temperature and heatsink temperature and compare them with specified thermal limits.

This information is to allow the prediction of the expected temperatures for varying load conditions. A thermal model is to be provided that will use rectifier current, thermal time constants, for example heatsink time constant, and cubicle air temperatures to predict when load growth would reach equipment capacity.

Superseded by T HR EL 03002 SP v1.0, 14/09/2018

6.7.2 Instrumentation

The rectifier power cubicle shall incorporate transducers to transmit the following information to the rectifier controls to interface with the SCADA system and meters located in the rectifier control cubicle:

- Rectifier output current;
- Rectifier output voltage;
- Cubicle bottom (entry) air temperature;
- Cubicle top (exit) air temperature.

The output to the rectifier controls shall be 0-20 mA_{dc}. It is essential that the rectifier controls are isolated from the 1500 V_{dc} that is contained in the rectifier power cubicle. The isolation requirement is 5 kV_{rms} for 1 minute and clearances are specified in Section 6.3.2.

The preferred method for measuring the current and voltage is by the use of a dc current transformer and dc voltage transducer[1]. The placement of these devices should allow for easy access and replacement. The design shall allow for the effects of temperature rise in the cubicle and the risk of flashovers to the 1500 V_{dc} circuits. Aspects such as linearity of the measuring device over the full range of the overload characteristics of the rectifier, deterioration of the cables due to heat damage and proximity of cables to live exposed 1500 V_{dc} shall be allowed for. The overload characteristics are specified in Section 5.3.

Termination of the wiring shall be by screwed connections using pre-insulated crimp pin connectors. All wiring shall be flexible and multi-stranded and rated to withstand a test voltage of 1.5 kV_{rms} to frame for 1 minute and 5 kV_{rms} to 1500 V circuits for 1 minute. The terminal area shall be appropriately shielded from any heat generating components to reduce the risk of heat damage over the long term.

6.7.3 Thermal Model

A theoretical electrical/thermal model of the rectifier shall be provided including a derivative format suitable for computer simulation. The model shall be based on inputs of load current and cubicle air temperatures and shall incorporate diode, heatsink and any other relevant temperature time constants required to accurately simulate heatsink and diode junction temperatures and limits. The model shall be verified by the temperature rise tests up to 2 pu current. It is anticipated the ambient air temperatures at inlet air and the outlet air will be required as a minimum to represent the ambient air temperature in the model. The thermal time constants of the sensors must be considered.

6.7.4 Temperature Calibration

The temperature transducers fitted to provide for remote monitoring of top and bottom cubicle air temperatures shall be positioned to ensure correct tracking with the theoretical calculations of the diode temperature and heatsink temperature. This shall be confirmed by the temperature rise tests.

[1] LEM voltage transducer type LV 100-2000/SP6 or equivalent.

Superseded by T HR EL 03002 SP v1.0, 14/09/2018

6.8 Negative Isolator

A single pole, single way negative isolator to allow complete isolation of the rectifier from the negative return path shall be provided. A hinged link switch operated by an insulated stick is preferred, for simplicity, but a switch is acceptable. The isolator shall be placed within the rectifier power cubicle such that the isolator can only be accessed through a separate lockable door. An attempt to access the operating mechanism of the isolator shall result in the transfer of an interlock signal to the rectifier controls. This interlock signal is to be provided by a single voltage free changeover contact, suitable for making and breaking up to 100mA in a 120 V-dc circuit, control wiring to be terminated in the marshalling cubicle. A positive indication that the isolator is fully closed and a positive indication that the isolator is in the isolated position shall be achieved by direct observation or other suitable method.

The isolator shall meet the overload characteristics specified in Section 5.3. The isolator shall withstand fault currents as specified in Section 2 'Rectifier Equipment' of RailCorp document *EP 90 20 00 01 SP* – 1500V DC Equipment Current Ratings.

A set of indication contacts for each of the two states are to be provided and wired to the marshalling terminal – isolator fully closed position and isolator in the fully isolated position. The contacts are to be suitable for making and breaking up to 100mA in a 120 V –dc circuit. The contacts shall be suitable for switching relay coils and similar inductive loads.

Note: The majority of existing RailCorp substations do not have a negative switch as an integral part of the rectifier power cubicle. Instead, a wall mounted, stick-operated negative link switch is installed between the rectifier negative terminals and the series reactor.

6.9 Marshalling Cubicle

A marshalling cubicle shall be provided for the connection of instrumentation, control and 120 V_{dc} wiring. The purpose of this area is to act as an interface for the internal wiring and external wiring to ensure the isolation of the 1500 V components within the rectifier power cubicle. Allowances must be made for the external wiring to enter from either top or bottom. All wiring shall be terminated on standard DIN rail terminals. The preferred terminals are Weidmuller SAK series. Equivalent terminals may be used subject to prior approval. The terminals shall be clearly labelled. The terminations for the internal wiring shall allow for appropriate insulation needed to meet by the requirements due to any 1500 V rating or temperature conditions from such devices as the negative isolator, current, voltage and temperature transducers.

6.10 Interface Equipment

6.10.1 General

The following items are not part of the rectifier power cubicle and have interfaces with the power cubicle.

6.10.2 Harmonic Filter

A shunt harmonic filter is provided to reduce the telephone form factor of the output voltage from the substation to not more than 0.005 when the rectifier is operating at full load or at the overloads specified. The harmonic filter does not connect directly to the power cubicle but is installed between the positive bus and the main negative bus.

Superseded by T HR EL 03002 SP v1.0, 14/09/2018

6.10.3 Rectifier Transformers

A rectifier transformer is provided. It will have two secondary windings, one connected in star and one connected in delta, each rated at 600 Vac. The vector group is Yy0d1. The transformer MVA rating, primary voltage and impedance voltage will be detailed for each individual location.

6.10.4 Negative Reactor

A series reactor is provided to limit the rate of rise of fault currents. It will typically have an inductance of 0.5 mH (minimum 0.25 mH) and will be capable of carrying the load and overloads specified in Section 5.3 of this document.

6.10.5 Auxiliary Transformer

A 600 V/415 V, 20 kVA, 3 phase transformer is provided for the supply of substation auxiliary functions. The primary terminals will be connected to the a.c. terminals of the delta winding (the winding closest to the negative) of the rectifier transformer via 3 x 2 kV, 50 A fuses and three 16 mm^2 or 25 mm^2 unscreened 3.8/6.6 kV single core XLPE insulated cables – see Section 6.5. The neutral point of the secondary winding of the auxiliary transformer is connected to the substation earth mat.

6.10.6 ACCB

The maximum fault level on the RailCorp high voltage network is 1500 MVA for a 3 phase symmetrical fault. The fault level at the rectifier is limited by the transformer impedance and is approximately 35 MVA. This is achieved by specifying a different transformer impedance for each rectifier rating, refer to Section 6.3 in EP 03 01 40 00 SP – Rectifier Transformer. These are reproduced in Table 4 below.

2.68 MVA	4.28 MVA	5.35 MVA
8%	12%	14%

Table 4 - Transformer Impedances

An alternating current circuit-breaker and alternating current instantaneous overcurrent and earth leakage relay set to operate at approximately 5 times full load of rectifier provide the primary protection. The AC clearing time may be as high as 0.15 s for a DC fault condition. Operation of this protection will trip the AC circuit breaker only. Back up protection on the AC circuit breaker will also be provided.

6.10.7 DCCB

A rectifier dccb which is single pole, polarised and has been designed specifically for use on a 1500 Vdc traction duty will be provided. The dccb is self-contained with its own control equipment and will normally be set at approximately 1000 A reverse current but can be set at up to 3000 A maximum.

Superseded by T HR EL 03002 SP v1.0, 14/09/2018

7 Integrated System Support Requirements

7.1 Integrated Support Objectives

The tenderer must establish and provide the information required to operate and maintain the equipment throughout its operational life, in a cost effective manner and to a level that is consistent with the planned operational performance and usage of the rectifier power cubicle.

This includes:

- Specifying Maintenance Requirements
- Spares Support
- Operations and Maintenance Manuals
- Training, and
- Support Equipment and Tooling

7.2 Equipment Supplier Deliverable

The Integrated support requirements are a significant deliverable in the procurement of a new rectifier power cubicle. Manuals, training, documentation and other support deliverable's shall be in accordance with EP 00 00 0012 SP "Electrical Power Equipment - Integrated Support Requirements."

8 Tests

8.1 General

All semiconductor devices and stacks and other components of the rectifier equipment shall be routine tested before assembly.

In equipment tests, the assembly and other items of equipment may be tested separately if this is more convenient. When tested separately, or if the transformer is a not a part of the contract, then the stack or assembly shall be supplied from a transformer with a connection equivalent to that specified in this document.

8.2 Routine Tests

8.2.1 General

Each rectifier shall be subject to the routine tests set out below and with reference to the indicated Section of AS 60146.1.1 - 2002. All semiconductor devices and stacks and other components of the rectifier equipment shall be routine tested before assembly.

In equipment tests, the assembly and other items of equipment may be tested separately if this is more convenient. When tested separately, or if the transformer is a not a part of the contract, then the stack or assembly shall be supplied from a transformer with a connection equivalent to that specified in this document.

Superseded by T HR EL 03002 SP v1.0, 14/09/2018

8.2.2 Insulation Test

An insulation test (Section 4.2.1) shall be carried out to verify the correct state of insulation of the completely assembled unit. An insulation test voltage of at least 5.5 kVrms shall be used and a test voltage of 8 kVrms is preferred. Test method and results are to be provided.

8.2.3 Light-Load and Functional Test

The light-load test of Section 4.2.2 shall be carried out to verify that the equipment is correctly connected and that its static control properties fulfil the requirements of this document.

8.2.4 Rated Current Test

The rated current test of Section 4.2.3 shall be carried out to verify that the equipment will operate satisfactorily at rated current.

8.2.5 Temperature Rise Test

A temperature rise test consistent with the type test described in Section 8.3.2 shall be used to confirm the electrical/thermal model. A minimum of two overload conditions shall be checked. Refer to Section 6.7 for requirements of the thermal model to be validated by this temperature rise tests.

8.2.6 Power Loss Determination

The power loss determination of Section 4.2.4 shall be obtained by direct measurements using method A1, B or C of Section 4.1 of AS 60146.1.2 - 2002.

8.3 Type Tests

8.3.1 General

One rectifier of each rating shall be subject to the type tests set out below and with reference to the indicated clause of AS 60146.1.1 - 2002.

8.3.2 Temperature Rise Test

The temperature rise test of Section 4.2.5 of AS 60146.1.1 - 2002 shall be carried out to verify the design intention of the cooling system. The temperature rise test shall also be used to confirm the electrical/thermal model described in Section 6.7.3.

8.3.3 Overcurrent Capability Test

The overcurrent capability test of Section 4.2.12 of AS 60146.1.1 - 2002 shall be carried out to verify the overload ratings up to 2 pu conform with Table 2 of Section 5.3 of this document. The temperature of any connection, other than the connection of the diode to the heat sink, shall not exceed the guaranteed value.

Superseded by T HR EL 03002 SP v1.0, 14/09/2018

9 Data Set associated with the Equipment

The following data shall be maintained for each rectifier. This data will remain the property of RailCorp and maintained by the Maintenance Provider responsible for the traction substation in which the rectifier is installed.

9.1 Drawings and Information

The following drawings are required.

- **Schematic Diagram**

  Schematic Diagram with all diodes, resistors, capacitors and other components.

- **General Arrangement**

  General Arrangement drawing showing all external details including AC and DC connection details and all relevant dimensions.

- **Layout Drawing**

  Layout Drawing showing physical positions of all major components and including a parts list and legend.

- **Diode and Heatsink details**
- **Transducer details**

Full details of current, voltage and temperature transducers are to be provided.

9.2 Test Results

The results of all tests, including acceptance tests and periodic and corrective maintenance tests, shall be recorded and maintained.

9.3 Life Cycle Costing

All the data and assumptions pertaining to the determination of the whole-of-life cost calculations shall be recorded.

9.4 Technical Schedule

The information listed in the technical schedule of Appendix A, from the successful Tenderer, shall be maintained for each rectifier.

Superseded by T HR EL 03002 SP v1.0, 14/09/2018

Appendix A Technical Schedule

Rectifier Details:

Total number of diodes used in each rectifier …….....

Number of diodes connected in parallel per arm …….....

Number of diodes connected in series per arm …….....

Surge protection measures provided to cover hole storage effects as well as system and switching surges.

…….....…….....…….....…….....
…….....…….....…….....…….....
…….....…….....…….....…….....

Are surge diverters provided across the d.c. terminals? …….....

Minimum clearance in air between earthed metal work and uninsulated 1500 V conductors …….....mm

Minimum creepage distance between earthed metal work and uninsulated 1500 V conductors …….....mm

Material over which the above-mentioned creepage distance applies …….....mm

Minimum clearance between uninsulated phase conductors connected to rectifier transformer secondary …….....mm

Minimum clearance to earth of uninsulated phase conductors connected to rectifier transformer secondary …….....mm

Clearance required above cubicles for satisfactory circulation of cooling air …….....mm

Rectifier frame leakage prospective fault current capability …….....kA
…….....mS

Rectifier Losses

Losses at 5% full load …….....W

Losses at 25% full load …….....W

Losses at 50% full load …….....W

Losses at 100% full load …….....W

Losses at 150% full load …….....W

Losses at 200% full load …….....W

Forward Voltage Drop of the Rectifier

Voltage Drop at 5% full load …….....W

Voltage Drop at 25% full load …….....W

Voltage Drop at 50% full load …….....W

Voltage Drop at 100% full load …….....W

Voltage Drop at 150% full load …….....W

Voltage Drop at 200% full load …….....W

Superseded by T HR EL 03002 SP v1.0, 14/09/2018

Insulation Test Voltage

Insulation Test Voltage (Refer Section 8.2.2)	…….....	

Diodes

Diode manufacturer	…….....	
Manufacturer's type number	…….....	
Creepage distance over diode insulation	…….....	mm
Type of junction	alloyed / diffused	
Maximum allowable continuous operating temperature of junction	…….....	^{o}C
Anticipated failure rate of diodes	…….....	per year
Heat sink type number	…….....	
Material used for heat sink	…….....	
Has a type test been carried out on the same type of equipment?	…….....	

Diode Rating

The data listed below is for a junction temperature of	…….....	^{o}C
Rated 120° conduction average forward current of the diode IF(AV)	…….....	A
Rated voltage of the diode		
– U_F	…….....	V
– @ I_F	…….....	A
Rated repetitive peak reverse voltage of the diode (U_{RMM})	…….....	V
Rated non-repetitive peak reverse voltage of the diode. (U_{RSM})	…….....	V

Describe precautions taken to ensure that diodes connected in series operate with their reverse voltage rating.

……..... ……..... …….....

Superseded by T HR EL 03002 SP v1.0, 14/09/2018

Rated load + 200% for 30 minutes	…….....	…….....	^{o}C
Rated load + 300% for 1 minutes	…….....	…….....	^{o}C
Rated load + 400% for 10 seconds	…….....	…….....	^{o}C

*The base shall be that part of the case used for temperature measurements during the temperature rise tests.

Reliability Data

Design Life ……..... Years

Use separate sheet if necessary

Failure Modes (for Early, Normal Life, & Wear Out periods)

a) …….....

b) …….....

c) …….....

Mean Operating Hours Between Failures:

a) …….....

b) …….....

c) …….....

Time to Repair:

a) …….....

b) …….....

c) …….....

Drawings to be submitted with the Tender

Outline Drawing

Dimensioned outline drawing showing top, bottom, elevation and end views. The general arrangements and layouts are to be adhered to in the final design unless written approval is obtained from RailCorp.

Departure from Standard

Are there any departures from the requirements of this standard? Yes / No.

If Yes include details on a separate sheet.

Superseded by T HR EL 03002 SP v1.0, 14/09/2018

Appendix B Tender Checklist

Where this standard is used as the basis for procurement of rectifier power cubicles for a particular location, in addition to the general requirements in this standard the following information will need to be supplied related to the particular site:

- Number of rectifier power cubicles required.
- Power rating.
- DC auxiliary control voltage. This document is based on a 120 V / 125 V system. If a different voltage, such as 50 V as used previously, will be provided then the Tenderer must be made aware.
- The minimum size of the rectifier, which will be dependent on the size of the pit for the dc cables, or hole positions, depending on the substation floor design. A pit standard size of 2000 mm x 1000 mm has been previously used.
- Any site specific limitations on size or arrangement.
- Limitations due to access or transport.
- EP 00 00 00 12 SP Electrical Power Systems - Integrated Support Requirements Document included with RFT. All requirements listed in this document are relevant for this equipment.

Superseded by T HR EL 03002 SP v1.0, 14/09/2018

Appendix C Requirements for Technical Aspects of Tender Evaluation

Evaluation of tenders

Tender submissions will be evaluated based on a number of criteria. One constant criterion is compliance with this specification. The Chief Engineer Electrical requires that persons evaluating the technical aspects of this tender have sufficient technical competence for the task.

Tender evaluation committees shall forward details of persons evaluating the technical aspects of the tender to the Chief Engineer Electrical for concurrence. This will normally be in the form of an email and is to include sufficient detail of the tender and the person to enable the Chief Engineer Electrical to satisfy themself of the merits of the evaluating person. A minimum of 4 weeks notice is required prior to the evaluation of the Tenders.

The Chief Engineer Electrical will advise within 5 working days only if the person is considered technically unsuitable for the technical evaluation.

Acceptance of product

A number of the specifications require acceptance of product at both the factory and at site. The purchaser is to advise the Chief Engineer Electrical the details of the person carrying out the acceptance testing for the concurrence of the Chief Engineer Electrical. A minimum of 4 weeks notice is required prior to the evaluation of the acceptance testing.

The Chief Engineer Electrical will advise only if the person is considered unsuitable for the acceptance testing.

The Chief Engineer Electrical reserves the right to nominate a representative to review and/or attend such acceptance.

Record Keeping

Where product is purchased against this specification, the Chief Engineer Electrical requires that relevant detail be provided so that it can be logged against this specification.

For RailCorp purchases, all records are recorded in Ariba.

Where this specification is utilised by parties external to RailCorp (Alliance parties, etc) then copies of all relevant technical information and evaluation shall be forwarded to the Chief Engineer Electrical for filing against the specification. In addition copies of selected commercial information pertaining to the ongoing support of the product as follows is also required.

- Warranty details
- Spare parts and associated availability
- Product support information.

Superseded by T HR EL 03002 SP v1.0, 14/09/2018
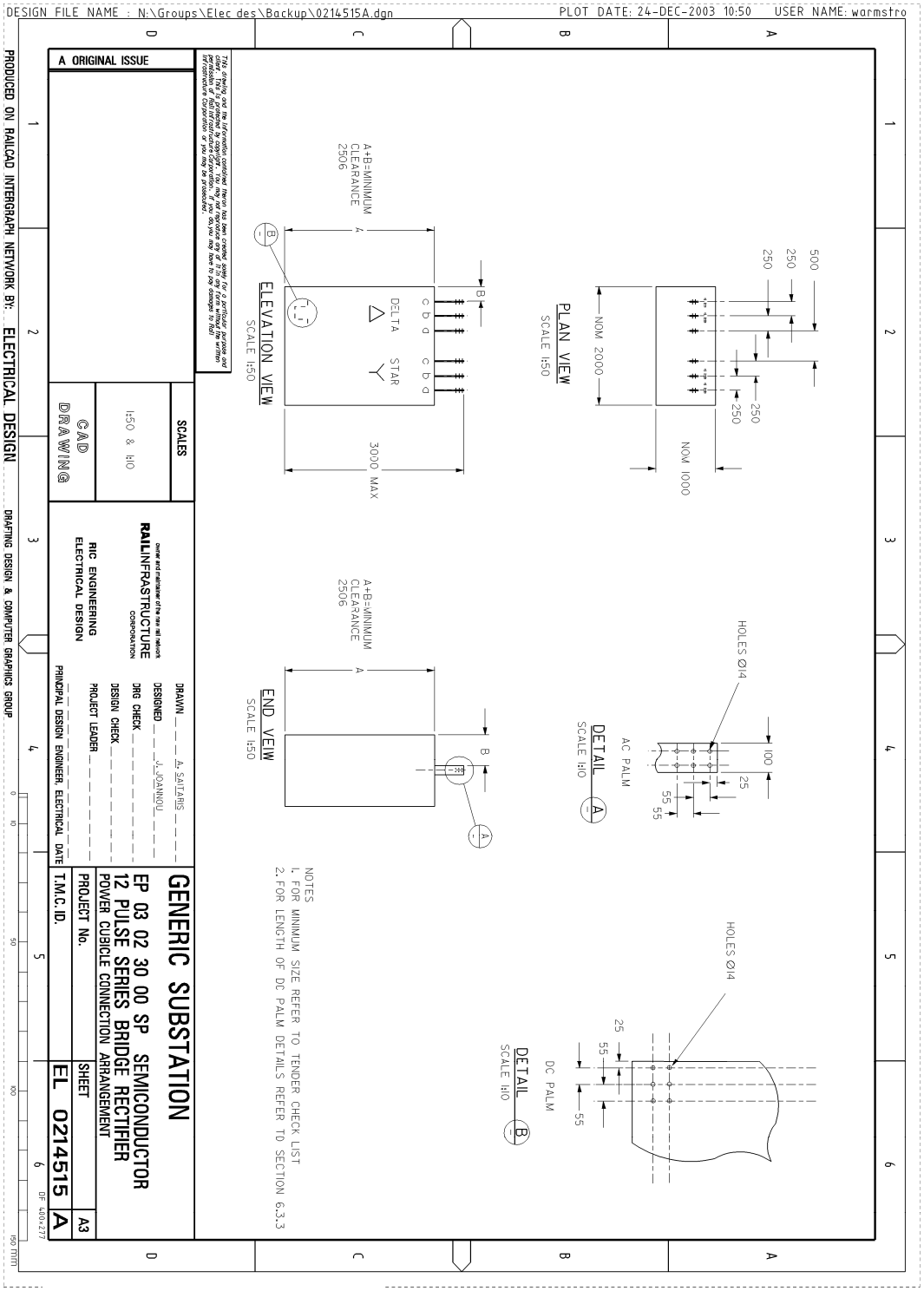
Appendix D Drawings