CONCRETE SLEEPER - DIRECT MOUNT

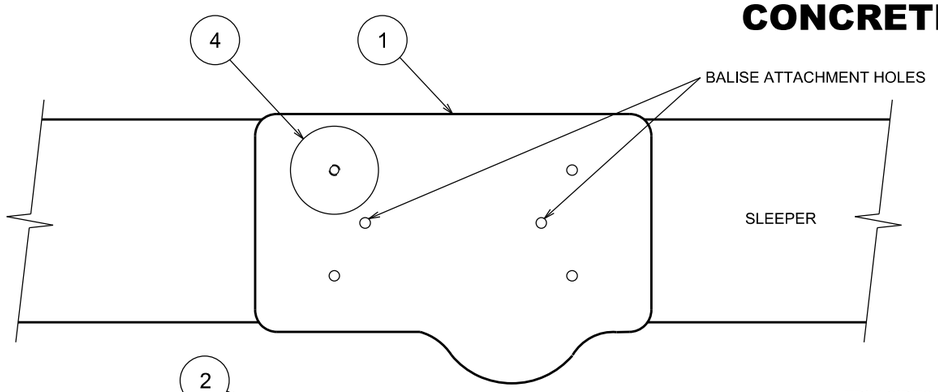

TOP VIEW

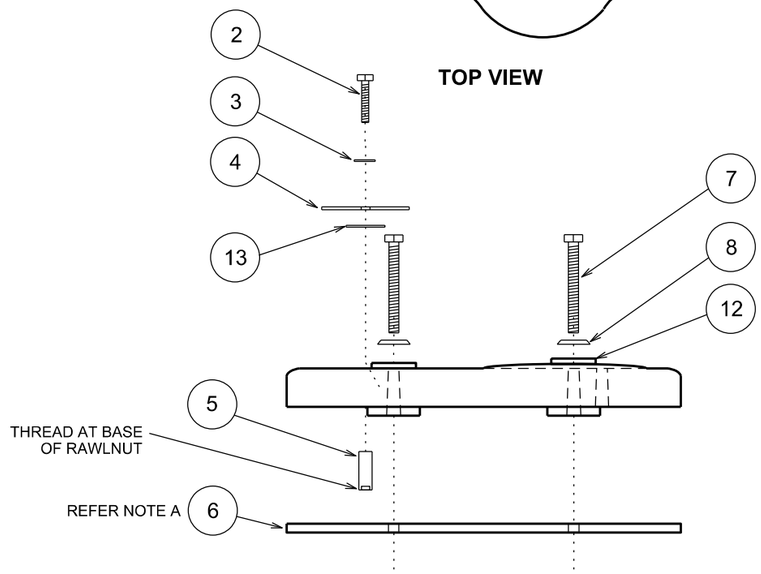

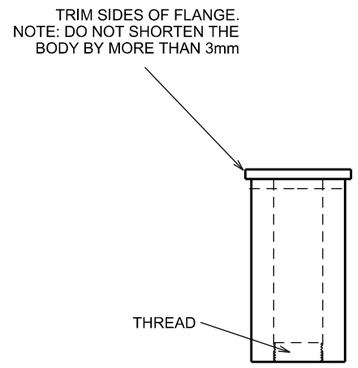

DETAIL A
RAWLNUT (ITEM 5)
NOTE B

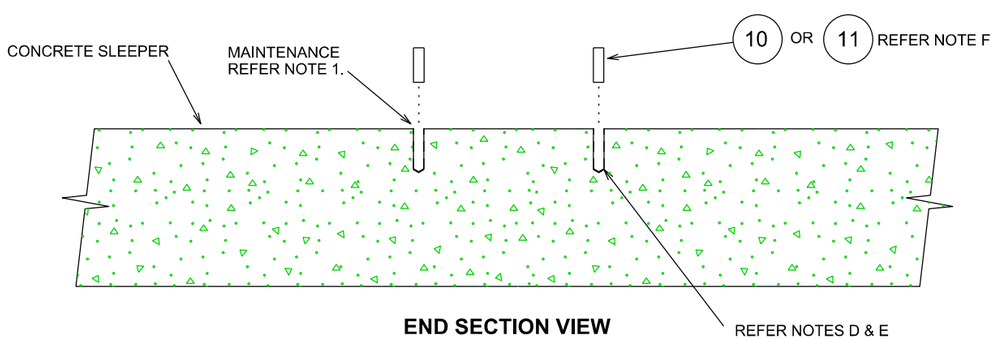

END SECTION VIEW

INSTALLATION NOTES:

A. WITH REFERENCE TO DWG. M05-503 SHEET 1 "BALISE POSITION AND ORIENTATION ACCEPTANCE DIAGRAM", WHERE THE BALISE CANNOT BE PLACED WITHIN THE REQUIRED VERTICAL RANGE, THEN A SECOND RUBBER PAD (ITEM 6) MAY BE FITTED. THIS WILL REQUIRE LONGER BOLTS M10 x 100mm, REPLACING ITEM 7 (M10 x 90mm).

B. INSTALL THE RAWLNUT (ITEM 5) INTO THE BALISE ID LABEL PLATE ATTACHMENT HOLE WHERE SHOWN.
NOTE THE FOLLOWING;-
- REFER TO THE TOP VIEW FOR ITEM 4 PLACEMENT HOLE.
- THE RAWLNUT FLANGE MUST BE REMOVED PRIOR TO FITTING. REFER TO DETAIL A.
- THE RAWLNUT IS INSTALLED FROM THE UNDERSIDE OF THE BALISE WITH THE THREAD AT THE BASE.

C. USING: RUBBER WASHER (ITEM 13), BOLT (ITEM 2) AND WASHER (ITEM 3), ATTACH THE BALISE ID PLATE (ITEM 4). TIGHTEN TO 6Nm.

D. DRILL TWO HOLES AT 90 DEGREES INTO THE SLEEPER. AVOID CRACKS WHEN POSITIONING ANCHOR HOLES. DRILL EITHER:
- HILTI ANCHOR, M12 x 43 DEPTH
- DYNASET ANCHOR, M12 x 40 DEPTH

E. BLOW OUT THE HOLES.

F INSERT THE ANCHORS (ITEM 10 or 11) INTO EACH HOLE USING APPROPRIATE SETTING TOOL AND MANUFACTURERS INSTALLATION GUIDE. NOTE: ONLY USE ITEM 11 WHERE CONCRETE IS DEGRADED OR FOR ANCHOR REPLACEMENT PURPOSES.

G. FIT BELLEVILLE WASHER (ITEM 8) AND FLAT WASHER (ITEM 12) TO EACH BOLT (ITEM 7).

H. INSERT THE BOLTS THROUGH THE BALISE ATTACHMENT HOLES (SEE TOP VIEW).

I. PLACE THE RUBBER PAD (ITEM 6) OVER THE BOLTS.

J. ADD AN APPROPRIATE QUANTITY OF LOCTITE (ITEM 9) TO EACH BOLT THREAD.

K. PLACE THE UNIT IN POSITION WHILE LINING UP THE HOLES AND TIGHTEN THE BOLTS USING A CALIBRATED TORQUE WRENCH SET AT 25Nm.

L. WITH REFERENCE TO DWG. M05-503 SHEET 1 "BALISE POSITION AND ORIENTATION ACCEPTANCE DIAGRAM", CHECK FINAL MEASUREMENTS AND RECORD EACH.

M. RECORD THE SERIAL NUMBER OF THE BALISE AND POSITION RELATIVE TO THE SIGNAL AND SHUNTING POINT.

N. USE 'SAIB' TOOL 084-001-01 TO REMOVE/INSTALL TAIL CABLE PLUG.

REMOVAL/MAINTENANCE NOTE:

1. AFTER REMOVING ALL ITEMS FROM THE SLEEPER, INSTALL A PLASTIC THREADED M10 x 16mm GRUB SCREW PLUG INTO EACH HOLE TO PREVENT DEBRIS ENTERING (REFER ITEM 14). WHEN RE-INSTALLING BOLTS ALWAYS APPLY LOCTITE (ITEM 9) TO EACH BOLT THREAD.

ITEM	DESCRIPTION		SUPPLIER	STOCK CODE	QUANTITY	PART NUMBER
14	NYLON GRUB SCREW M10 x 16 SLOTTED TOP (REFER REMOVAL NOTE '1')		BLACKWOODS	2057875	-	-
13	NEOPRENE RUBBER WASHER 35 O.D. x 10 I.D. x 1.0 TO 1.3 THICKNESS		INDUSTRIAL GASKETS	1001019936	1	1mm NEOPRENE
12	M12 316 S/S FLAT WASHER		BAKERS	1001019937	2	0375-6209
11	S/S PART HIS-RN M10x110 WITH MAX CHEMICAL OR RAMSET M10 INT.THREAD 316 S/S with S401C.	SEE NOTE F	HILTI RAMSET		2	HIS-RN OR 062960
10	HILTI DROP-IN ANCHOR M10 316 S/S OR RAMSET DYNASET M10 316 S/S	SEE NOTE D	HILTI RAMSET	1001019943	2	HKD-SR OR DSM10SS
9	LOCTITE 243 COMPOUND (USED AS COMBINED THREAD-LOCK / ANTI-SIEZE)		BAKERS		AS REQ'D	05201008
8	BELLEVILLE WASHER M10 STAINLESS STEEL		WDS	1001019939	2	
7	BOLT M10 X 90mm HEX HEAD 316 S/S	SEE NOTE A	WDS	-	2	BS16PCM100090
6	10mm RUBBER PAD SA47 (REFER DRG.No. M05-500)	SEE NOTE A	-	2092591	1	M05-500
5	RAWLNUT FLEXI-PLUG M8 (8300)			1001019940	1	RNT-M8/30
4	BALISE ID PLATE		-	-	1	M05-546
3	FLAT WASHER 5/16" 316 S/S 1-1/4" O.D. x 16g		HOBSON	1001019941	1	WR16P031125
2	BOLT M8 X 55mm HEX HEAD 316 S/S		-	1001019942	1	-
1	BALISE - CLASS A		ALSTOM	002088698	1	DTR0000273037

VERSION	DESCRIPTION	DATE	DRAWN	REVIEWED	VERIFIED	APPROVED
J	ADDED MISSING STOCK CODES	3.05.22	J.F.	J.F.	BS	SAV
H	ADDED SHEET 3 & LOCTITE NOTES	23/10/20	J.F.	J.F.	J.H.	G. DV
G	NOTE C: TORQUE REDUCED TO 6Nm. ITEM 5 PART REVISED.	21.09.17	J.F.	J.F.	J.H.	PjMcG
F	UPDATED NOTE RE: REMOVE FLANGE & M8 BOLT NOW 55mm	21.02.17	J.F.	J.F.		

GENERAL TOLERANCES
LINEAR:
< 1000 ± 0.5mm
> 1000 ± 3mm
RADIAL:
< 500 ± 0.25mm
> 500 ± 1.5mm
ANGULAR: ± 30'

This drawing and the information contained thereon have been created solely for a particular purpose and client. This is protected by copyright. You may not reproduce any of it in any form without the written permission of Transport for New South Wales. If you do, you may have to pay damages to Transport for New South Wales or you may be prosecuted.

©

ALL DIMENSIONS IN MILLIMETRES

AS 1100 THIRD ANGLE PROJECTION

NSW GOVERNMENT Transport for NSW

SIGNAL DESIGN

EDMS No. SG0178913

cad DO NOT AMEND MANUALLY

TITLE ALSTOM BALISE WITH CONCRETE MOUNT INSTALLATION DIAGRAM

DESIGNED	DRAWN	REVIEWED	VERIFIED	APPROVED
M.S.	G.B.	J.F.	A.N.	W.A.
DATE 06/06/11	SCALE N.T.S.	DRG. No. M05-502	SHEET 1 OF 3	REV. No. J

DF 390x277

File Plotted $$$$$$$$$$$$$DGN\SPECIFICATION\$$$$$$$$$$$$$$
Plot Date & Time $$$$$$$SYTIME$$$$$$
Plotted by $USERNAME$

CONCRETE SLAB - DIRECT MOUNT

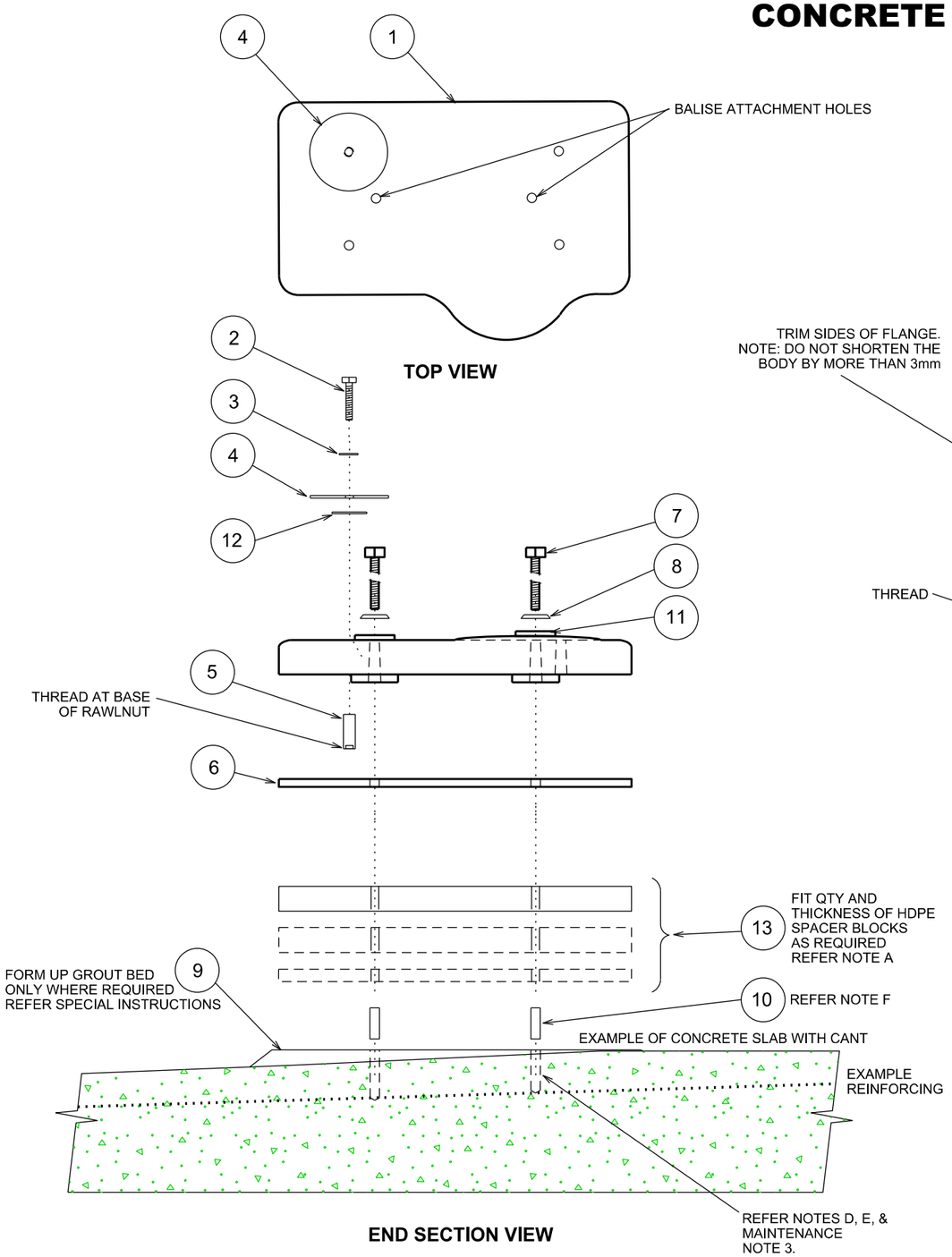

INSTALLATION NOTES:

A. REFER TO DWG. M05-503 SHEET 2 "BALISE POSITION AND ORIENTATION ACCEPTANCE DIAGRAM", TO DETERMINE THE REQUIRED MOUNTING HEIGHT OF THE BALISE & BOLT LENGTH.

B. INSTALL THE RAWLNUT (ITEM 5) INTO THE BALISE ID LABEL PLATE ATTACHMENT HOLE WHERE SHOWN.
NOTE THE FOLLOWING;-
- REFER TO THE TOP VIEW FOR ITEM 4 PLACEMENT HOLE.
- THE RAWLNUT FLANGE MUST BE REMOVED PRIOR TO FITTING. REFER TO DETAIL A.
- THE RAWLNUT IS INSTALLED FROM THE UNDERSIDE OF THE BALISE WITH THE THREAD AT THE BASE.

C. USING: RUBBER WASHER (ITEM 12), BOLT (ITEM 2) AND WASHER (ITEM 3), ATTACH THE BALISE ID PLATE (ITEM 4). TIGHTEN TO 6Nm.

D. SLAB: DRILL TWO HOLES INTO THE CONCRETE AT 90 DEGREES TO THE TOP OF THE PLANE OF THE RAIL HEADS.

E. BLOW OUT THE HOLES.

F INSERT THE ANCHORS (ITEM 10) INTO EACH HOLE IN ACCORDANCE WITH MANUFACTURERS INSTALLATION GUIDE.

G. FIT BELLEVILLE WASHER (ITEM 8) AND FLAT WASHER (ITEM 11) TO EACH BOLT (ITEM 7).

H. INSERT THE BOLTS THROUGH THE BALISE ATTACHMENT HOLES (SEE TOP VIEW).

I. PLACE SPACER BLOCKS (ITEM 13, AS REQUIRED) & RUBBER PAD (ITEM 6) OVER THE BOLTS.

J. ADD AN APPROPRIATE QUANTITY OF LOCTITE (ITEM 14) TO THE END OF EACH BOLT THREAD.

K. PLACE THE UNIT IN POSITION WHILE LINING UP THE HOLES AND TIGHTEN THE BOLTS USING A CALIBRATED TORQUE WRENCH SET AT 25Nm.

L. WITH REFERENCE TO DWG. M05-503 SHEET 2 "BALISE POSITION AND ORIENTATION ACCEPTANCE DIAGRAM", CHECK FINAL MEASUREMENTS AND RECORD EACH.

M. RECORD THE SERIAL NUMBER OF THE BALISE AND POSITION RELATIVE TO THE SIGNAL AND SHUNTING POINT.

N. USE 'SAIB' TOOL 084-001-01 TO REMOVE/INSTALL TAIL CABLE PLUG (WHERE FITTED).

SPECIAL INSTRUCTIONS:

1. REFER TO THE ASA LEAD ENGINEERS SIGNALLING & CIVIL FOR BALISE MOUNTING RESOLUTION WHERE:
- THE SLAB REINFORCING IS LESS THAN 210mm BELOW BALISE REFERENCE MARK (BRM) WITH BRM LOCATED AS HIGH AS PERMISSABLE. FOR TUNNELS, ASSUME 50 TO 60mm CONCRETE COVER, UNLESS KNOWN OTHERWISE.
- SLAB IS CANTED OUT OF PARALLEL WITH THE TOP OF THE RAILS & EXCEEDING THE LIMITS DEFINED ON DWG. M05-503 SHEET 2, AND CANNOT BE RESOLVED WITH A GROUT BED LESS THAN 50mm THICK.
- WHERE A DRAINAGE DEPRESSION OR CHANNEL EXISTS IN THE FOUR FOOT.

2. NOTE: THE USE OF CHEMICAL ANCHORS OR GROUT REQUIRES A CURE TIME DEPENDING ON AMBIENT CONDITIONS. AS SUCH, THE BALISE INSTALLATION WILL REQUIRE A TWO STAGE APPROACH.

3. NOTE: WHEN REMOVING THE BALISE FROM THE SLAB FOR MAINTENANCE REASONS, INSTALL A PLASTIC THREADED M12 GRUB SCREW, PLUG OR SHORT BOLT INTO EACH HOLE TO PREVENT DEBRIS ENTERING. WHEN RE-INSTALLING BOLTS ALWAYS APPLY LOCTITE (ITEM 14) TO EACH BOLT THREAD.

ITEM	DESCRIPTION	SUPPLIER	STOCK CODE	QUANTITY	PART NUMBER
14	LOCTITE 243 COMPOUND (USED AS COMBINED THREAD-LOCK / ANTI-SIEZE)	BAKERS	-	AS REQ'D	05201008
13	SPACER BLOCK(S). REFER TO DWG. M05-559	-	-	AS REQ'D	-
12	NEOPRENE RUBBER WASHER 35 O.D. x 10 I.D. x 1.0 TO 1.3 THICKNESS	INDUSTRIAL GASKETS	1001019936	1	1mm NEOPRENE
11	M12 316 S/S FLAT WASHER	BAKERS	1001019937	2	0375-6209
10	S/S ANCHOR PART HIS-RN M12x125. USE WITH 'MAX' CHEMICAL	HILTI	-	2	00258026
9	MORTAR/GROUT COMPOUND (PREPARE SURFACE AS PER MAKERS INSTRUCTIONS)	PARCHEM	-	AS REQ'D	CONBEXTRA GP
8	BELLEVILLE WASHER M12 STAINLESS STEEL	WDS	1001019938	2	-
7	M12 BOLT 316 STAINLESS STEEL (LENGTH TO SUIT)	-	-	2	-
6	10mm RUBBER PAD SA47 (REFER DRG.No. M05-500)	-	2092591	1	M05-500
5	RAWLNUT FLEXI-PLUG M8 (8300)	-	1001019940	1	RNT-M8/30
4	BALISE ID PLATE	-	-	1	M05-546
3	FLAT WASHER 5/16" 316 S/S 1-1/4" O.D. x 16g	HOBSON	1001019941	1	WR16P031125
2	BOLT M8 X 55mm HEX HEAD 316 S/S	-	1001019942	1	-
1	BALISE - CLASS A	ALSTOM	002088698	1	DTR0000273037

VERSION	DESCRIPTION	DATE	DRAWN	REVIEWED	VERIFIED	APPROVED
G	ADDED MISSING STOCK CODES	3.05.22	J.F.	J.F.	BS	GDV
F	ADDED SHEET 3 & LOCTITE NOTE. UPDATED SPECIAL INSTRUCTIONS	23/10/20	J.F.	J.F.	J.H.	G. DV
E	NOTE C: TORQUE REDUCED TO 6Nm. ITEM 5 PART REVISED.	21.09.17	J.F.	J.F.	J.H.	PjMcG
D	UPDATED NOTE RE: REMOVE FLANGE & M8 BOLT NOW 55mm	21.02.17	J.F.	J.F.		

GENERAL TOLERANCES
LINEAR:
< 1000 ± 0.5mm
> 1000 ± 3mm
RADIAL:
< 500 ± 0.25mm
> 500 ± 1.5mm
ANGULAR: ± 30'

This drawing and the information contained thereon have been created solely for a particular purpose and client. This is protected by copyright. You may not reproduce any of it in any form without the written permission of Transport for New South Wales. If you do, you may have to pay damages to Transport for New South Wales or you may be prosecuted. ©

ALL DIMENSIONS IN MILLIMETRES

AS 1100 THIRD ANGLE PROJECTION

NSW GOVERNMENT Transport for NSW

SIGNAL DESIGN

EDMS No. SG0406124

cad DO NOT AMEND MANUALLY

TITLE ALSTOM BALISE WITH CONCRETE MOUNT INSTALLATION DIAGRAM

DESIGNED	DRAWN	REVIEWED	VERIFIED	APPROVED
J.F.	J.F.	J.F.	A.N.	W.A.
DATE 09/01/13	SCALE N.T.S.	DRG. No. M05-502	SHEET 2 OF 3	REV. No. G

DF 390x277

File Plotted $$$$$$$$$$$$$DGN\$SPECIFICATION\$$$$$$$$$$$$$$
Plot Date & Time $$$$$$$SYTIME$$$$$$
Plotted by $USERNAME$

BALISE MOUNTING OVER DRAINAGE CHANNEL IN CITY UNDERGROUND

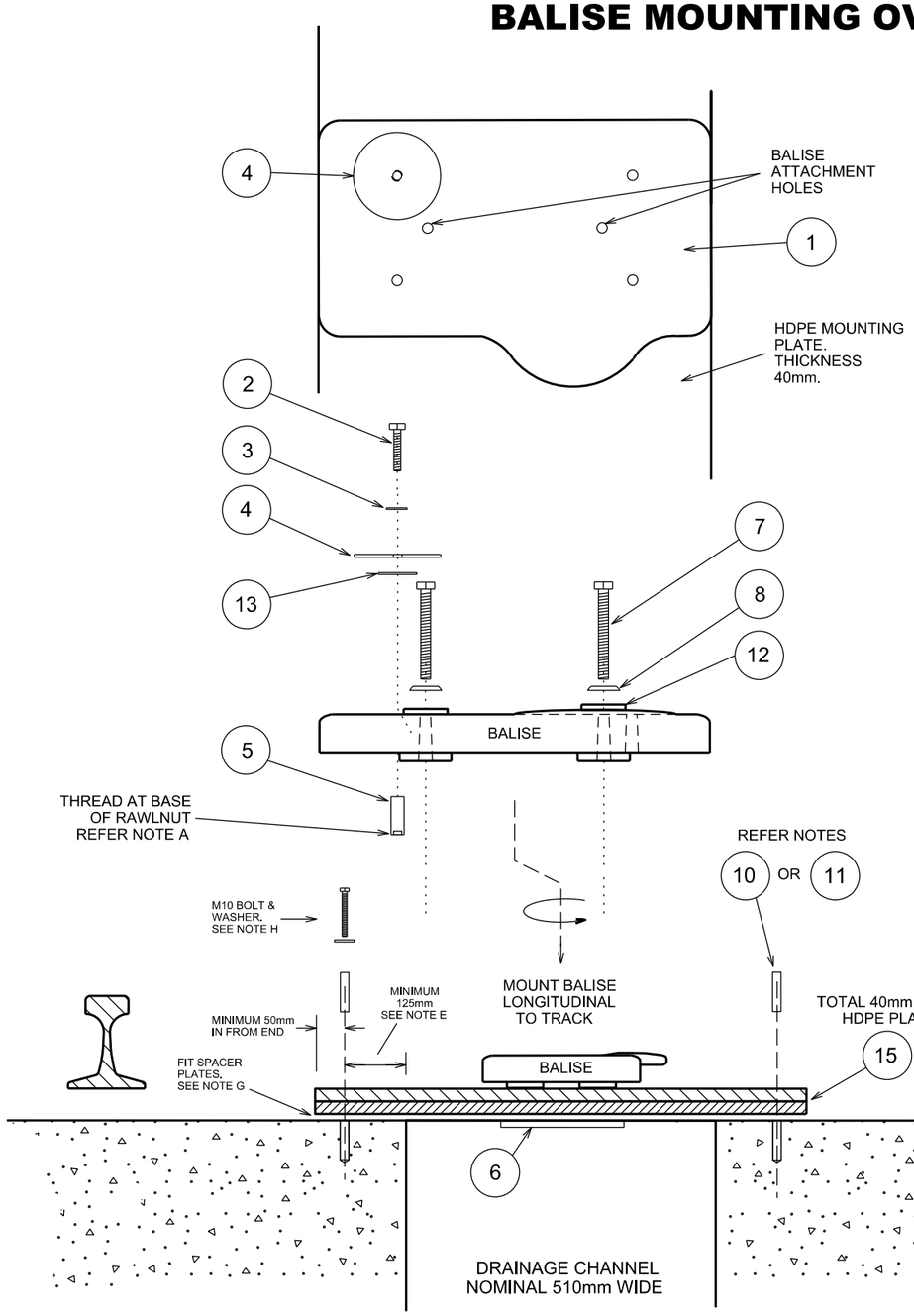

TUNNEL SLAB TRACK END SECTION VIEW

INSTALLATION NOTES:

A. INSTALL THE RAWLNUT (ITEM 5) INTO THE BALISE & THE BALISE ID PLATE (ITEM 4) IN ACCORDANCE WITH SHEETS 1 & 2 INSTRUCTIONS.

B. THE BALISE IS TO BE MOUNTED CENTRAL TO THE TRACK USING SAME HDPE PLATE MATERIAL AS SPECIFIED ON DWG. M05-545 SHEET 1. NOTE: THE HDPE PLATE SHOWN ON DRAWING M05-545 IS NOT SUFFICIENTLY WIDE FOR THIS APPLICATION. THE PLATE FOR THIS APPLICATION TO BE TOTAL OF 40mm THICK, WIDTH 450mm & LENGTH TO SPAN DRAINAGE CHANNEL AS DESCRIBED FURTHER HEREIN. PLATE MAY NEED TO BE CUT TO LENGTH ON SITE USING A SAW (THIS MATERIAL CAN BE CUT WITH A HAND SAW). DRILL TWO MOUNTING HOLES (SUIT ANCHOR BOLT/SCREW) EACH END ABOUT 100mm IN FROM THE SIDES.

C. TRIM 450mm WIDE SLOT IN THE EXISTING GRP 35mm THICK WALKWAY MESH (WHERE MESH FITTED) USING A SAW (THIS MATERIAL CAN BE CUT WITH A HAND SAW) TO ALLOW SPACE FOR THE HDPE PLATE WITH AN AIR GAP CLEARANCE OF ~10mm EACH SIDE.

D. RE-SECURE THE EXISTING WALKWAY MESH EACH SIDE OF THE OPENING OVER THE TRENCH, USING THE SAME CONCRETE FIXINGS AS PER EXISTING TYPE USED ON THE MESH IN THE TUNNEL. IF MESH NEEDS REPLACING, USE THE SAME MESH PRODUCT OR EQUIVALENT (SAME COMPOSITION, SIZE AND COLOUR) AS EXISTING.

E. FIX HDPE PLATE TO THE CONCRETE SLAB AS FOLLOWS:
- DRILL TWO HOLES AT EACH END OF THE HDPE PLATE(S) INTO THE CONCRETE SLAB .
- HOLES ARE TO BE AT LEAST 125mm IN FROM THE EDGE OF THE DRAINAGE CHANNEL (150mm PREFERRED WHERE POSSIBLE) TO AVOID CRACKS IN THE CONCRETE.
  DRILL FOR EITHER:
  - HILTI ANCHOR, M12 x 43 DEPTH
  - DYNASET ANCHOR, M12 x 40 DEPTH

F. BLOW DUST OUT OF THE HOLES AND INSERT THE ANCHORS (ITEM 10 or 11) INTO EACH HOLE IN THE CONCRETE USING THE APPROPRIATE SETTING TOOL AND ACCORDING TO MANUFACTURERS INSTALLATION GUIDE. NOTE: ONLY USE ITEM 11 WHERE CONCRETE IS DEGRADED OR FOR ANCHOR REPLACEMENT PURPOSES.

G. PLACE STAINLESS STEEL SQUARE SPACER PLATES/WASHERS (NOT LISTED THIS DWG.) AT EACH BOLT FIXING POINT TO ENSURE THAT THE HDPE PLATE IS ~15mm ABOVE SLAB.

H. APPLY AN APPROPRIATE QTY. OF LOCTITE (ITEM 9) TO EACH BOLT THREAD (BOLTS NOT LISTED) & SECURE THE HDPE PLATE IN ACCORDANCE WITH INSTRUCTIONS ON SHEETS 1 & 2. USE FOUR x M10 STAINLESS STEEL FLAT WASHERS AND HEX HEAD BOLTS (NOT LISTED THIS DWG.) LENGTH TO SUIT PLATE, SPACER WASHERS AND ANCHORS.

I. WHERE THE BALISE DESIGN POSITION IS LOCATED OVER A LATERAL TIMBER SPANNING THE CHANNEL, USE COACH SCREWS TO FIX THE BALISE THROUGH THE HDPE PLATE INTO THE TIMBER IN ACCORDANCE WITH DWG. M05-501 GENERAL INSTRUCTIONS FOR TIMBER SLEEPERS. SELECT APPROPRIATE LENGTH SCREW & PRE-DRILL TIMBER SO AS NOT TO SPLIT TIMBER.
WHERE THE BALISE DESIGN POSITION IS NOT OVER A LATERAL TIMBER, FIX THE BALISE TO THE HDPE PLATE USING STAINLESS STEEL BRACKET ITEM 2 IN ACCORDANCE WITH DWG M05-545. NOTE: ALWAYS APPLY LOCTITE (ITEM 9) TO EACH BOLT THREAD BEFORE FITTING.

J. FIT BELLEVILLE WASHER (ITEM 8) AND FLAT WASHER (ITEM 12) TO EACH BALISE BOLT OR SCREW.

K. PLACE THE BALISE IN POSITION WHILE LINING UP THE HOLES AND TIGHTEN THE BOLTS/SCREWS. WHERE BOLTS FITTED, USE A CALIBRATED TORQUE WRENCH SET AT 25Nm.

L. WITH REFERENCE TO DWG. M05-503 SHEET 1 "BALISE POSITION AND ORIENTATION ACCEPTANCE DIAGRAM", CHECK FINAL MEASUREMENTS AND RECORD EACH. WHERE THE BALISE WOULD NOT BE PLACED WITHIN THE REQUIRED VERTICAL RANGE, THEN HDPE SPACER PLATE(S) MAY BE REQUIRED. MULTIPLE SPACER(S) MAY BE FITTED TO BRING THE BALISE UP INTO THE REQUIRED HEIGHT RANGE. THIS WILL REQUIRE LONGER BOLTS OR COACH SCREWS.

M. RECORD THE SERIAL NUMBER OF THE BALISE.

N. WHERE A CABLE IS FITTED TO A BALISE, USE 'SAIB' TOOL 084-001-01 TO REMOVE/INSTALL TAIL CABLE PLUG.

O. **MAINTENANCE NOTE**: AFTER REMOVING ALL ITEMS FROM THE SLAB, INSTALL A PLASTIC THREADED M10 x 16mm GRUB SCREW PLUG INTO EACH HOLE TO PREVENT DEBRIS ENTERING (REFER ITEM 14). WHEN INSTALLING OR RE-INSTALLING BOLTS ALWAYS APPLY LOCTITE (ITEM 9) TO EACH BOLT THREAD.

ITEM	DESCRIPTION	SUPPLIER	STOCK CODE	QUANTITY	PART NUMBER
15	HDPE PLATE (2 X 20mm OR 1 X 40mm) THICK. REFER DWG. M05-545 FOR MATERIAL SPEC.	-	-	-	REF. M05-545
14	NYLON GRUB SCREW M10 x 16 SLOTTED TOP (REFER REMOVAL NOTE O)	BLACKWOODS	2057875	-	-
13	NEOPRENE RUBBER WASHER 35 O.D. x 10 I.D. x 1.0 TO 1.3 THICKNESS	INDUSTRIAL GASKETS	1001019936	1	1mm NEOPRENE
12	M12 316 S/S FLAT WASHER	BAKERS	1001019937	2	0375-6209
11	S/S PART HIS-RN M10x110 WITH MAX CHEMICAL OR RAMSET M10 INT.THREAD 316 S/S with S401C. SEE NOTE F	HILTI RAMSET	-	2	HIS-RN OR 062960
10	HILTI DROP-IN ANCHOR M10 316 S/S OR RAMSET DYNASET M10 316 S/S SEE NOTE E	HILTI RAMSET	1001019943	2	HKD-SR OR DSM10SS
9	LOCTITE 243 COMPOUND (USED AS COMBINED THREAD-LOCK / ANTI-SIEZE)	BAKERS	-	AS REQ'D	05201008
8	BELLEVILLE WASHER M10 STAINLESS STEEL	WDS	1001019939	2	
7	HEX HEAD BOLT M10 316 S/S OR 12mm GALV COACH SCREW, LENGTH AS REQIRED.	-	-	2	-
6	BALISE ATTACHMENT PLATES (NOT REQ'ED WHERE COACH SCREWS USED IN TIMBER).	-	-	2	M05-545 ITEM 2
5	RAWLNUT FLEXI-PLUG M8 (8300)		1001019940	1	RNT-M8/30
4	BALISE ID PLATE	-	-	1	M05-546
3	FLAT WASHER 5/16" 316 S/S 1-1/4" O.D. x 16g	HOBSON	1001019941	1	WR16P031125
2	BOLT M8 X 55mm HEX HEAD 316 S/S	-	1001019942	1	-
1	BALISE - CLASS A	ALSTOM	002088698	1	DTR0000273037

VERSION	DESCRIPTION	DATE	DRAWN	REVIEWED	VERIFIED	APPROVED
B	ADDED MISSING STOCK CODES	3.05.22	J.F.	J.F.	BC	GDV

GENERAL TOLERANCES
LINEAR:
< 1000 ± 0.5mm
≥ 1000 ± 3mm
RADIAL:
< 500 ± 0.25mm
≥ 500 ± 1.5mm
ANGULAR: ± 30'

NSW GOVERNMENT | Transport for NSW

TITLE ALSTOM BALISE WITH CONCRETE MOUNT INSTALLATION DIAGRAM

DESIGNED	DRAWN	REVIEWED	VERIFIED	APPROVED
J.F.	J.F.	J.F.	A.N.	G.DV
DATE 23/10/20	SCALE N.T.S.	DRG. No. M05-502	SHEET 3 OF 3	REV. No. B

SIGNAL DESIGN

EDMS No. SG0791428

cad DO NOT AMEND MANUALLY

This drawing and the information contained thereon have been created solely for a particular purpose and client. This is protected by copyright. You may not reproduce any of it in any form without the written permission of Transport for New South Wales. If you do, you may have to pay damages to Transport for New South Wales or you may be prosecuted. ©

ALL DIMENSIONS IN MILLIMETRES

AS 1100 THIRD ANGLE PROJECTION

File Plotted $$$$$$$$$$$$$DGN\SPECIFICATION\$$$$$$$$$$$$$$

Plot Date & Time $$$$$$$$$YTIME$$$$$$$

Plotted by $USERNAME$

DF 390*277