Superseded by TS 03610:1.0, 18/01/2022

Transport Asset Standards Authority

For queries regarding this document
standards@transport.nsw.gov.au
www.transport.nsw.gov.au

Technical Note – TN 033: 2018

Issue date: 21 December 2018

Effective date: 21 December 2018

Subject: Amendments to T HR TR 25000 ST *Buffer Stops*, version 1.0

This technical note is issued by the Asset Standards Authority (ASA) to notify amendments to T HR TR 25000 ST *Buffer stops*, v1.0.

1. Background

This technical note explains the speed related risk criteria to be considered during the buffer stop design stage. It provides amendments to the maximum allowable deceleration rate for lighter weight rolling stock while complying with the allowable impact force requirements.

This technical note also provides amended maximum allowable impact force that the newer generation trains can accommodate without any damage. These figures shall be used by all parties undertaking review or design of new buffer stops across the Metropolitan Rail Area.

2. Section 12 Risk assessment

Insert the following after the third paragraph:

In order to establish the nature and extent of damage upon collision, the risk assessment for a buffer stop design shall consider the possibility of a train travelling at a speed higher than the design speed and the expected consequential damage upon collision. In the SFAIRP justification, an indication shall be provided to indicate the following:

- Up to the design speed that no permanent damage will occur to the train. The buffer stop will be fully recoverable, either automatically or within simple maintenance actions.
- Up to the 'worst case speed' that the damage will be easily reparable; for example, easy repair or replacement of buffer stop parts.

© State of NSW through Transport for NSW 2018

Superseded by TS 03610:1.0, 18/01/2022

- Beyond the worst case speed, irreparable damage is expected to the buffer stop; however the collision damage is expected to be contained to the immediate vicinity as far as practicable.

Add the following dot point under additional safety measures as a last dot point:

- Providing anticlimbers to reduce the risk of train overriding the buffer stop upon collision at a speed above the design speed.

3. Section 13.4 Retardation and deceleration rates

Delete the second paragraph and replace with the following:

For the range of masses specified in Section 13.1, lighter rolling stock can decelerate at a rate of up to 2.8 m/sec^2. However maximum deceleration rate for the highest mass train at the location shall not be greater than 2.5 m/s^2, subject to compliance with Section 13.5.

4. Section 13.5 Maximum force to minimise train damage

Delete the contents in this section in its entirety and replace with the following:

The buffer stop shall be designed to enact a maximum reactive force of 2000 kN on modern rolling stock which utilises their collision energy management systems (CEMS). For the design speed, this force shall not be exceeded at any point during the stroke/travel of the buffer stop.

Where operational requirements deem that older generation rolling stock not utilising CEMS will be operated in these locations, then the Lead Rolling Stock Engineer, ASA shall be consulted to undertake a risk assessment to determine whether the level of consequential damage, if any, to the rolling stock and its occupants is acceptable.

5. Section 13.6 Coupler compatibility

The contents in this section are currently being updated to include coupling capability of the buffer stop that caters to all rolling stock. This will be notified in the future.

In the interim, contact the Lead Track Engineer for any information related to this section.

© State of NSW through Transport for NSW 2018

Superseded by TS 03610:1.0, 18/01/2022

Authorisation:

	Technical content prepared by	Endorsed by	Checked and approved by	Interdisciplinary coordination checked by	Authorised for release
Signature					
Date					
Name	Navneet Kaur	Michael Uhlig	John Paff	Peter McGregor	Jagath Peiris
Position	Senior Engineer – Track, ASA	Lead Rolling Stock Engineer, ASA	Lead Track Engineer, ASA	A/Chief Engineer - ASA	Director Network Standards and Services

© State of NSW through Transport for NSW 2018

Superseded by TS 03610:1.0, 18/01/2022

T HR TR 25000 ST

Standard

Buffer Stops

Version 1.0

Issued date: 10 July 2017

© State of NSW through Transport for NSW 2017

Superseded by TS 03610:1.0, 18/01/2022

Important message

This document is one of a set of standards developed solely and specifically for use on Transport Assets (as defined in the Asset Standards Authority Charter). It is not suitable for any other purpose.

The copyright and any other intellectual property in this document will at all times remain the property of the State of New South Wales (Transport for NSW).

You must not use or adapt this document or rely upon it in any way unless you are providing products or services to a NSW Government agency and that agency has expressly authorised you in writing to do so. If this document forms part of a contract with, or is a condition of approval by a NSW Government agency, use of the document is subject to the terms of the contract or approval. To be clear, the content of this document is not licensed under any Creative Commons Licence.

This document may contain third party material. The inclusion of third party material is for illustrative purposes only and does not represent an endorsement by NSW Government of any third party product or service.

If you use this document or rely upon it without authorisation under these terms, the State of New South Wales (including Transport for NSW) and its personnel does not accept any liability to you or any other person for any loss, damage, costs and expenses that you or anyone else may suffer or incur from your use and reliance on the content contained in this document. Users should exercise their own skill and care in the use of the document.

This document may not be current and is uncontrolled when printed or downloaded. Standards may be accessed from the Asset Standards Authority website at www.asa.transport.nsw.gov.au

© State of NSW through Transport for NSW 2017

Superseded by TS 03610:1.0, 18/01/2022

Standard governance

Owner: Lead Track Engineer, Asset Standards Authority

Authoriser: Chief Engineer , Asset Standards Authority

Approver: Executive Director, Asset Standards Authority on behalf of the ASA Configuration Control Board

Document history

Version	Summary of Changes
1.0	First issue

For queries regarding this document,
please email the ASA at
standards@transport.nsw.gov.au
or visit www.asa.transport.nsw.gov.au

© State of NSW through Transport for NSW

Superseded by TS 03610:1.0, 18/01/2022

Preface

The Asset Standards Authority (ASA) is a key strategic branch of Transport for NSW (TfNSW). As the network design and standards authority for NSW Transport Assets, as specified in the *ASA Charter*, the ASA identifies, selects, develops, publishes, maintains and controls a suite of requirements documents on behalf of TfNSW, the asset owner.

The ASA deploys TfNSW requirements for asset and safety assurance by creating and managing TfNSW's governance models, documents and processes. To achieve this, the ASA focuses on four primary tasks:

- publishing and managing TfNSW's process and requirements documents including TfNSW plans, standards, manuals and guides
- deploying TfNSW's Authorised Engineering Organisation (AEO) framework
- continuously improving TfNSW's Asset Management Framework
- collaborating with the Transport cluster and industry through open engagement

The AEO framework authorises engineering organisations to supply and provide asset related products and services to TfNSW. It works to assure the safety, quality and fitness for purpose of those products and services over the asset's whole-of-life. AEOs are expected to demonstrate how they have applied the requirements of ASA documents, including TfNSW plans, standards and guides, when delivering assets and related services for TfNSW.

Compliance with ASA requirements by itself is not sufficient to ensure satisfactory outcomes for NSW Transport Assets. The ASA expects that professional judgement be used by competent personnel when using ASA requirements to produce those outcomes.

About this document

This standard specifies the design requirements for buffer stops. This standard supersedes RailCorp standard ESC 361 *Buffer Stops*, version 2.3.

This standard is a first issue.

© State of NSW through Transport for NSW

Superseded by TS 03610:1.0, 18/01/2022

Table of contents

1. Introduction ... 7
2. Purpose ... 7
2.1. Scope ... 7
2.2. Application ... 7
3. Reference documents ... 8
4. Terms and definitions ... 9
5. General requirements ... 10
5.1. Safety requirements ... 10
5.2. Environmental and sustainability requirements ... 10
5.3. Heritage requirements ... 11
6. Applicable design standards ... 11
7. Approved configurations ... 11
7.1. Energy absorbing ... 11
7.2. Fixed ... 14
7.3. Lower order protection devices ... 15
7.4. Replacement criteria ... 16
8. Approved materials ... 16
9. Clearances ... 17
10. Type approval requirements ... 17
11. Location criteria ... 17
11.1. Buffer stops within constrained locations ... 18
11.2. Temporary buffer stops ... 18
12. Risk assessment ... 18
13. Design criteria – passenger train buffer stops ... 20
13.1. Train mass ... 20
13.2. Train speed ... 20
13.3. Track requirements ... 21
13.4. Retardation and deceleration rates ... 22
13.5. Maximum force to minimise train damage ... 23
13.6. Coupler compatibility ... 23
13.7. Override protection ... 25
14. Design criteria – non-passenger train buffer stops ... 25
14.1. Train mass ... 25
14.2. Train speed ... 25
14.3. Track requirements ... 26
14.4. Retardation and deceleration rates ... 26
14.5. Coupling capability ... 26
15. Additional overrun protection ... 26

© State of NSW through Transport for NSW

Superseded by TS 03610:1.0, 18/01/2022

15.1. General guidance on the design of end impact walls 27
16. Protective coatings 27
16.1. Steel buffer stops 27
16.2. Timber buffer stops 28
16.3. Stop blocks 28
17. Drawing standards 28
18. Light signal 28
19. Electrical isolation 28
20. OHW requirements 29
20.1. Clearances 29
20.2. Overhead wiring termination insulator 29
21. Construction 29
22. Maintenance 30
23. Decommissioning or disposal 30

Superseded by TS 03610:1.0, 18/01/2022

1. Introduction

Buffer stops are infrastructure items at the end of rail tracks or sidings. They are used to prevent rolling stock from running off the end of the track or colliding with adjacent structures and reduce the impact forces to minimise damage to rolling stock.

2. Purpose

This document specifies the design, installation, refurbishment, maintenance, decommissioning and disposal requirements for buffer stops.

2.1. Scope

This standard specifies the performance requirements for the life cycle of buffer stops from design to disposal.

The purpose of buffer stops is to safely stop an overrunning train, preventing serious damage to the infrastructure and with minimal injury to passengers and staff. They can also work to minimise damage to rolling stock in the event of a low speed overrun. Buffer stops, along with other protection mechanisms, form a system that prevents runaway rolling stock from causing damage. However, it is not anticipated that buffer stops alone would be fully effective when speeds above 25 km/h occur.

2.2. Application

This standard applies to new and reconfigured existing buffer stops for passenger and freight trains on all terminal roads and sidings.

This standard provides buffer stop design criteria to an Authorised Engineering Organisation (AEO) engaged in the provision of services relating to heavy rail infrastructure. Compliance with the requirements in this standard will not, by itself, be sufficient to ensure that satisfactory outcomes will be produced. Personnel providing services based on this standard are required to possess appropriate expertise and competence related to the matters under consideration.

If, when using the standard, it is considered that the intent of stated requirements is not clear a clarification should be sought from the Lead Track Engineer, Assets Standard Authority (ASA).

© State of NSW through Transport for NSW

Superseded by TS 03610:1.0, 18/01/2022

3. Reference documents

The following documents are cited in the text. For dated references, only the cited edition applies. For undated references, the latest edition of the referenced document applies.

Australian standards

AS 1720 (all parts) Timber structures

AS 2700 Colour standards for general purposes

AS 3600 Concrete structures

AS 4100 Steel structures

Transport for NSW standards

ESC 215 Transit Space

ESC 302 Structures Defect Limits

ESG 100.1 Signal Design Principles – Signals

SPC 301 Structures Construction

SPG 0706 Installation of Trackside Equipment

SPG 1571 Light Signals

T HR RS 00100 ST RSU 100 Series – Minimum Operating Standards for Rolling Stock – General Interface Standards

T HR EL 08001 ST Safety Screens and Barriers for 1500 V OHW Equipment

TMC 203 Track Inspection

T MU AM 01003 ST Development of Technical Maintenance Plans

T MU MD 00005 GU Type Approval of Products

T MU MD 00006 ST Engineering Drawings and CAD Requirements

T MU MD 20002 ST Risk Criteria for Use by Organisations Providing Engineering Services

T MU MD 20001 ST System Safety Standard for New or Altered Assets

T MU RS 01000 ST Structural Integrity and Crashworthiness of Passenger Rolling Stock

Legislation

Heritage Act 1977

Work Health Safety Act 2011

© State of NSW through Transport for NSW

Superseded by TS 03610:1.0, 18/01/2022

Transport for NSW drawings

CV0255592 Standard Buffer Stop for Terminal Roads

FL0296161 Double Deck Motor Car – Coupler & Draftgear Arrangement

FL0305691 Tangara Suburban Cars Control Trailer Car No 2 End Full-Auto Coupler Assembly with Cables, Piping & Tread Plate

FL0309046 General Arrangement Motor Car Interurban D/D Cars

FL0333614 Alliance Automatic Coupler 10A Contour Bottom Operated

FL0335605 Automatic Coupler for Xplorer & Endeavour Railcars (ABB)

FL0344811 Sharon Interlocking Coupler Bottom Operated for Double Deck Intercity Cars

FL0355332 Automatic Coupler for Appln

FL0355339 Automatic Coupler

FL 0586990 Hunter Railcar HM & HMT Car Underframe Arrangement Automatic Coupler Arrangement

Note: These drawings are available on request from planroom@transport.nsw.gov.au.

Other reference documents

Office of Environment and Heritage, 2005, State Agency Heritage Guide – Management of Heritage Assets by NSW Government Agencies, publication number HO05/01

NSW State Heritage Register

TfNSW Control of Trains Approaching Catch Points, Buffer Stops and Short Overlaps

4. Terms and definitions

The following terms and definitions apply in this document:

AEO Authorised Engineering Organisation

ASA Asset Standards Authority

OHW overhead wiring

RIM rail infrastructure manager; in relation to rail infrastructure of a railway, means the person who has effective control and management of the rail infrastructure, whether or not the person:

a) owns the rail infrastructure, or

b) has a statutory or contractual right to use the rail infrastructure or to control, or provide, access to it.

Scharfenberg coupler type of multifunction fully automatic railway coupler used on passenger rolling stock

Superseded by TS 03610:1.0, 18/01/2022

Sharon interlocking coupler type of automatic coupler (AAR 10 A) generally used on freight rolling stock and older passenger rolling stock

TfNSW Transport for NSW

5. General requirements

Buffer stops shall be designed for a minimum life of 40 years.

Sections 5.1 to Sections 5.3 specify the general requirements to be considered in the design of buffer stops.

5.1. Safety requirements

Safe design is mandated in the *Work Health Safety Act 2011* and shall be incorporated into the design. Guidance on the safe design of structures can be found in the WorkCover NSW *Safe design of structures code of practice*.

The design of buffer stops, including the refurbishment of existing structures, shall take into account safety considerations for passengers and general public, construction, maintenance and decommissioning workers and train operating personnel.

The AEO shall establish and implement a design management system that manages safety across the full life cycle of an item and shall be developed in accordance with T MU MD 20001 ST *System Safety Standard for New or Altered Assets*.

5.2. Environmental and sustainability requirements

The design of buffer stops shall consider, assess and minimise environmental impacts for the whole of the asset life. Design should also optimise sustainability opportunities over the life cycle of the asset, such as the following:

- durability of material that will last for the expected or planned operational life in line with the asset management cycle
- components (including any chemicals for operations and maintenance use) shall not contain any substance of high toxicity if a substance of lower toxicity is available that could be just as effective
- use of recycled and recyclable material that will meet operational requirements
- visual impact and amenity
- resilience to climate change
- ability and ease to maintain and ‘retro-fit’ improvements over time
- disposal and reuse at lifecycle end

© State of NSW through Transport for NSW

Superseded by TS 03610:1.0, 18/01/2022

5.3. Heritage requirements

The *Heritage Act 1977* is designed to protect, maintain and manage environmental heritage in NSW, including items of archaeological significance. When changes are proposed to items that have heritage significance, one of the following applies:

- for those items listed on the *NSW State Heritage Register*, the provisions of the *Heritage Act* shall be met
- for items listed on a state agency *Section 170 Heritage and Conservation Register*, the heritage management principles and relevant asset management guidelines that are outlined in the *State Agency Heritage Guide* shall be followed

6. Applicable design standards

New buffer stops shall be designed in accordance with the relevant Australian standards, International standards, and the requirements of this standard. Where there is any conflict, the requirements of this standard shall take precedence.

7. Approved configurations

Approved configurations of buffer stops are as follows:

- energy absorbing
- fixed
- lower order protection devices

7.1. Energy absorbing

Energy absorbing buffer stops may be of the following types:

- Friction – These buffer stops can be used in locations where there is sufficient distance for gradual braking of trains as the friction shoes enable buffer stops to slide along the rails. These can be used for main lines, sidings or yards. See Figure 1 for an example.
- Hydraulic –These buffer stops dissipate the energy after a collision through the hydraulic arms that move in the direction of the train's travel and gradually slow down to a stop. These buffer stops can be used on main lines and sidings for low speed trains. See Figure 2 and Figure 3 for examples.
- Combination of friction and hydraulic – These buffer stops can be installed to reduce the overall activation length for the buffer stops at higher train speeds. The initial impact of the train after collision is taken by hydraulic arms. Residual energy is transferred to the buffer frame and then friction shoes which bring the train to a stop. See Figure 4 for an example.

© State of NSW through Transport for NSW

Superseded by TS 03610:1.0, 18/01/2022

Figure 1 – Friction buffer stop

Figure 2 – Hydraulic buffer stop – front view

© State of NSW through Transport for NSW

Superseded by TS 03610:1.0, 18/01/2022

Figure 3 – Hydraulic buffer stop – side view

Figure 4 – Combination of hydraulic and friction buffer stop

© State of NSW through Transport for NSW

Superseded by TS 03610:1.0, 18/01/2022

A buffer stop shall be provided for all new or reconstructed tracks that are either of the following:

- passenger or freight terminal roads
- passenger train stabling or turnback sidings

All energy absorbing buffer stops shall be type approved by the Lead Track Engineer, ASA.

7.2. Fixed

Fixed buffer stops are suitable for low speed terminating locations, for example, stabling roads.

Where passenger conveying trains operate, fixed buffer stops shall only be used when space constraints exist and has been proven to be not economically feasible for reconfiguration of the location to provide for an energy absorbing type. At such locations, a risk assessment as described in Section 12 shall be carried out to ensure the residual risk is acceptable in accordance with T MU MD 20001 ST.

Fixed timber buffer stops shall be in accordance with TfNSW drawing CV0255592 *Standard Buffer Stop for Terminal Roads*.

Fixed buffer stops, except timber, shall only be permitted with written approval from the Lead Track Engineer, ASA.

Fixed buffer stops shall have a cut-out at the bottom for the Scharfenberg coupler guiding horn. The size of the cut-out shall be minimum 400 mm wide (200 mm either side of the track centreline) and 50 mm high. The minimum height above rail of the underside of the buffer beam or plate shall be 750 mm. Train speeds on the approach to fixed buffer stops shall be controlled with additional measures (for example, stop signs, fixed train stops and so forth).

See Figure 5 for an example of a fixed buffer stop.

© State of NSW through Transport for NSW

Superseded by TS 03610:1.0, 18/01/2022

Figure 5 – Fixed buffer stop

7.3. Lower order protection devices

On sidings where trains operate without passengers, lower order protection devices may be used instead of buffer stops, subject to the undertaken risk assessment.

Approved configurations are stop blocks and earth or ballasted run off areas where the risk assessment permits.

Stop blocks shall preferably be 300 mm x 300 mm timber bearers. Concrete sleepers may be used if appropriate timber sleepers are not available. The length of run off area shall be based on the type of rolling stock and potential speed. However, the minimum length shall be five metres.

Table 1 summarises minimum requirements for provision of line terminations for a combination of train and track type and location. This table is not an alternative for individual risk assessment severity for each location to select the most suitable buffer stop.

© State of NSW through Transport for NSW

Superseded by TS 03610:1.0, 18/01/2022

Table 1 - Minimum provisions for line termination requirements

	Mainline and stations	Stabling and turnback sidings	Engineering sidings	Freight sidings	Maintenance centres
Passenger (conveying passengers) train	New or reconstructed track – energy absorbing Existing track – fixed	N/A	N/A	N/A	N/A
Passenger (not conveying passengers) train	New or reconstructed track – energy absorbing Existing track – fixed	New track – energy absorbing Existing track – fixed	N/A	N/A	Lower order
Freight train	New or reconstructed track – energy absorbing Existing track - fixed	N/A	N/A	Lower order	Lower order
Maintenance train	N/A	N/A	Lower order	N/A	N/A

7.4. Replacement criteria

Where an existing buffer stop is to be replaced, the new device shall be of at least equal performance functionality to the original.

8. Approved materials

Approved construction materials for main structural elements are steel and concrete. Timber materials shall not be used as structural elements with the exception of fixed buffer stops. Masonry shall not be used to construct buffer stops.

The material selection shall also comply with the following Australian standards:

- AS 1720 (all parts) *Timber structures*
- AS 3600 Concrete structures
- AS 4100 Steel structures

Requirements that are not stated in Australian standards may be drawn from other international standards.

© State of NSW through Transport for NSW

Superseded by TS 03610:1.0, 18/01/2022

9. Clearances

The horizontal and vertical clearances of buffer stops to adjacent tracks shall be in accordance with ESC 215 *Transit Space*.

10. Type approval requirements

Type approval shall be applied for any designed buffer stop not previously type approved for use. The type approval application shall be prepared in accordance with T MU MD 00005 GU *Type Approval of Products.* As a minimum, the following information shall be submitted as part of the application when requesting type approval of a buffer stop design:

- risk assessment
- design speed and mass
- compatible rail types and sizes
- performance under specific design criterion
- drawings
- design calculation results (including design criterion, buffer stop activation length and various assumptions)
- rolling stock being catered for
- range of couplers and coupler heights allowed for in the design
- test results from impact trials
- assembly and installation procedures
- resetting procedures
- spare parts list and product availability
- maintenance plan including details of failure modes, inspections (routine and post incident) and procedures manual
- protective coating specification

It is recognised that the first seven items in the list immediately above are site specific and will vary for future installations of the type approved buffer stop.

11. Location criteria

Buffer stops shall be provided on all terminal roads and sidings where passenger conveying trains operate.

© State of NSW through Transport for NSW

Superseded by TS 03610:1.0, 18/01/2022

Buffer stops or lower order protection devices shall be provided on engineering and maintenance sidings and all sidings where freight trains operate.

Buffer stops shall not be located on curved track with a radius less than 800 m without the written approval of the Lead Track Engineer, ASA.

Buffer stops shall not be located under overhead wiring sectioning equipment such as insulators, overlaps and air gaps.

11.1. Buffer stops within constrained locations

A terminating road in a station or tunnel shall have a suitable buffer stop. The positioning of buffer stops in such locations shall be the main design factor including verifying the length of the available track and space to accommodate the operation of the buffer stop. When planning buffer stops for such locations written approval is required from the Lead Track Engineer, ASA.

11.2. Temporary buffer stops

Temporary buffer stops shall comply with all the criteria for permanent buffer stops, unless the risk assessment verifies a permissible lesser criterion.

12. Risk assessment

A risk assessment for each location shall be carried out to determine the design performance criteria for the location and to determine whether or not additional overrun protection is required.

The risk assessment shall assess against the risk criteria defined in T MU MD 20002 ST *Risk Criteria for Use by Organisations Providing Engineering Services*.

It shall include factors associated with the train approach to the buffer stop and areas of risk behind the buffer stop. The risk assessment shall be site specific and shall consider the following issues:

- potential speed of rail vehicles approaching the line or siding termination point
- the type and mass of rail vehicles
- track usage level
- train patronage level
- effective gradient at the termination point
- consequences of rolling stock hitting a buffer stop (potential proximity of personnel or the public)

© State of NSW through Transport for NSW

Superseded by TS 03610:1.0, 18/01/2022

- proximity and criticality of adjacent structures (for example bridges, tunnels and overhead wiring (OHW) structures), facilities and properties such as concourse areas and buildings (for example retail or offices)
- location of adjacent roads, pedestrian areas, other tracks, ditches, embankments or water courses

In addition, the risk assessment shall also consider any other relevant site specific criteria.

Additional safety measures may be required for locations where the following circumstances have been identified:

- based on the risk assessment, there is a high probability of derailment
- based on the risk assessment, there is a high probability of serious damage in the event of a train derailment
- close proximity to live tracks carrying passengers, various critical structures, pillar supported structures, work places, areas of crowd concentration
- probability of a freight or passenger train rollback during shunting

Additional safety measures that should be adopted include the following:

- fixed train stops (applicable for passenger trains only)
- construction of end impact walls
- improvement of lighting conditions within the buffer stop approach
- installation of signs displaying distances on the approach to a buffer stop
- limitation of train speeds
- identification and removal of sighting obstructions

Refer to Section 15 for details of overrun protection that can be provided to mitigate the damage after a collision has occurred with a buffer stop.

Factors such as deceleration rate of the colliding train, close proximity of the buffer stop location to adjacent live tracks and other infrastructure may add to the extent of potential damage caused by a runoff train after colliding with a buffer stop. At such locations additional measures in the form of overrun protection shall be adopted. See Section 15.

In addition to the above, locomotive hauled passenger and freight trains operating on the TfNSW network must be considered.

The requirements of TfNSW, *Control of Trains Approaching Catch Points, Buffer Stops and Short Overlaps* may be considered in the risk assessment.

© State of NSW through Transport for NSW

Superseded by TS 03610:1.0, 18/01/2022

13. Design criteria – passenger train buffer stops

The design criteria provided in Section 13.1 to Section 13.7 shall be applied for the design of new buffer stops for passenger line terminal roads and passenger train stabling yards.

13.1. Train mass

The design of buffer stops shall consider both the minimum (tare) mass and the maximum (loaded) mass of trains.

For each location the risk assessment process shall determine the appropriate minimum and maximum masses based on the type of rolling stock, train set combinations and whether empty or loaded trains are proposed to operate at the site.

Table 2 shows nominal train masses estimated on the range of rolling stock across the network.

Table 2 - Train loadings and masses

Vehicle type	Tare mass (t)	Loaded mass (t)	Additional detail
Suburban	412	562	Based on A set (8 car)
Intercity	517	710	Based on D set (10 car)
Diesel (NSW)	401	429	Based on XPL set (7 car)
Diesel (interstate)	480	527	Based on XPT set (8 car + 2 power car)
Locomotive hauled passenger		1525	Indian Pacific (2 x 132 tonne locomotive, 24 x 50 passenger cars, 2 x 10 tonnes car trailers)

13.2. Train speed

The design speed shall be the probable worst case speed.

The probable worst case speed shall consider the causal mechanisms of driver error, rolling stock problems (for example, brake failure), or loss of wheel or rail adhesion. It is not expected to address deliberate malintent of the driver, driver incapacitation or a runaway train. The exception is that for yards and sidings a runaway of a stabled train shall be included in the determination of probable worst case speed. Where probable worst case speed is greater than 25 km/h and damage is anticipated due to the impact with the buffer stop, additional overrun or retardation measures shall be considered.

When determining the probable worst case speed the factors shall include the following:

- the route approaching the buffer stop
- the advertised speed
- the track gradient

© State of NSW through Transport for NSW

Superseded by TS 03610:1.0, 18/01/2022

- the speed of the train following the negotiation of any crossovers
- any adhesion issues between wheel and rail
- trip gear fitted to rolling stock
- the likely speed achieved after stopping at a signal

The minimum determined design speed shall be 10 km/h.

Any collision between a train and buffer stop shall be considered a rail incident.

To minimise the potential occurrence of these incidents, the minimum distance at which a train is to stop shall be 5 m in the buffer stop approach unless a fixed train stop has been installed, in which case the minimum distance is 2.5 m. Any other variations to the minimum distance shall have a written approval from Lead Track Engineer, ASA.

13.3. Track requirements

A length of straight track, at least equal to the length of the longest vehicle permitted to operate on that track, shall be provided wherever reasonably practicable for the approach to a buffer stop. This provision will control any vehicle colliding with a buffer stop to do so with its longitudinal axis perpendicular to the buffer beam.

The extent of the buffer stop track shall be from 20 m in front of the buffer stop to the end of the design length of track required for the buffer to stop a train at the design speed.

The rail and track configuration shall be in accordance with relevant ASA standards.

The minimum requirements for sleepers upon which the buffer stop is to be installed shall be as follows:

- all sleepers in the buffer stop track area assessed as good in accordance with TMC 203 *Track Inspection*
- resilient fastening assemblies are installed
- plates shall be secured with screw spikes
- full ballast profile for ballasted track
- sleepers embedded in concrete shall have a strong bond with the concrete

Friction only and combination of friction and hydraulic buffer stops shall be compatible with the rail section type to achieve optimum fixity or adhesion to enable an efficient instalment.

The rail surface shall be continuous, without any joints or welds that may cause the rails to deform at locations where attachments related to friction buffer stops are required to travel along the track. Any shortening of a track's usable length due to the planning of a buffer stop and the required distances must be coordinated.

© State of NSW through Transport for NSW

Superseded by TS 03610:1.0, 18/01/2022

13.3.1. Buffer stop activation length (for friction only or friction and hydraulic buffer stops)

Buffer stop activation length (L_A as shown in Figure 6) is essential to accommodate the backward movement of the buffer stop. This distance depends on the buffer stop's braking forces and is the distance required to ensure the gradual deceleration of a train which has collided with a friction or friction hydraulic buffer stop. An appropriate length of track shall be provided behind the sliding buffer stop to accommodate its movement and associated friction shoes. The concept of the buffer stop activation length in relation to the buffer stop total length (L_T) and frame length (L_F) is given in Figure 6.

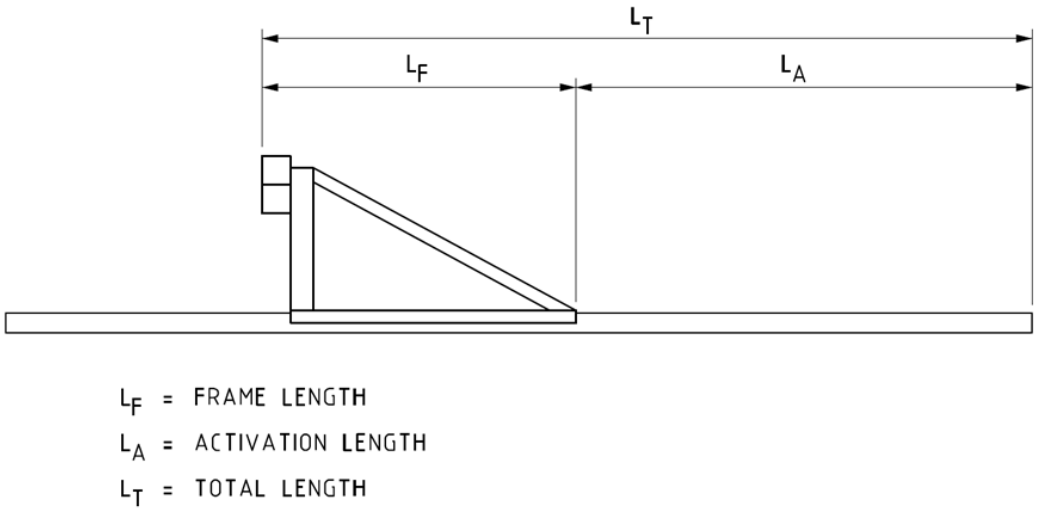

Figure 6 – Buffer stop total length, activation length and frame length

The designer shall recommend, or seek from the manufacturer, a minimum effective activation length (L_A) required for the buffer stop.

It is necessary to ensure the track infrastructure throughout the range of the activation length is straight and free from any obstacle that may interfere with the correct function of the buffer stop.

Rail within the buffer stop total length (L_T) shall be clear of any obstructions. Aluminothermic welds, rail joints or insulated joints are not permitted within in the activation length. If flash butt welds have been installed, it is essential for them to be ground flush with the rail profile. No embossing on the rail is allowed in the activation length.

13.4. Retardation and deceleration rates

For the range of train masses specified in Section 13.1, trains shall be brought to a stop from the maximum speed at a deceleration rate of 1.5 m/s².

Where site constraints make it difficult to have a reasonable alternative to cater for the lightest as well as the heaviest train, the absolute maximum deceleration rate shall be no greater than 2.5 m/s², subject to compliance with Section 13.5.

© State of NSW through Transport for NSW

Superseded by TS 03610:1.0, 18/01/2022

13.5. Maximum force to minimise train damage

To prevent damage to the rolling stock the buffer stop shall exert a maximum force of 1000 kN on the rolling stock.

Recent rolling stock procurement specifications include the requirement for progressive energy absorbing components at the impacting end of the set. However, older rolling stock do not have this allowance for progressive energy dissipation and may begin to suffer structural damage at forces in excess of 1000 kN.

13.6. Coupler compatibility

Buffer stops shall be designed to suit the range of couplers on the rolling stock operating in the area.

Buffer stops shall generally be designed for the Multifunction (Scharfenberg, type 10) coupler but shall be capable of stopping a train with an Automatic (AAR 10A) interlocking coupler without causing structural damage to either the coupler or the buffer stop. Buffer stops are not required to have a Scharfenberg coupler guiding horn fitted. Refer to Section 3 for details of relevant drawings of these couplers.

It is acknowledged that for some passenger rolling stock types, the contact points (accounting for the full allowable coupler swing of 17 degrees) will be on the buffer face rubber block, however only partial contact will be achieved.

The underside of the buffer beam or plate shall be high enough above rail to allow for the Scharfenberg guiding horn on the train coupler to protrude beneath the buffer beam or plate when engaging the coupler. The minimum height above rail of the underside of the buffer beam or plate shall be 750 mm.

The buffer stop shall be designed to allow for the coupler to compress 400 mm before the anti-climber plates on the rolling stock are engaged on the buffer stop.

Refer to Figure 7 for coupler interface cut-out dimensions.

© State of NSW through Transport for NSW

Superseded by TS 03610:1.0, 18/01/2022

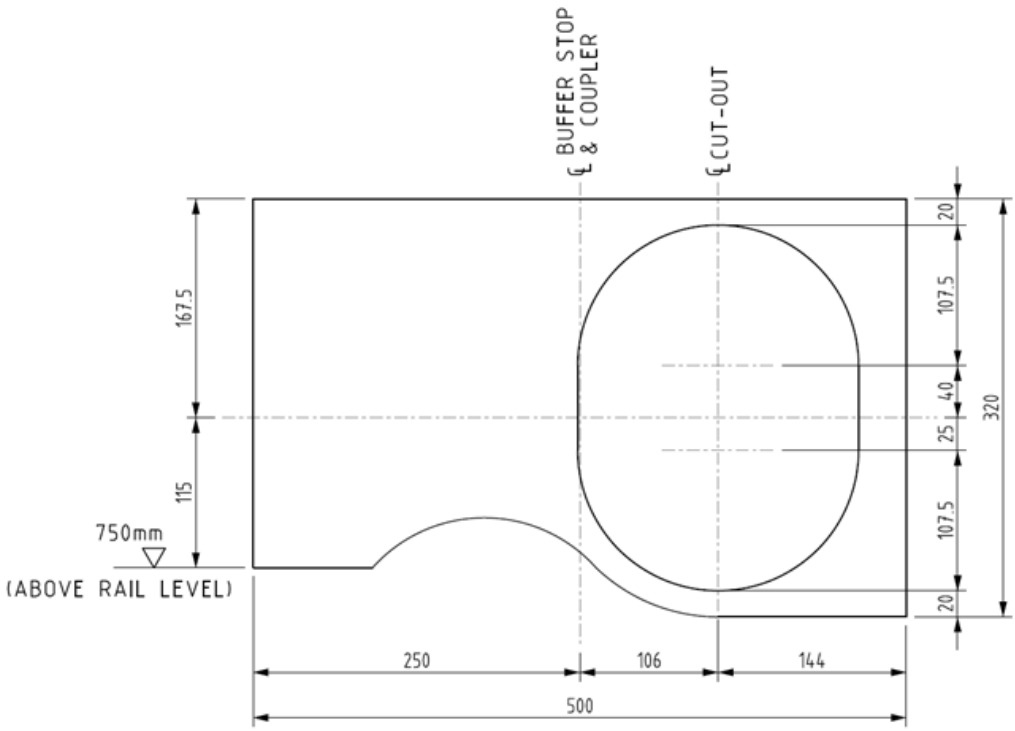

Figure 7 – Coupler interface cut-out dimensions

13.6.1. Buffer face rubber block

The couplers on trains will not always be centrally located in their design positions. Some couplers such as the Sharon interlocking coupler are not self-centering.

The buffer beam or plate shall have a rubber block attached to mitigate the impact and to re-centre misaligned couplers on impact. The rubber block shall be able to withstand the impact of the various types of couplers without causing damage to the rubber block, the coupler or equipment on the front of the train in the vicinity of the coupler such as electrical heads and the horizontal protrusion on one side of the coupler on some rolling stock.

The rubber block shall be mounted in such a way that any impact from the coupler cannot damage the fastening of the rubber block to the backing plate.

The nominal size of the buffer face rubber block shall be of 500 mm by 320 mm dimension with at least 20 mm offset from the cut out to avoid or minimise cracking (see Figure 1). It cannot be any wider as the flat face will hit the electrical heads and the height cannot be adjusted to accommodate the Scharfenberg guiding horn at the bottom. The rubber block shall have a Shore durometer value of 75 ± 5 and shall be ultraviolet (UV) stable.

The configuration of the rubber block shall have written approval provided by the Lead Rolling Stock Engineer, ASA, for scenarios where partially open cut outs, such as where the lower edge of the rubber plate is kept at 750 mm above rail level and where the rubber block is not flat faced.

© State of NSW through Transport for NSW

Superseded by TS 03610:1.0, 18/01/2022

13.6.2. Buffer face cut-out

The coupler interface on the rubber block shall include a cut-out for engagement of the coupler. The cut-out shall be a minimum 215 mm in diameter. The centre of the cut-out shall be offset 106 mm from the centreline of the buffer stop. The depth of the cut-out shall be sufficient so that the cone protrusion of the coupler does not impact the buffer stop.

13.6.3. Drawings

Relevant drawings for TfNSW rolling stock are listed in Section 3.

13.7. Override protection

Buffer stops may include anti-climber plates to mitigate the possibility of overriding.

In certain cases the anti-climber plates may be omitted if calculations determine that the impact speed will not result in sufficient compression of the coupler to engage the anti-climber within the design length of overrun track.

Where anti-climber plates are used they shall be compatible with the anti-climber plates fitted to the most recently procured rolling stock. For further details on anti-climbers, refer to Appendix B of T MU RS 01000 ST *Structural Integrity and Crashworthiness of Passenger Rolling Stock*.

The centreline of the anti-climber plates shall nominally be 1030 mm horizontally from the centreline of the rolling stock and 1100 mm vertically above rail level.

14. Design criteria – non-passenger train buffer stops

The design criteria provided in Section 14.1 to Section 14.5 shall be applied in the design of new buffer stops for freight line terminal roads and non-passenger train stabling yards.

14.1. Train mass

Minimum and maximum mass shall be specified based on the range of trains and rolling stock, including maintenance vehicles, which use the siding.

14.2. Train speed

Buffer stops shall be designed for a speed of 10 km/h unless the risk assessment as prescribed in Section 12 determines a higher design speed is required.

© State of NSW through Transport for NSW

Superseded by TS 03610:1.0, 18/01/2022

14.3. Track requirements

Track requirements for non-passenger train buffer stops are similar to those stated for passenger train buffer stops as detailed in section 13.3.

Overrun track shall be provided for non-passenger vehicles. The length of overrun track shall be based on factors outlined in Section 15.

14.4. Retardation and deceleration rates

Trains shall be brought to a stop from maximum speed at a deceleration rate of 2.5 m/s^2.

14.5. Coupling capability

The buffer stop interface must be designed to suit the range of rolling stock that operates upon the track, nominally 780 mm to 915 mm above rail for freight wagons and nominally 840 mm to 900 mm for locomotives. Refer to T HR RS 00100 ST *RSU 100 Series – Minimum Operating Standards for Rolling Stock – General Interface Standards* for further details. A curved or V face rubber block shall be designed for freight rolling stock with auto-couplers.

15. Additional overrun protection

When the risk assessment determines that additional overrun protection (area and length) is required, it shall be provided for the mitigation of consequences of a train hitting the buffer stop at speeds in excess of the probable worst case speed.

Options for the design of suitable overrun protection include the following:

- provision of space free from structures, other tracks and people
- a speed-arresting device such as a ballast or sand trap beyond the buffer stop
- end impact walls
- speed control devices to significantly reduce the speed of an approaching train
- extra length of track

Where the risk assessment determines that an overrun protection is required, but cannot be provided, a safety assessment shall be prepared and a concession shall be obtained from the Lead Track Engineer, ASA. In this situation the buffer stop shall be designed to provide the best risk mitigation reasonably possible within the local constraints.

© State of NSW through Transport for NSW

Superseded by TS 03610:1.0, 18/01/2022

15.1. General guidance on the design of end impact walls

Wherever an end impact wall is to be built, the buffer stop and the wall should be considered together as a single system as the wall takes residual impact from the buffer stop.

The purpose of the end impact wall is to prevent an overrunning train from intruding into the zone being protected. In this case permanent damage to the train will most likely occur.

The end impact wall should be a minimum height of 1.3 m above the top of the rail.

The design of the end impact wall shall ensure there are no features or protrusions that may potentially cause discrete or particular localised damage to a train colliding with it, for example, anything penetrating the cab of the train or collapsing onto the cab.

Additionally, where the end impact wall is providing train protection to a structure that if impacted could collapse onto the track or cause other significant potential for injury, the design should promote deflection of the train laterally away from the structure.

For track serving passenger traffic, the end impact wall shall be designed for a horizontal force of 5000 kN at a height of 1 m above the top of the rail level where a buffer stop with a minimum braking capacity of 2500 kNm is provided.

In shunting and marshalling yards, the end impact walls shall be dimensioned for a horizontal design force of 10,000 kN at a height of 1 m above the top of the rail.

16. Protective coatings

Steel and timber buffer stops shall have a protective coating applied in accordance with the relevant standards in Section 16.1 to Section 16.3.

16.1. Steel buffer stops

Steel buffer stops shall have a protective coating applied in accordance with SPC 301 *Structures Construction*. They shall be either painted or galvanised.

16.1.1. Painted buffer stops

All new buffer stops shall be painted white except for the front section.

The front section of the horizontal front beam or buffer beam between the running rails shall be painted black. Only the front face of the beam is required to be black.

White paint colour shall be in accordance with AS 2700 *Colour standards for general purposes* N14 white.

Black paint colour shall be in accordance AS 2700 N61 black.

Paint plaques are not required.

© State of NSW through Transport for NSW

Superseded by TS 03610:1.0, 18/01/2022

16.1.2. Galvanised buffer stops

Galvanizing shall be carried out in accordance with the requirements outlined in SPC 301 S25 Protective Galvanised Coating of Steelwork – System G.

16.2. Timber buffer stops

Timber components in buffer stops shall be of treated hardwood, with an approved primer, an all-purpose undercoat and a white water base paint for finishing coat.

The colour shall be white as specified in Section 16.1.1.

Any steel components in timber buffer stops shall be in accordance with SPC 301 Specification S22 – Miscellaneous Steelwork and painted black as specified in Section 16.1.1.

16.3. Stop blocks

Timber stop blocks shall be painted in accordance with Section 16.1.1.

17. Drawing standards

Construction drawings shall comply with T MU MD 00006 ST *Engineering Drawings and CAD Requirements*. The construction drawings shall detail the design train mass, design train speed and deceleration rates and shall include any other information that is relevant to ensure that the new structure is constructed and maintained in accordance with the design.

18. Light signal

Light signals shall be installed at buffer stop locations in accordance with SPG 0706 *Installation of Trackside Equipment*, ESG 100.1 *Signal Design Principles - Signals* and SPG 1571 *Light Signals*.

Light signals are not required on lower order protection devices.

19. Electrical isolation

Where buffer stops are installed in the electrified network, the electrical hazards shall be controlled. For buffer stops manufactured with conductive components, the identified electrical hazards include but not limited to, the following:

- touch potentials – rail to nearby metallic earthed structures
- track circuit operation – buffer stop provides a low impedance between rails preventing track circuit operation
- electrolysis – earthing of rails through the buffer stop uprights

© State of NSW through Transport for NSW

Superseded by TS 03610:1.0, 18/01/2022

No electrical hazard exists if the installation method for the buffer stop does not contact the running rails in the electrified network.

If the installation method permits a buffer stop within the electrified network to contact the running rails, the buffer stop shall be at least 2 m from any adjacent metallic earthed structures. Where the buffer stop has the potential to slide along and remain connected to the track, the 2 m clearance from adjacent metallic earthed structures is to be maintained for any possible position of the buffer stop.

If the installation method permits a buffer stop within the electrified network to contact the running rails, and is on a track circuited line, the buffer stop shall be installed in such a manner so as to allow the operation of the track circuit and to also make provision for traction return. Examples of methods to comply with this requirement are provided in ESG 100.1.

If the installation of the buffer stop simultaneously permits the buffer stop to contact rail and soil (excluding ballast), additional treatment shall be applied to maintain the track insulation to earth.

20. OHW requirements

Buffer stops shall comply with electrical requirements as set out in Section 20.1 and Section 20.2.

20.1. Clearances

Buffer stops installed under OHW shall have signs attached warning of 1500 V dc OHW.

The minimum contact wire height over the buffer stop shall be such that the clearance requirements specified in T HR EL 08001 ST *Safety Screens and Barriers for 1500 V OHW Equipment* are satisfied.

20.2. Overhead wiring termination insulator

The OHW termination insulators are normally cut in approximately 2 m on the approach side of fixed buffer stops.

For friction buffer stops, consideration shall be given to how far the buffer stop is designed to move and ensure that the termination insulators will not be hit by the pantograph.

If the wire above the buffer stop is live, the clearance of the contact wire above the buffer stop shall be such that the clearance requirements specified in T HR EL 08001 ST are satisfied.

21. Construction

The design shall take into account construction constraints, particularly any construction activities identified under live traffic as well as any restrictions associated with construction during track possession.

© State of NSW through Transport for NSW

Superseded by TS 03610:1.0, 18/01/2022

The design documentation shall identify standards for construction, including construction methods, processes and materials.

Any construction works for buffer stop installation shall be carried out in accordance with SPC 301.

The design documentation shall reflect this requirement and shall include any project specific requirements necessary for completeness of the technical specifications.

22. Maintenance

The design of buffer stops shall consider access for inspection and maintenance of components.

The design engineer shall carefully select components, materials and finishes that will minimise maintenance during the life of the structure.

Spare components, especially consumables, shall be readily available.

The technical maintenance plan (TMP) for a buffer stop shall be developed in accordance with T MU AM 01003 ST *Development of Technical Maintenance Plans* and ESC 302 *Structures Defect Limits*. The requirements shall include examination tasks and frequencies, any resetting requirements, damage limits and repair standards as well as any maintenance requirements specified by the manufacturer. Any site specific maintenance requirements may also need to be captured.

23. Decommissioning or disposal

The decommissioning or disposal of an asset is the final stage of the asset life cycle. Proper planning of this part of the life cycle is an integral part of the strategic life cycle process.

Decommissioning is the process of withdrawing an asset from operational service on the network whilst disposal is the process of physically removing a decommissioned asset, for example, demolition of a buffer stop followed by removal and recycling.

The process to be undertaken for the disposal of a buffer stop shall be as follows:

i. a report shall be produced to confirm that the asset is surplus to the requirements of the rail network or it is life expired

ii. the report shall identify the benefits including financial and any costs arising from the proposed decommissioning or disposal

iii. the report shall confirm stakeholder engagement regarding the proposed action with such engagement including, but not be limited to, rail infrastructure manager (RIM), heritage and environmental body consultation

© State of NSW through Transport for NSW

Superseded by TS 03610:1.0, 18/01/2022

iv. the means of decommissioning or disposal shall be a risk based decision carried out in accordance with T MU MD 20002 ST

v. the report shall include a decommissioning or disposal plan for implementation

The asset database shall be updated to reflect network changes following decommissioning or disposal.

© State of NSW through Transport for NSW