For queries regarding this document
standards@asa.transport.nsw.gov.au
www.asa.transport.nsw.gov.au

Technical Note

TN 021: 2014

Issued date 17 March 2014
Effective dates 17 March 2014 to 17 March 2015

Subject: Withdrawal of ESM 109 Communications Earthing and Surge Suppression

This technical note is issued by the Asset Standards Authority to advise that RailCorp Standard ESM 109 *Communications Earthing and Surge Suppression*, Version 1.0 is now superseded by ASA Standard T HR TE 21002 ST version 1.0.

The changes to previous content in ESM 109 include the following:

- replacement of RailCorp organisation roles and processes with those applicable to the current ASA organisational context
- minor amendments and clarification to content
- conversion of the standard to ASA format and style

Authorisation

	Technical content prepared by	Checked and approved by	Interdisciplinary coordination checked by	Authorised for release
Signature				
Name	Ian Bonner	Trevor Payne	David Spiteri	Graham Bradshaw
Position	Principal Engineer Rail Application	Lead Telecommunications Engineer	Chief Engineer Rail	Principal Manager Network Standards & Services

© State of NSW through Transport for NSW

Superseded by T HR TE 21002 ST

RailCorp

Engineering Standard

ESM 109

COMMUNICATIONS EARTHING AND SURGE SUPPRESSION STANDARD

Version 1.0

Issued August 2010

Owner:	Chief Engineer, Telecommunications		
Reviewed by:	P. Kerrigan Telecommunications Network Manager C&CS Division	Approved & Authorised by:	J. Byron Chief Engineer, Telecommunications

Disclaimer

This document was prepared for use on the RailCorp Network only.

RailCorp makes no warranties, express or implied, that compliance with the contents of this document shall be sufficient to ensure safe systems or work or operation. It is the document user's sole responsibility to ensure that the copy of the document it is viewing is the current version of the document as in use by RailCorp.

RailCorp accepts no liability whatsoever in relation to the use of this document by any party, and RailCorp excludes any liability which arises in any manner by the use of this document.

Copyright

The information in this document is protected by Copyright and no part of this document may be reproduced, altered, stored or transmitted by any person without the prior consent of RailCorp.

Superseded by T HR TE 21002 ST

Document control

Revision	Date	Author	Reviewers	Summary of change
1.0	23/8/10	J. Byron	P. Kerrigan (Comm's) P. Szacsvay (Signals) M. Giacoppo (Electrical) Communications specialist engineers as recorded in Standard Development File	Original Version

Summary of changes from previous version

Summary of change	Section

Superseded by T HR TE 21002 ST

Contents

1 Scope and Application 6
2 Version History 6
3 References 6
3.1 Australian and International Standards 6
3.2 RailCorp Documents 6
3.3 Drawings: 7
4 Definitions 7
4.1.1 Communications Earth Bar 7
4.1.2 Communications Earth Terminal 7
4.1.3 Dedicated Earth Wire Configuration 7
4.1.4 Design Approval Authority 7
4.1.5 Differential Earth Clamp 7
4.1.6 EPR Hazard Zone 7
4.1.7 Hazardous EPR 8
4.1.8 LV Earth System 8
4.1.9 Power Earth Wire Configuration 8
4.1.10 Telecommunications Equipment 8
4.1.11 Telecommunications Equipment Room 8
5 Abbreviations 8
6 Mandated Requirements 9
7 EPR Hazard Zones 9
8 Earthing System to be Used 9
8.1 Communications Earthing System (CES) 9
8.1.1 CES Default System To Be Used 9
8.1.2 Communications Earth Terminal (CET) 9
8.1.3 Communications Earth Bar (CEB) 9
8.2 Telecommunications Reference Conductor (TRC) System 10
8.2.1 Where TRC System To Be Used 10
8.2.2 Telecommunications Reference Conductor 10
9 Communications Earth Bar (CEB) 10
9.1 Purpose of CEB 10
9.2 Configuration of CEB 10
9.3 Combination CEB and CET 10
9.4 CEB Connection to CET and Earth Mat / Stakes 11
9.4.1 Sites Subject to Significant Risk of Lightning Strike 11
9.4.2 Sites Not Subject to Significant Risk of Lightning Strike 11
9.5 Internal Earth Bus 11
9.5.1 Purpose of Internal Earth Bus and Where Required 11
9.5.2 Installation of Internal Earth Bus 11
10 Mains Supply and Earthing Arrangements 12
10.1 Mains Supply 12

Superseded by T HR TE 21002 ST

10.2 Mains Powered Sites External to the Electrified Rail Corridor 12
10.2.1 General 12
10.2.2 Sites with No Communications Earth Mat or Protective Earth Stakes 12
10.2.3 Sites with Communications Earth Mat or Protective Earth Stakes 13
10.3 Mains Powered Sites Within Electrified Rail Corridor 15
10.3.1 D.C. Isolation 15
10.3.2 Mains Installation and Connections 15
10.3.3 Isolating Transformers 17
10.4 Mains Surge Protection 17
10.5 Sites Without Mains Power 17
10.5.1 Sites with locally generated 240V a.c. & associated DB 17
10.5.2 Sites without 240V a.c. DB 18
11 Earthing of Racks, Cabinets, Runways etc 19
11.1 General 19
11.2 Fixing of Earth Wires 19
11.3 Sites without Internal Earth Bus 19
11.3.1 D.C. Supply - Dedicated Earth Wire (DEW) Equipment 19
11.3.2 D.C. Supply - Power Earth Wire (PEW) Equipment 20
11.3.3 Equipment Suitable For DEW or PEW Configuration 22
11.3.4 Double Insulated LV AC Equipment (Including Dual Mode AC/DC) 22
11.3.5 Earthed LV AC Powered Equipment (Including Dual Mode AC/DC) 22
11.4 Sites with Internal Earth Bus 23
11.5 Rectifier / Power Supply Racks 24
11.6 Racks Containing No Powered Equipment (including MDF's) 24
11.7 Isolation of Racks and Rack Clusters 26
11.8 Internal Rack Earth Wiring 26
11.9 Cable Runways 26
12 Lightning and Surge Dissipation 26
12.1 Surge Dissipation 26
12.2 Lightning Protection (Sites with Masts or Towers) 26
12.2.1 General Principals 26
12.2.2 Downconductors 27
12.2.3 Finials 27
12.2.4 Antenna Feeder Cables – Above Ground Building Entry 27
12.2.5 Antenna Feeder Cables – Below Ground Building Entry 28
12.2.6 Antenna Feeder Cables – Tower or Mast Bonding 28
12.2.7 Typical Arrangements 28
13 Earth Mat and Earth Stakes 29
13.1 Purpose 29
13.2 Earth Mat 29
13.3 Earth Electrode 30
13.4 Earth Cable Bonding 31
13.5 Earth Resistance 31
14 Communications Cables 31
14.1 Direct earth bonding of cable sheath etc. 31

Superseded by T HR TE 21002 ST

14.2 Indirect earth bonding of cable sheath etc. 32
14.3 Non-RailCorp Communications Cables 32
15 Signals Earth....32
16 Earth Isolation 32

Superseded by T HR TE 21002 ST

1 Scope and Application

This Standard establishes requirements for earthing and lightning protection in communications apparatus rooms.

It is applicable to all new RailCorp Communications Apparatus Rooms and outdoor equipment locations with powered equipment, and to existing locations where the earthing system is being upgraded.

RailCorp may agree in specific cases to provide mains supply to non-RailCorp telecommunications entities. The requirements of Clause 10 of this Standard apply equally to such installations and other clauses (e.g. Clause 14.3) place restrictions on them. The design of these installations shall take into account that RailCorp earthing on the site is in accordance with this Standard.

2 Version History

This is the initial version of this Standard.

3 References

3.1 Australian and International Standards

AS 2067:2008 “Substations and high voltage installations exceeding 1 kV a.c.”

AS/NZS 1768:2007 “Lightning protection”

AS/NZS 3000:2007 “Electrical installations” (known as the Australian/New Zealand Wiring Rules)

AS/NZS 3108:1994 (superseded - for this purpose by AS/NZS 61558.1.2008) “Approval and test specification - Particular requirements for isolating transformers and safety isolating transformers”

AS/NZS 3835.1:2006: “Earth potential rise—Protection of telecommunications network users, personnel and plant. Part 1: Code of practice”

AS/NZS 3835.2:2006: “Earth potential rise—Protection of telecommunications network users, personnel and plant. Part 2: Application guide”

AS/NZS 61558.1:2008 “Safety of Power Transformers, Power Supplies, Reactors and Similar Products - General requirements and test” (IEC 61558-1 Ed 2, MOD)

AS/ACIF S009:2006 “Installation requirements for customer cabling (Wiring Rules)”

HB 29-2007 “Communications cabling manual - Module 2: Communications cabling handbook”

3.2 RailCorp Documents

EP 1210020SP “Low Voltage Distribution Earthing”

EP 1210021SP “Low Voltage Installations Earthing”

EP 1700011SP “Low Voltage Isolating Transformer”

Superseded by T HR TE 21002 ST

EP 90100003 SP "Co-ordination of Communications and Power Systems - Earth Potential Rise"

ESM 106 "Telecommunications for Substations and Section Huts"

ESM 107 "Telecommunications Equipment Rooms"

SPC 511 "Boundary Fences"

TMM C001 "Telecommunications Design Process - Delegations and Descriptions"

3.3 Drawings:

EL 0170330: "Low Voltage Double Insulated Point of Attachment – General Arrangement"

4 Definitions

4.1.1 Communications Earth Bar

A single point of connection to which Telecommunications Equipment is earthed. It is bonded to the Communications Earth Terminal.

4.1.2 Communications Earth Terminal

An enclosed terminal (as per AS 3000 Clause 5.6.2.7) provided for the purpose of connecting the earthing system for Telecommunications Equipment to the electrical earthing system.

4.1.3 Dedicated Earth Wire Configuration

A d.c. power configuration in which the power cables are not used for earthing of equipment, but rather a dedicated earth wire is used for this purpose as described in Clause 11.3.1.

4.1.4 Design Approval Authority

Within this Standard, Design Approval Authority is the Chief Engineer, Telecommunications or the person(s) nominated by that officer in TMM C001 with the delegation for design approvals for Communications Facilities, unless the relevant Telecommunications Equipment Room is a special purpose room for a single telecommunications discipline, in which case the Design Approval Authority is the person nominated in TMM C001 with the delegation for design approvals for that telecommunications discipline.

4.1.5 Differential Earth Clamp

A device that electrically connects two earthing systems under overvoltage conditions, but remains electrically disconnected under normal operating conditions. This is equivalent to Signals terminology "Transient Earth Clamp".

4.1.6 EPR Hazard Zone

A zone where the EPR may exceed 430 V AC under power system fault conditions.

Superseded by T HR TE 21002 ST

4.1.7 Hazardous EPR

An earth potential rise exceeding 430 V AC under power system fault conditions.

4.1.8 LV Earth System

The protective earthing system associated with the electrical power system at the site.

4.1.9 Power Earth Wire Configuration

A d.c. power configuration in which the power cables are used for earthing of equipment as described in Clause 11.3.2.

4.1.10 Telecommunications Equipment

Equipment, including power supplies, cables, radios, switches and other nodes, installed for the purpose of providing communications (including audio, video and data) in a fixed or mobile environment.

4.1.11 Telecommunications Equipment Room

A room or building with the primary purpose of housing RailCorp Telecommunications Equipment.

5 Abbreviations

a.c	Alternating Current
CEB	Communications Earth Bar
CES	Communications Earth System
CET	Communications Earth Terminal
CSA	Cross-sectional Area
DB	240 V / 415 V Distribution Board
d.c.	Direct Current
DEW	Dedicated Earth Wire
DSMSB	Distribution Supply Main Switch Board
EPR	Earth Potential Rise
GEM	Ground Enhancing Material
Gn/Y	Green / Yellow cable insulation
GPO	General purpose 10A rated socket outlet (General Purpose Outlet)
MEN	Multiple Earthed Neutral
MSB	Main Switch Board
PEW	Power Earth Wire
RCD	Residual Current Detector

Superseded by T HR TE 21002 ST

TFEE	Telecommunications Functional Earth Electrode
TRC	Telecommunications Reference Conductor

6 Mandated Requirements

Requirements of this Standard must be adhered to unless noted as non-mandatory or unless dispensation approval is given by the Chief Engineer, Telecommunications.

7 EPR Hazard Zones

The provision of Telecommunications facilities to High Voltage Sites (substations, section huts, etc) is addressed in ESM 106. All telecommunications equipment, including telephones, must be installed within the bounds of the earth mat such that no significant EPR difference exists between the end user location and the switch location, unless in accordance with a design jointly certified for safe operation in accordance with AS/ACIF S0009:2006 Clause 6.1.3 by the RailCorp Chief Engineer, Electrical or his appropriately qualified delegate and the RailCorp Chief Engineer, Telecommunications.

Although Telecommunications Equipment Rooms other than those covered by ESM 106 as above should not be installed within EPR Hazard Zones, it is possible that some existing sites are within such zones or that high voltage installations may be built close to an existing Telecommunications Equipment Room, introducing an EPR Hazard Zone at the site. In such cases, the requirements of this Standard may not be sufficient to ensure a safe installation and a specific design shall be developed based upon AS/NZS 3835:2006. Such a design shall require joint approval by the Chief Engineer, Electrical and the Chief Engineer, Telecommunications.

8 Earthing System to be Used

8.1 Communications Earthing System (CES)

8.1.1 CES Default System To Be Used

The earthing system for communications rooms shall be of the CES configuration (as defined in AS/ACIF S009) including a CEB and CET as detailed in this Clause 8.1, unless specific site reasons dictate the use of a separate telecommunications reference earth. If a separate telecommunications reference earth is required, the site shall use a TRC system in accordance with Clause 8.2.

8.1.2 Communications Earth Terminal (CET)

The CET shall be installed in accordance with AS/ACIF S009:2006 Figures 1 and 2.

8.1.3 Communications Earth Bar (CEB)

A CEB shall be provided in accordance with Clause 9.

All Communications equipment racks, metallic cable run-ways, internal earth bus (where used – see Clause 9.5) etc shall be bonded to the CEB with Green/Yellow insulated cables in accordance with AS/ACIF S009 and Clause 11. (An exception is that a.c. powered equipment racks shall be earthed directly to the MSB or DB earth bar instead of via the CEB.)

Superseded by T HR TE 21002 ST

8.2 Telecommunications Reference Conductor (TRC) System

8.2.1 Where TRC System To Be Used

Earth noise or d.c. current issues may, in some cases, necessitate the use of a TRC system (as defined in AS/ACIF S009) without direct bonding to the protective earth. In these cases, the requirements of Clause 8.2 shall replace those of Clauses 8.1.1 and 8.1.2.

8.2.2 Telecommunications Reference Conductor

The TRC shall be installed in accordance with AS/ACIF S009:2006 Figure 4 Method 1 or Method 2 and shall be connected to the LV earthing system via a voltage-limiting device (Differential Earth Clamp).

The Differential Earth Clamp shall be rated at 330 volts and warning signs stating: “WARNING! This earth is not directly bonded to the electrical earthing system. A hazardous voltage may exist between this earth and other earthed objects.” shall be placed on all TRC link bars and terminations in accordance with AS/ACIF S009.

Test terminals shall be provided in parallel with the differential earth clamp.

2 meters touch potential separation shall be maintained between exposed conductive equipment items connected to different earthing systems.

The TFEE shall be located with at least 4 metres clearance from any earth mat (see Clause 13) directly bonded to the LV electrical earth.

9 Communications Earth Bar (CEB)

9.1 Purpose of CEB

The CEB provides a single point of connection to which Telecommunications Equipment is earthed. It is bonded to the Communications Earth Terminal.

9.2 Configuration of CEB

The CEB shall be a suitable bar for earthing the relevant equipment in that Apparatus Room. In a simple case it may be the MDF Earth Bar. In radio sites with a feeder gland plate, the CEB shall be installed as close to the gland plate as possible and for preference should be integral with the gland plate. If the gland plate is separate to the CEB, they shall be interconnected with copper bar or braid no smaller than 20 mm x 3 mm.

An internal earth bus (see Clause 9.5) may be used to form a large (distributed) CEB.

9.3 Combination CEB and CET

The CET & CEB may be combined into one physical bar provided the “enclosed terminal” requirements of AS 3000 Clause 5.6.2.7 are complied with.

Superseded by T HR TE 21002 ST

9.4 CEB Connection to CET and Earth Mat / Stakes

9.4.1 Sites Subject to Significant Risk of Lightning Strike

Refer to Clause 13 for a description of the earth mat and earth sakes.

Where an antenna feeder gland plate exists, the bonding of the earth stakes and earth mat to the CEB / internal earth bus shall be via the gland plate. (See Clauses 9.2 and 12.2.4.)

Otherwise, the cables used to interconnect the internal earth bus / CEB to the earth stakes / mat, shall be green / yellow of minimum cross-sectional area 70 mm^2.

The cables used to interconnect the internal earth bus / CEB to the CET shall be green / yellow of minimum cross-sectional area 16 mm^2.

9.4.2 Sites Not Subject to Significant Risk of Lightning Strike

The cables used to interconnect the CEB to the earth stakes / mat, shall be green / yellow of minimum cross-sectional area 16 mm^2.

The cables used to interconnect the CEB to the CET shall be green / yellow of minimum cross-sectional area 16 mm^2.

9.5 Internal Earth Bus

9.5.1 Purpose of Internal Earth Bus and Where Required

The Design Approval Authority may specify that specific Telecommunications Equipment Rooms (e.g. train radio huts) be equipped with an Internal Earth Bus in accordance with this Clause. This is particularly the case for locations subject to lightning strikes (for example, from a radio tower / mast); for locations where the standard value of earth resistance as per Clause 13.5 cannot be met; or for large Telecommunications Equipment Rooms where the impedance of wire connections from the rack to the CEB may be excessive. Such an Internal Earth Bus shall form a low impedance distributed CEB for the purpose of earthing Telecommunications Equipment.

9.5.2 Installation of Internal Earth Bus

Applicable communications buildings or Telecommunications Equipment Rooms, including train radio huts, shall be fitted out with an internal earth bus in the form of a copper bar. The earth bus shall consist of a copper bar fixed to each wall of the equipment room, battery room and the technicians room (where included). Where the building has a wall feeder gland plate, the internal earth bus should be immediately below this where practicable. (Refer to Clause 12.2.4 for earthing of the wall feeder gland plate.) In other cases it should be at a height to facilitate easy connection of items needing earth connection within the building, typically 300mm above floor level.

The internal earth bus shall be of minimum dimensions 20 mm wide by 3 mm thick. For medium and large sized rooms it shall be 50 mm wide by 3 mm thick.

The earth bus is to be fixed securely to the building walls. For brick or concrete walls, 6 mm dyna-bolts fixed at 500 mm intervals are suitable. Equivalently secure methods shall be employed for other wall constructions. Where two earth bars are joined the joint shall be bolted together with two 6 mm by 12 mm hexagon head brass bolts placed diagonally. The joint shall then be soldered with soft silver solder. The joint shall then be cleaned and all residue flux removed.

Superseded by T HR TE 21002 ST

Where portable metal framed or sandwich construction buildings are used to accommodate equipment the internal metalwork and frame shall also be bonded to the internal earth bus.

Where appropriate the earth bus shall extend into each cable tray fitted in the equipment room. The earth bus in each cable tray shall be fixed at 500 mm intervals with 6 mm x 25 mm hexagonal head bolts (preferably stainless steel to minimise galvanic corrosion effects). These bolts shall also be used for terminating cabinet earths.

The Internal Earth Bus forms a distributed CEB. It shall be bonded to any other earth bar (e.g. MDF earth bar) by Green / Yellow cable of minimum CSA 70 mm^2 or by direct bolted and soldered connection as described above for joints. The connection to any gland plate shall be as per Clause 9.2.

Installation of the internal earth bus shall make allowance for the later connection of earth cables at appropriate locations. This may be, for example, by the provision of 6 mm earth studs affixed to the bus to which connections may be made by the use of suitable lugs and nuts or by suitably offsetting the bus from the wall surface to allow the later installation of bolts to which earthing cables may be connected.

10 Mains Supply and Earthing Arrangements

10.1 Mains Supply

Note that this Standard does not address details of the 240 V / 415 V design other than as they relate to earthing issues. In particular, Figures and text referring to single phase arrangements are not meant to exclude multi-phase arrangements and arrangements for emergency cut-over equipment for dual supplies are not addressed. Such designs shall be in accordance with relevant RailCorp Electrical Standards.

10.2 Mains Powered Sites External to the Electrified Rail Corridor

10.2.1 General

A Main Switch Board (MSB) shall be provided for the telecommunications facility, complete with MEN earth – neutral link and a main earth connected to a nearby earth stake in accordance with AS3000 and the supply authority's regulations.

A Distribution Board (DB) shall be provided within the Telecommunications Equipment Room, supplied from the MSB. (In some cases it may be suitable to incorporate the functions of the DB within the MSB.) The earth to the DB shall also be reticulated from the MSB.

Care shall be taken to ensure that any telecommunications cables connected to the site do not have components (pairs, sheath, moisture barrier etc) which are earthed at both that site and another site within the electrified rail corridor. See also Clause 14.1.

10.2.2 Sites with No Communications Earth Mat or Protective Earth Stakes

At sites external to the electrified rail corridor which do not include any communications protective earth stakes or earth mat, the Communications Earth System (CES, in accordance with Clause 8.1 of this Standard), or in special circumstances, a TRC (in accordance with Clause 8.2) shall be connected to the earth bar of the DB through a Communications Earth Terminal (CET).

Refer to Figure 1.

Superseded by T HR TE 21002 ST

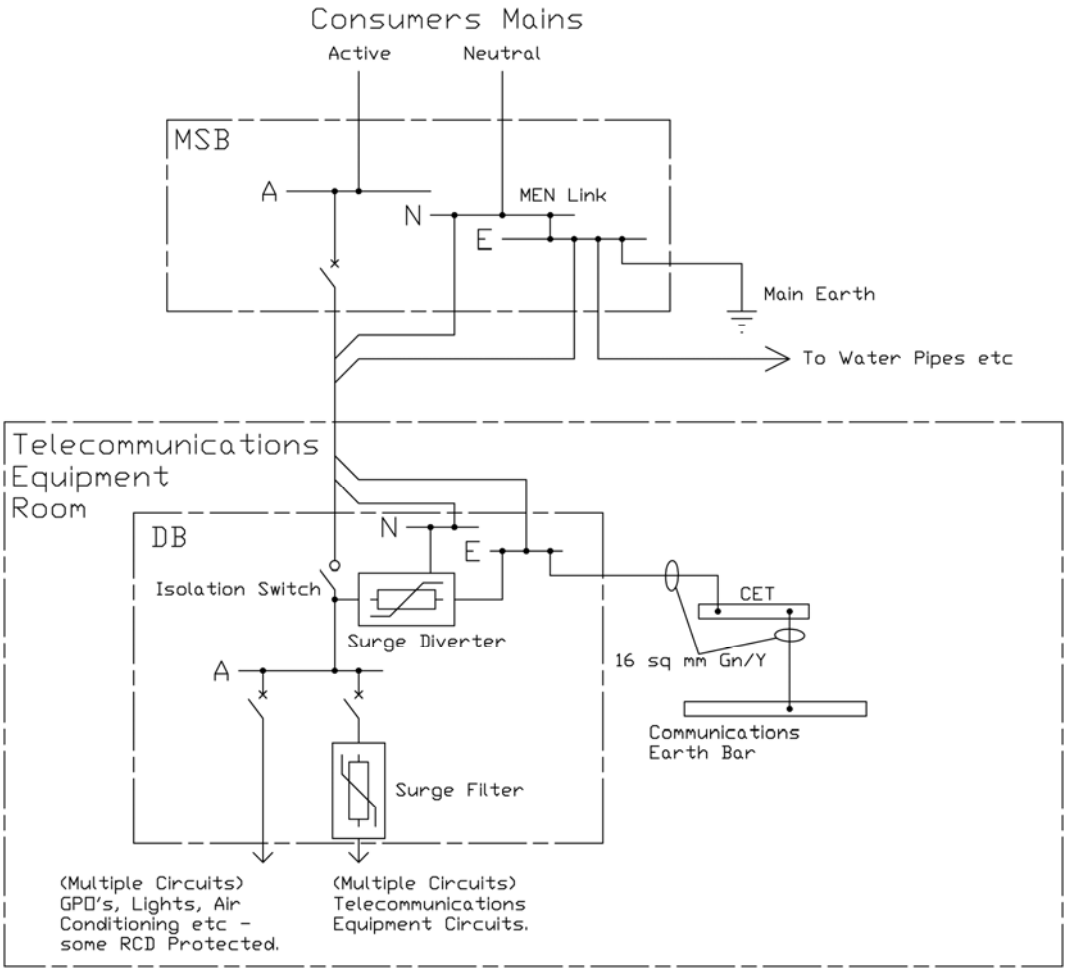

Figure 1 Earthing arrangements external to the rail corridor at sites without a communications earth mat or protective earth stakes

10.2.3 Sites with Communications Earth Mat or Protective Earth Stakes

At sites external to the electrified rail corridor which include communications protective earth stakes and/or an earth mat, those earth stakes and earth mat shall be bonded to both the Main Earth stake in accordance with AS/ACIF S009 Figure 1 Method 3 and to the Communications Earth Bar (CEB), thus also bonding the CEB to the LV Earth System.

Refer to Figure 2.

Superseded by T HR TE 21002 ST

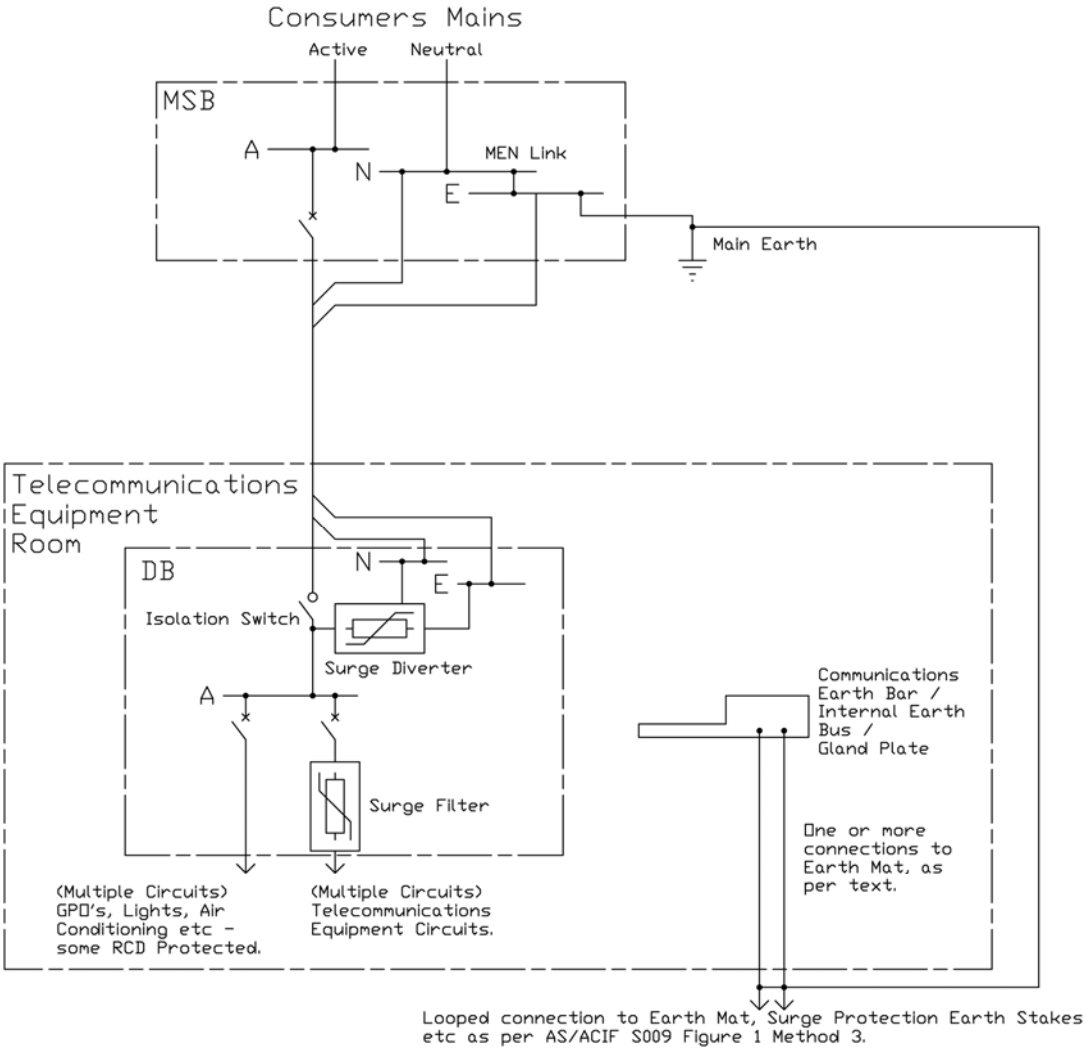

Figure 2 Earthing arrangements external to the rail corridor at sites with a communications earth mat or protective earth stakes

Superseded by T HR TE 21002 ST

10.3 Mains Powered Sites Within Electrified Rail Corridor

10.3.1 D.C. Isolation

Telecommunications equipment installed within the rail corridor shall provide effective separation of the local protective and telecommunications earth from the power distribution authority mains earthing system. All such installations shall be in accordance with RailCorp Specification EP12200020SP “Low Voltage Distribution Earthing” which describes the requirement for an isolating transformer for this purpose.

For any sites within the electrified rail corridor or otherwise exposed to significant dc leakage currents, site design shall also include measures to avoid any connection of site earth to the distribution authority MEN earth via secondary paths such as antenna cables or telecommunications cables originating outside the site.

10.3.2 Mains Installation and Connections

All installations shall be in accordance with RailCorp Specification EP12200020SP “Low Voltage Distribution Earthing”.

In addition to the requirements of EP12200020SP, dedicated isolation transformers shall also be installed where the supply is from the RailCorp high voltage network, unless the design demonstrates that electrolysis issues due to the connection of the telecommunications earth electrodes and earth mat to the earth at the Distribution Supply Main Switch Board (DSMSB) are acceptable.

The mains installation design shall ensure that no hazardous EPR will be introduced to the telecommunications site under foreseeable fault conditions.

A Distribution Board (DB) shall be provided within the Telecommunications Equipment Room, supplied from the DSMSB. The earth to the DB shall also be reticulated from the DSMSB. The Communications earth system (CES, in accordance with Clause 8.1 of this Standard), or in special circumstances, a TRC (in accordance with Clause 8.2) shall be connected to the earth bar of the DB through a Communications Earth Terminal (CET) to permit isolation during earth testing.

Any additional surge protection earth stakes or mat shall be connected to the CEB and thence to the CET.

Refer to Figure 3.

Superseded by T HR TE 21002 ST

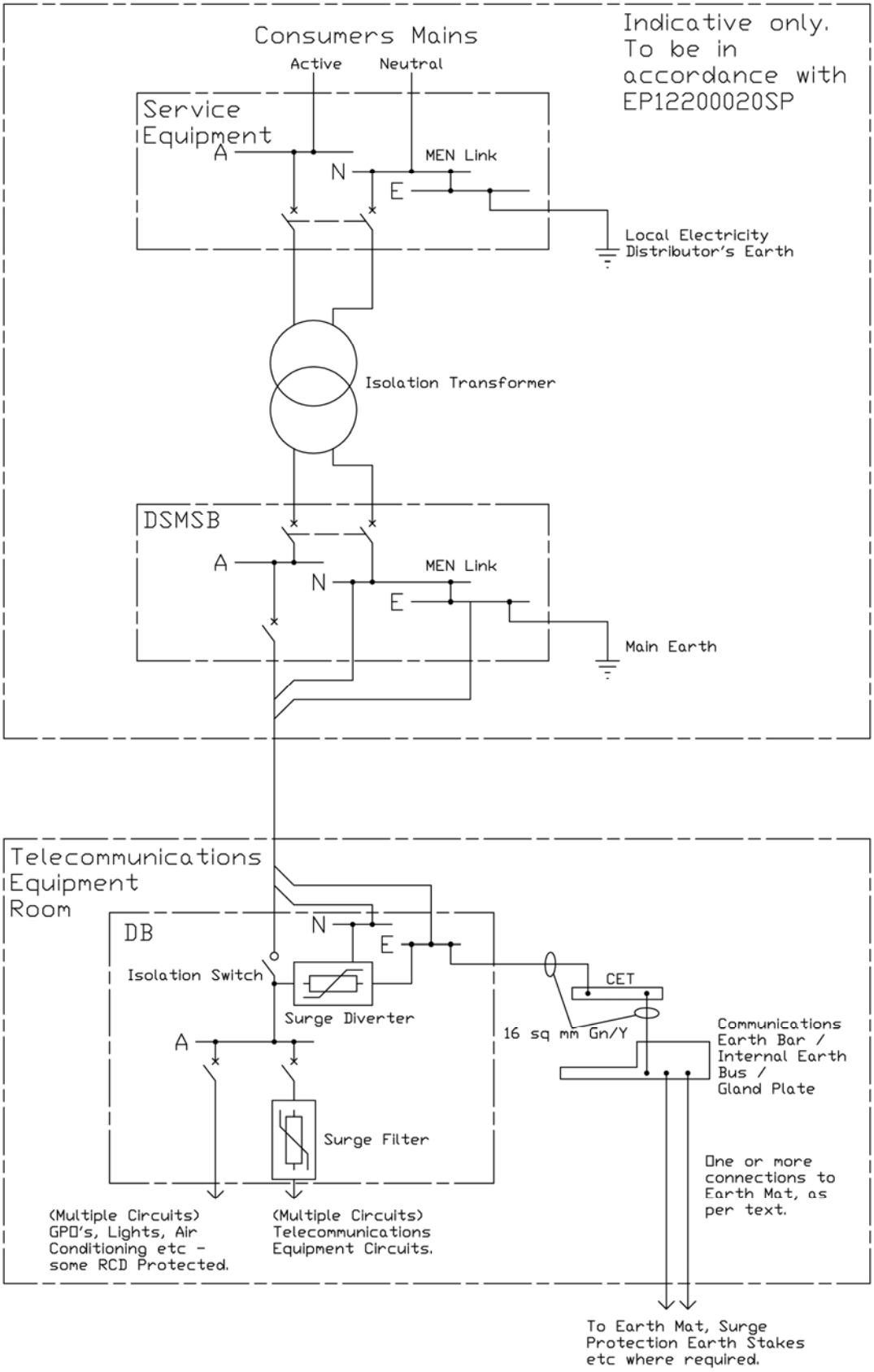

Figure 3 Earthing arrangements within the rail corridor

Superseded by T HR TE 21002 ST

10.3.3 Isolating Transformers

Isolating transformers shall be in accordance with EP12100020SP, EP17000011SP and AS/NZS 61558-1.

Isolating transformers for telecommunications sites shall be externally mounted.

The circuit breaker or isolating switch for the isolating transformer at the meter board or service equipment board from which the isolating transformer is supplied shall switch the neutral (if applicable) as well as active conductors. In accordance with EP12100020SP, isolating transformers shall be double insulated with no earth connection made to the case.

10.4 Mains Surge Protection

Telecommunications equipment shall be protected against surge currents and voltages on the power mains by means of a surge protection scheme incorporating both series surge filter and shunt surge diverter devices. Note that although the Figures show the minimal arrangement of separate units, a combined diverter and filter unit is the preferred option. Also note that the diverter may be in the DSMSB.

For sites that are particularly prone to lightning surges via the mains, the use of approved surge protection devices is recommended together with other measures to increase the surge impedance on the mains wiring such as installation inside metal conduit and coils in the cable.

As a minimum requirement, facilities such as lights, air conditioning and GPO's (not used for powering telecommunications equipment) need not be protected by series filters but shall be protected by shunt diverter devices. However, the preferred option is for full (series and shunt) protection of all circuits.

Two exceptions to the above are that circuits powering tower lighting (air warning lights etc) and circuits powering radio equipment owned by third parties must not be connected to the output side of series filters supplying RailCorp telecommunications equipment. This is because such circuits are susceptible to receiving lightning surges and therefore connecting them to the output side of a filter would negate the function of the filter in protecting telecommunications circuits.

10.5 Sites Without Mains Power

10.5.1 Sites with locally generated 240V a.c. & associated DB

Sites with a 240V a.c. DB supplied from a local source (e.g. inverter operating from solar powered source) shall be equipped with an electrical protection main earth electrode connected to the earth bar of the a.c. DB. There shall be a connection, at the DB or inverter unit, from the Neutral to Earth. The DB may be integral to the inverter unit.

These sites shall also be equipped with a CEB connected to the appropriate level of communications protective earth stakes and / or earth mat as required. The CEB shall be bonded to the a.c. DB earth bar via a CET.

Refer to Figure 4.

Superseded by T HR TE 21002 ST

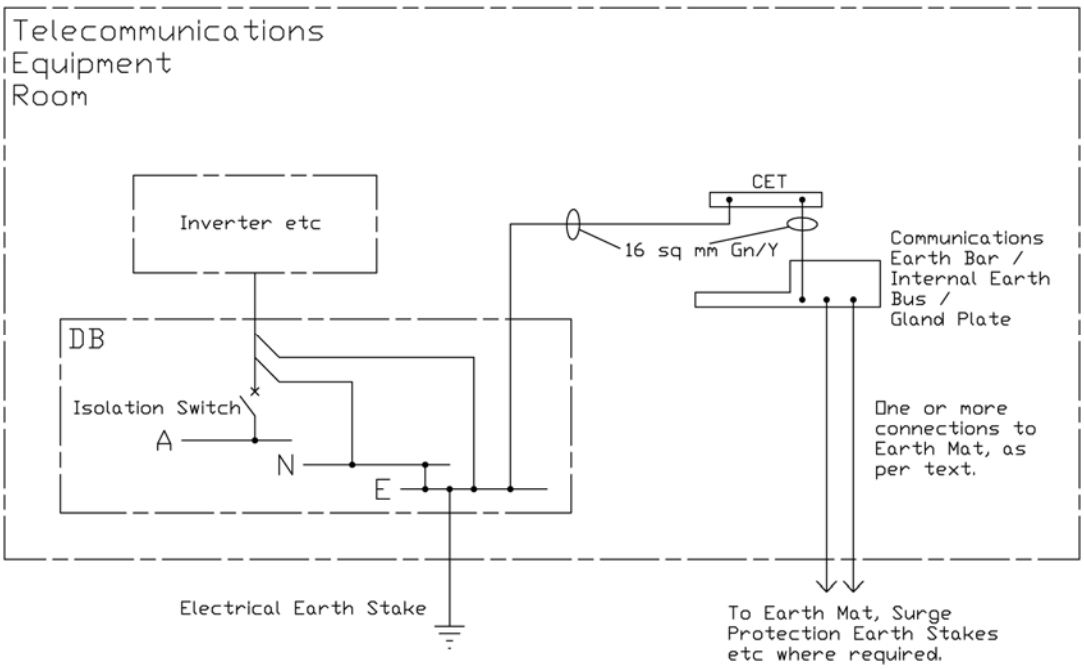

Figure 4 Earthing of Sites with Inverter Powered 240V a.c. DB

10.5.2 Sites without 240V a.c. DB

Sites without a 240V a.c. DB, for example sites powered by solar cells with only d.c. powered equipment, shall be equipped with a CEB connected to the appropriate level of communications protective earth stakes and / or earth mat.

Refer to Figure 5.

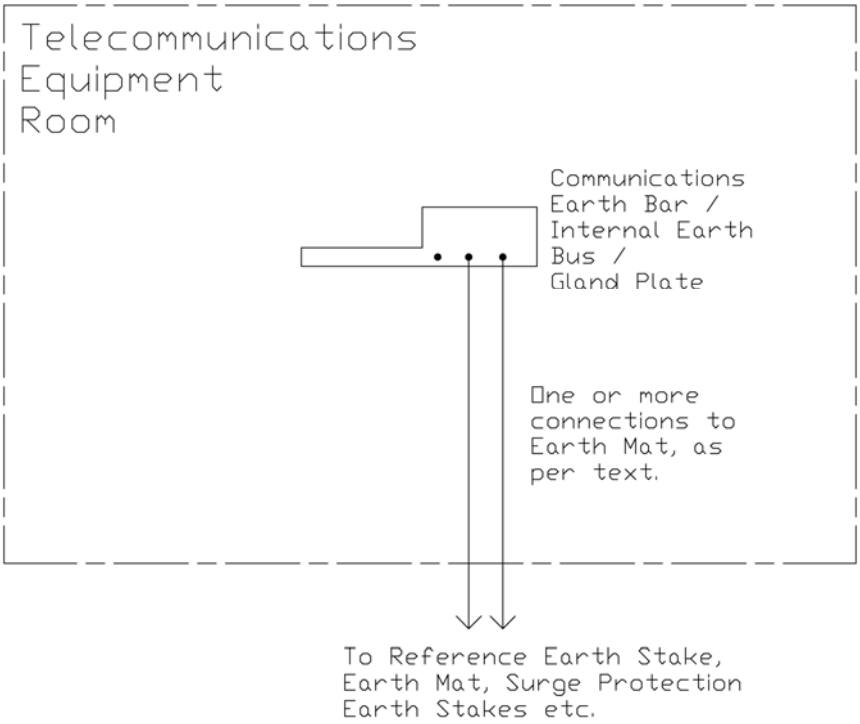

Figure 5 Earthing at Site without 240V a.c. DB

Superseded by T HR TE 21002 ST

11 Earthing of Racks, Cabinets, Runways etc

11.1 General

Note that within this Clause 11:

- Reference to “rack” includes “cabinet”.
- The requirement to connect a Green / Yellow earth cable to the CEB may be achieved by connecting it to the Internal Earth Bus (where such exists), as this bus acts as an extension of the CEB.
- All Green / Yellow cables shall have a minimum cross-sectional area (CSA) of 16 mm^2 unless otherwise specified.
- While the Figures show a typical connection of the CEB to the Earth Terminal of the a.c. DB via a CET, the actual bonding arrangements are to be as detailed in Clause 10.
- Reference to the positive d.c. terminal is to the reference terminal which is positive for a -48 V system. Where the d.c. system is the opposite polarity (e.g. radio +12 V systems) the negative terminal should be substituted.

11.2 Fixing of Earth Wires

All bolted connections shall use spring washers or similar, to ensure a positive connection of the earth cables to the MDF frames and cabinets.

11.3 Sites without Internal Earth Bus

11.3.1 D.C. Supply - Dedicated Earth Wire (DEW) Equipment

A rack containing d.c. powered equipment which is free of any connection (direct or indirect, within the equipment or within the rack wiring) between the incoming d.c. power supply and the rack, shall be earthed to the CEB with a separate Green/Yellow earth cable (3rd wire). Such a rack shall be known as a Dedicated Earth Wire (DEW) rack.

Where several DEW racks are in close proximity to one another, the earth bonding referred to above shall be achieved by bonding adjacent racks together with Green/Yellow earth cables and connecting one of the cluster of racks so formed to the CEB with another Green/Yellow earth cable.

Superseded by T HR TE 21002 ST

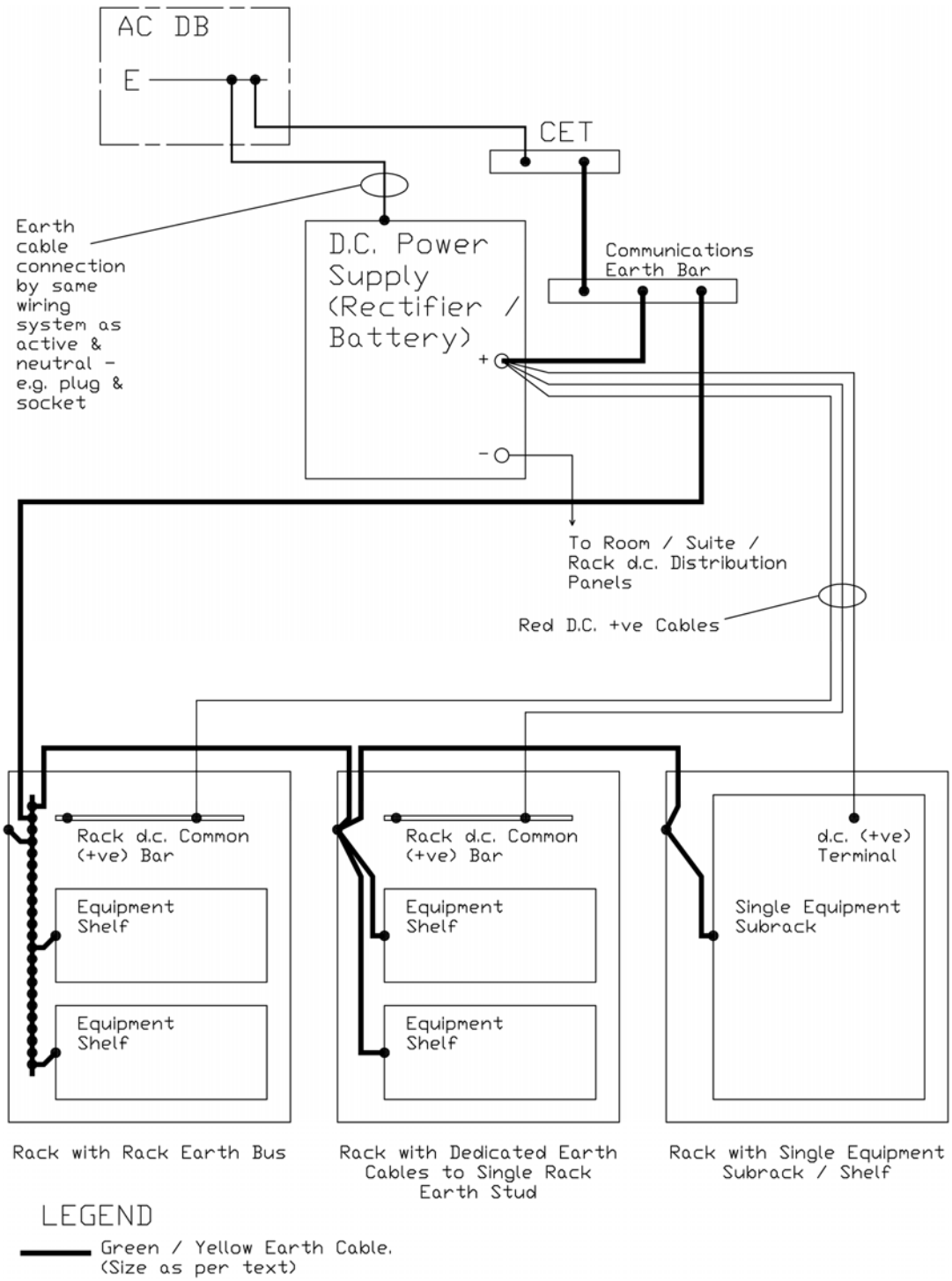

Figure 6 Earthing of DEW equipment racks

11.3.2 D.C. Supply - Power Earth Wire (PEW) Equipment

A rack containing d.c. powered equipment which includes any connection (direct or indirect, within the equipment or within the rack wiring) between the incoming d.c. power supply and the rack, shall utilise the power supply cable for earthing the rack to the CEB via the power supply and the link from the power supply reference (normally positive) to the CEB. Such a rack shall be known as a Power Earth Wire (PEW) rack.

Superseded by T HR TE 21002 ST

A separate Green/Yellow earth cable shall not be used to directly bond the rack to the CEB. However, where several PEW racks are in close proximity to one another, they shall be bonded together by bonding adjacent racks with Green/Yellow earth cables (but not connecting any of the cluster of racks so formed to the CEB with another Green/Yellow earth cable).

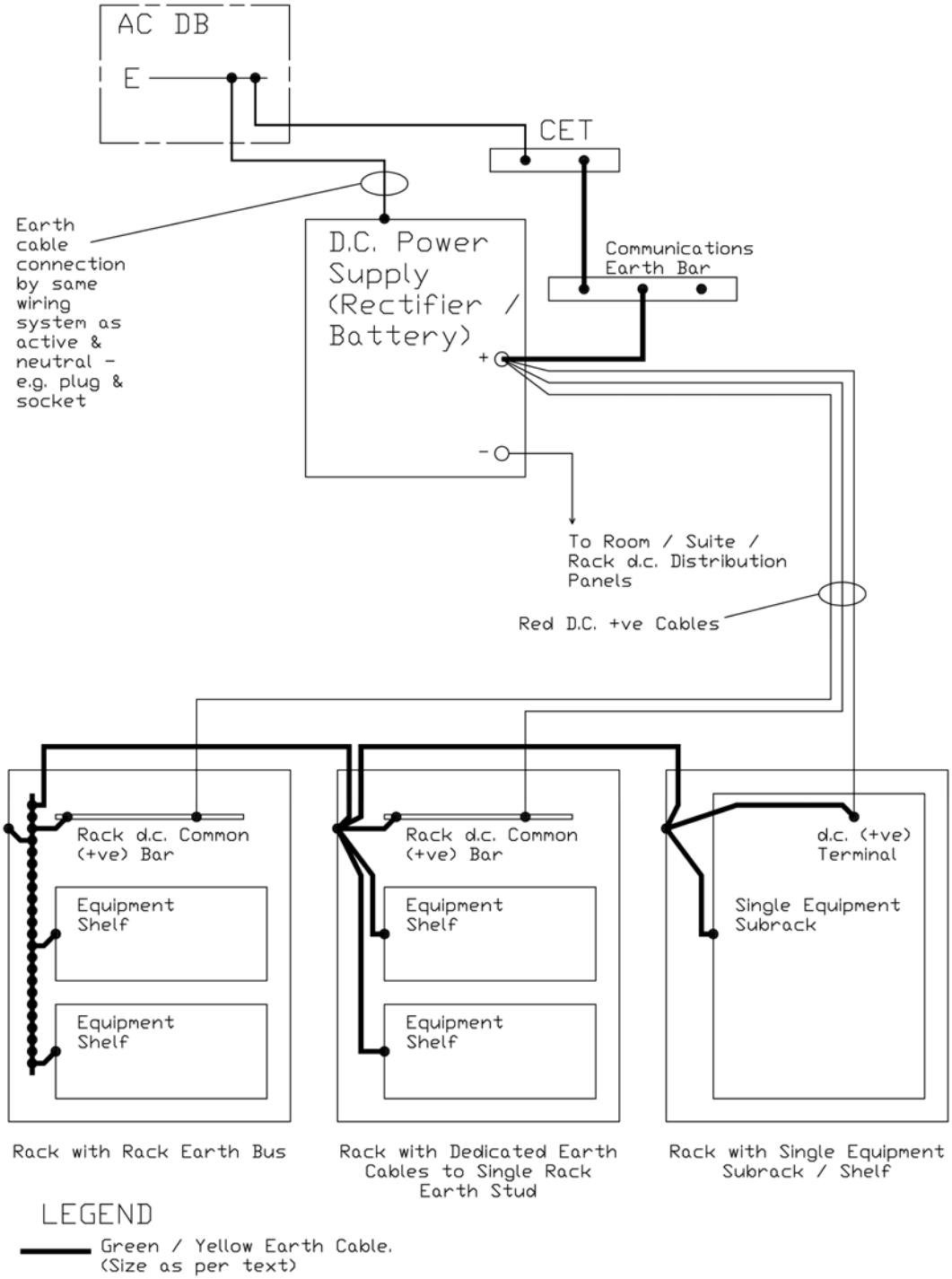

Figure 7 Earthing of Power Earth Wire Configuration (PEW) equipment racks

Superseded by T HR TE 21002 ST

11.3.3 Equipment Suitable For DEW or PEW Configuration

If the equipment within a rack which is capable of being wired for DEW configuration could operate just as satisfactorily under PEW configuration, then if that rack is installed in a room amongst PEW configured racks, it is permissible and in many cases preferable to wire it for PEW operation.

11.3.4 Double Insulated LV AC Equipment (Including Dual Mode AC/DC)

A rack containing a.c. powered equipment which is all double insulated may be treated in accordance with the requirements of other d.c. powered equipment in the rack. Where no other d.c. powered equipment exists in the rack, such a rack shall be considered to be a DEW rack for the purposes of earthing and bonding.

11.3.5 Earthed LV AC Powered Equipment (Including Dual Mode AC/DC)

A rack containing earthed a.c. powered equipment shall be earthed to the LV MSB in accordance with AS 3000 by the same wiring system used for active and neutral (e.g. plug and socket). Such a rack shall not contain any PEW d.c. powered equipment and shall be isolated from racks containing PEW d.c. powered equipment in accordance with Clause 11.6.

If the rack contains d.c. powered equipment or the equipment is dual mode a.c./d.c. supplied, the rack shall also be earthed to the CEB in accordance with Clause 11.3.1. In addition, some a.c. powered equipment may require earthing to the CEB for surge protection purposes. These requirements take precedence over avoiding earth loops. Refer to Figure 8.

Otherwise, if the rack contains only a.c. powered equipment, it should also be isolated, where practicable, from racks containing DEW equipment and from cable runways etc, to avoid earth loops due to the connection of the latter racks and runways to the CEB.

Superseded by T HR TE 21002 ST

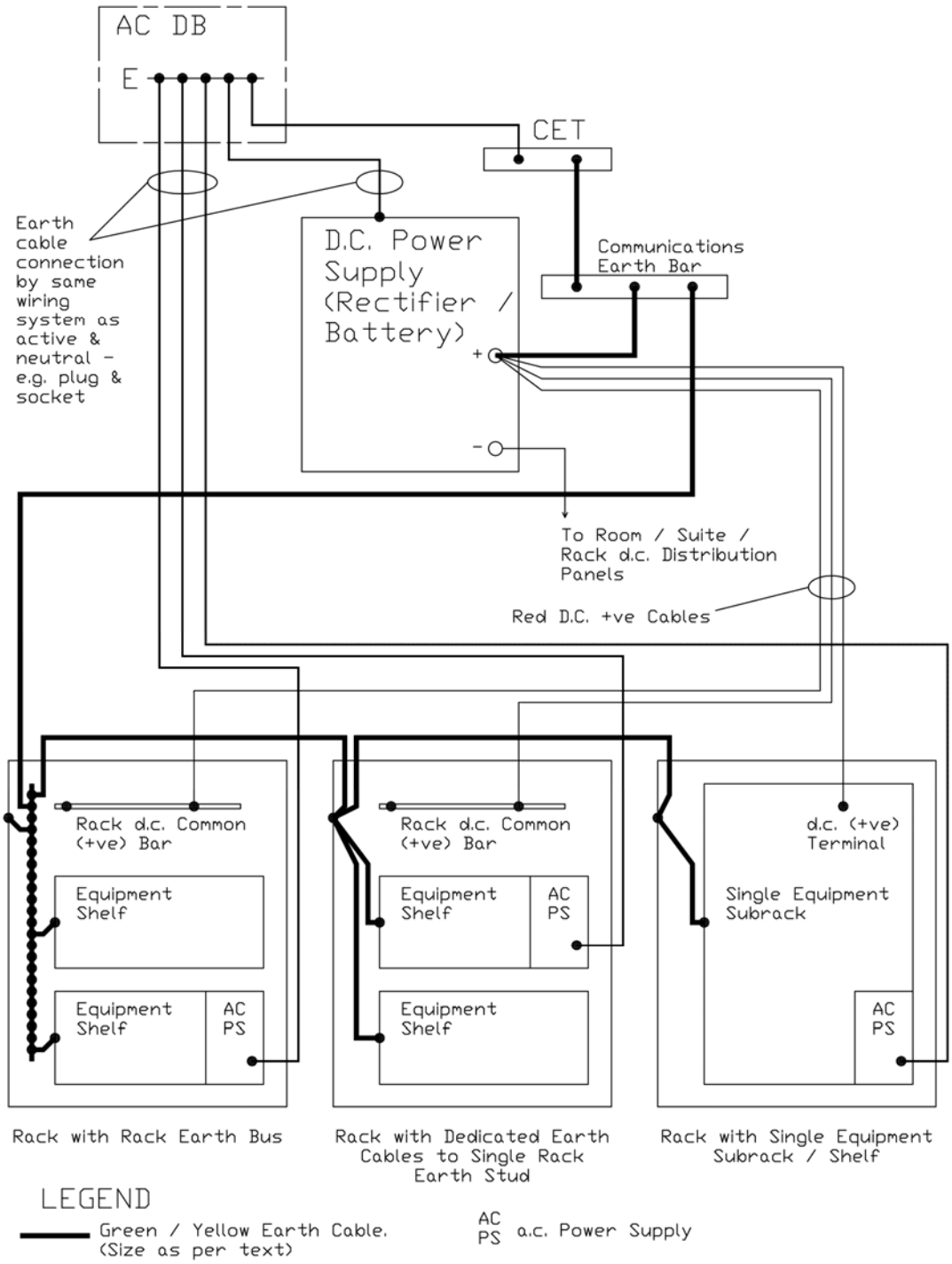

Figure 8 Earthing of Racks with Dual a.c./ d.c. Supplies

11.4 Sites with Internal Earth Bus

An Internal Earth Bus provides both a low a.c. and d.c. impedance. Therefore, while as far as possible the principles of rack earthing for DEW and PEW racks specified in the above Clause 11.3 should be followed, this is less important when an Internal Earth Bus is present.

In the case of DEW racks, individual racks or rack clusters shall be bonded to the closest appropriate point on the Internal Earth Bus in a similar manner to the bonding to the CEB specified in Clause 11.3.1.

Superseded by T HR TE 21002 ST

In the case of PEW racks, the Internal Earth Bus shall be utilised for both d.c. power reticulation (reference terminal) and low impedance earth reticulation.

Should excessive voltage drop or other problems arise, a design should be established to overcome the issue. This may take the form of separate earth bus legs for the two wiring configurations.

11.5 Rectifier / Power Supply Racks

Rectifier / Power Supply Racks shall conform to the requirements for racks containing a.c. powered equipment specified in Clause 11.3.5.

A Green / Yellow cable of CSA at least equal to the total for the d.c. power cables fed by the power supply (one polarity), shall bond the d.c. reference terminal (normally positive) to the CEB.

Preferably, the d.c. reference terminal should be floating with respect to the rack metalwork (other than by virtue of the bonding cable referred to in the previous sentence). This is in order to avoid earth loops via the MSB earth bar, the CET and the CEB.

Note that earth loops should not be avoided by means of using the bond to the CEB referred to in this subclause as the LV protection earth in lieu of a direct connection to the MSB / DB earth bar. This is because the link from the MSB / DB earth bar to the CET may be disconnected during earth testing operations (by a non-electrician) without disconnecting the power supply from the LV supply.

Refer to Figure 6 and Figure 7.

11.6 Racks Containing No Powered Equipment (including MDF's)

A rack containing only passive equipment shall be considered to be a DEW rack for the purposes of earthing and bonding.

MDF's and surge arrestor racks are particular examples of such racks. Note that, for these racks, it is important that the connection to the CEB or Earth Bus be as short and straight as possible.

Where practicable, MDF verticals are to be individually bonded to the CEB, as shown in Figure 9, but in any case they shall be clustered in groups of no more than three verticals. Figure 10 shows this acceptable alternative. 6 mm^2 Green / Yellow cable is sufficient for this purpose provided the cable lengths are less than 1.5 metres.

Superseded by T HR TE 21002 ST

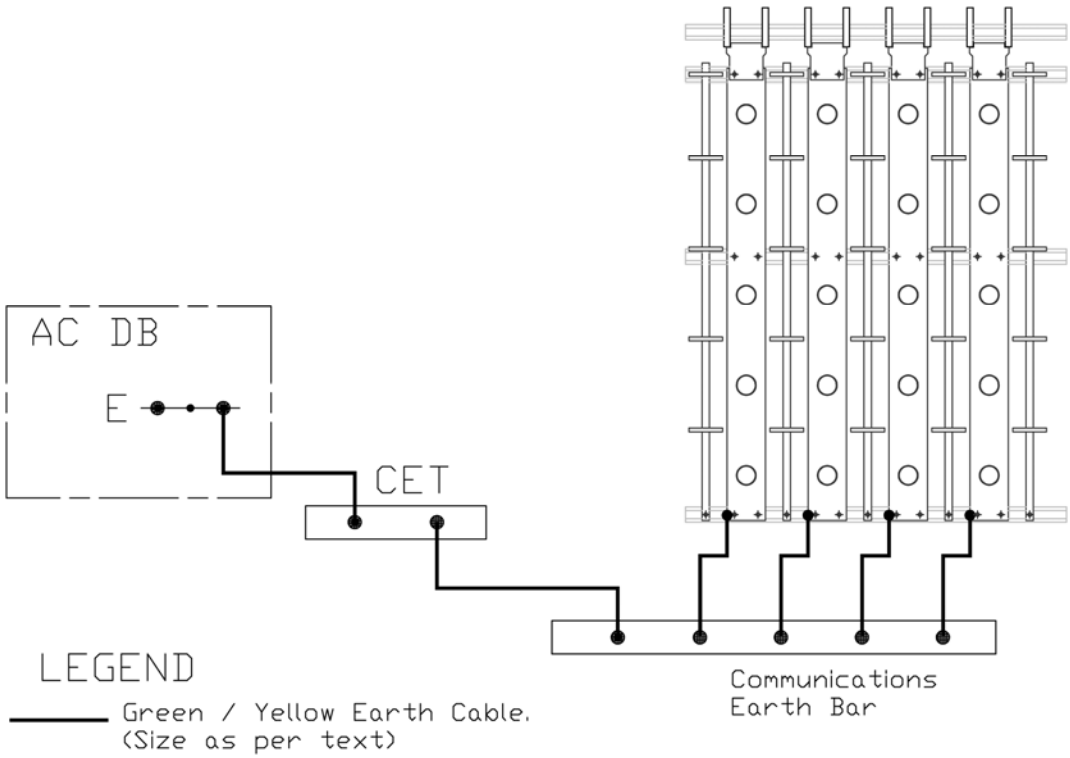

Figure 9 Earthing of MDF – Preferred Arrangement

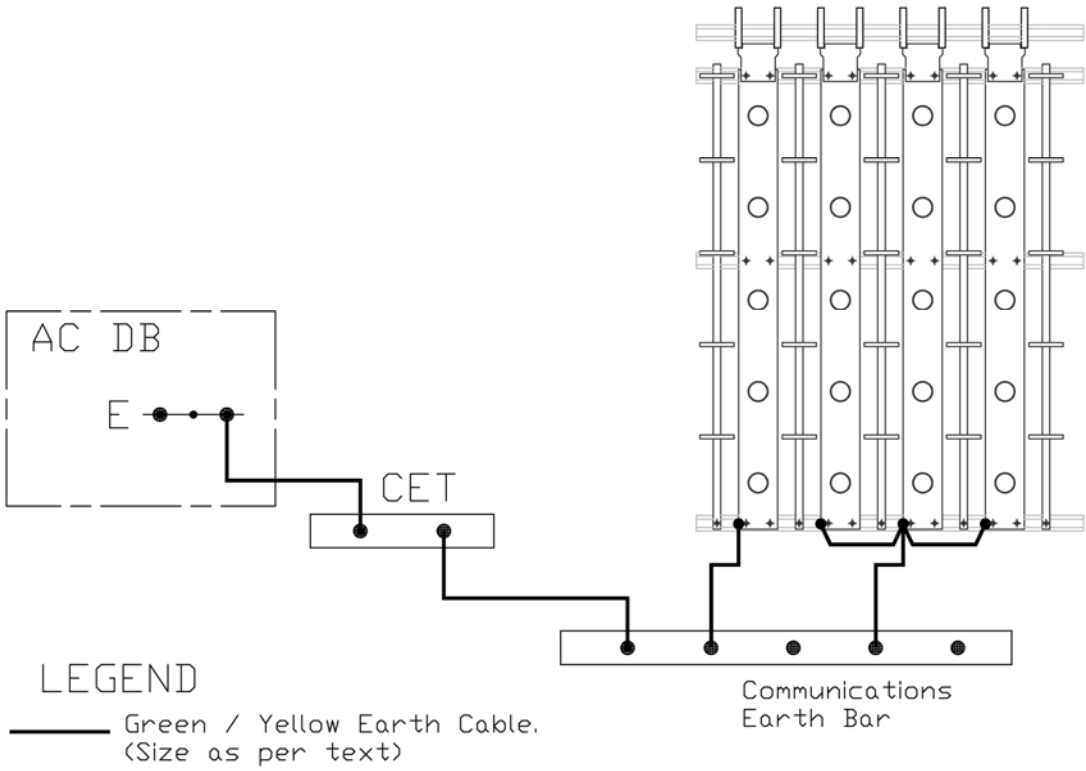

Figure 10 Earthing of MDF – Allowable Alternative Arrangement

Superseded by T HR TE 21002 ST

11.7 Isolation of Racks and Rack Clusters

Other than by the explicit earthing cables referred to in this Clause 11, racks shall be isolated from building and structural metalwork, conductive floors and cable runways. Particularly in the case of PEW racks, this is necessary to avoid power supply currents flowing through such paths, with the associated risks of electrolysis etc. This requirement also assists to avoid earth loops.

Similarly, clusters of PEW racks shall be isolated from clusters of DEW racks and from earthed a.c. powered racks.

Racks shall be isolated by the use of a controlled air gap (physical separation) of at least 50mm or insulating material (for example, a Polyester Mat/Polyester Film Composite, or a timber plinth).

11.8 Internal Rack Earth Wiring

Each rack containing three or more subracks shall be equipped with a rack earth bus to which the earth bonding conductors are attached. Where racks with only one or two subracks do not contain a rack earth bus, dedicated earth cables shall be used to connect items to be earthed to a single rack earth stud.

Green / Yellow bonding conductors shall bond the rack earth bus or rack earth stud to each subrack. Such conductors shall have a CSA at least as large as the power conductors supplying that sub-rack from the rack power distribution panel if such exists, or alternatively as large as the power conductors supplying that rack.

For PEW racks only, one and only one Green / Yellow bonding conductor shall bond the rack earth bus or rack earth stud to the rack's reference polarity common supply bar if such exists, or alternatively to the reference polarity terminal of the first sub-rack. Such conductors shall have a CSA at least as large as the power conductors supplying that rack.

11.9 Cable Runways

Cable runways shall be bonded to the CEB by Green / Yellow bonding conductors or via the Internal Earth Bus.

12 Lightning and Surge Dissipation

12.1 Surge Dissipation

To reduce surge impedance all earthing conductors designed to carry surge and lightning currents shall be as straight and short as possible. (See also AS/ACIF S009 Clauses 20.11.2.2 and 20.20.1.)

12.2 Lightning Protection (Sites with Masts or Towers)

12.2.1 General Principals

Lightning protection systems for sites with masts or towers shall be designed to meet the requirements of the specific site and in accordance with AS/NZS 1768:2007.

The mast earthing system shall be designed to dissipate lightning currents as efficiently as possible.

Superseded by T HR TE 21002 ST

An external earth mat in accordance with Clause 13.2 shall be used to minimise potential differences in the vicinity of the mast and building.

Lightning protection earthing shall be provided for antenna masts or poles and connected to the site protective earthing system. In the case of tilt poles, additional earth stakes shall be provided either side of (or if space precludes this, at) the point where the top of the masts comes to the ground and at least one intermediate position in order to control earth potential rise for staff working on the pole while lowered as shown in Figure 11.

12.2.2 Downconductors

Copper downconductors do not reduce the overall inductance of steel structures, and shall not be fitted on any steel tower or pole to avoid galvanic interaction.

Concrete poles shall be provided with a downconductor of not more than 0.2 ohms from finial to footing. Use of the pole's internal reinforcing steel for this purpose is acceptable provided that there are at least 3 such rods running the full length of the pole and these rods are welded together.

Where a suitable internal conductor does not exist a concrete pole shall be provided with a downconductor of flat copper strap of not less than 25mm x 1.5mm, fixed with stainless or non-metallic fasteners. There must be no joints in the downconductor run.

Copper ions will be present in rainwater dripping from any copper downconductor. For this reason the downconductor shall not be fixed near any ladder or other steel fittings on the pole. The preferred position is on the opposite face.

12.2.3 Finials

A finial (lightning rod) shall be fixed to the top of any pole or mast, protruding above the top of the highest antenna mounted thereon by not less than 1.5 metres. The copper downconductor, where fitted, shall be connected directly to the base of the finial with as little bending as possible, to minimise inductance.

12.2.4 Antenna Feeder Cables – Above Ground Building Entry

Feeders above ground shall enter the communications building through a gland plate of suitable metal no less than 3 mm thick, which shall be solidly earthed to external ground. The selection of the metal for the gland plate shall take account of possibly dissimilar metals to be connected to it. The earth connection from the gland plate shall consist of two separate runs of 25 mm x 1.5 mm copper strap extended vertically on the external wall of the building or less desirably extended immediately on the inside of the entry wall, be as straight as possible and bond to the Earth Mat. Where bends are necessary, only a large bending radius shall be used. This is an important part of the earthing design and minimises the voltage on the feeder if the tower is struck by lightning.

All antenna feeder cables and waveguides shall be earthed to the gland plate. Coaxial arresters shall be installed for all co-axial feeders. All flexible earth straps shall be attached to a stainless steel bolt of suitable size attached to the plate. All penetrations of and connections to the gland plate shall be weatherproofed on the outside of the building.

In installing coaxial arresters, good design principles to be followed with protection against

- inadvertent touching by personnel;
- physical explosion of device under a lightning strike and

Superseded by T HR TE 21002 ST

- moisture entering connectors between co-axial cables and arresters.

12.2.5 Antenna Feeder Cables – Below Ground Building Entry

Where the antenna feeder enters the building underground the feeder and coaxial arresters (for all co-axial feeders) shall be directly earthed to the CEB / internal earth bus, as close as possible to where the feeders enter the building.

12.2.6 Antenna Feeder Cables – Tower or Mast Bonding

Waveguides and the outer conductor of co-axial cables shall be bonded to the downconductor where such exists or to the steel of the tower / mast at the points whenever the cables change direction including the point next to the antenna and where the cables leave the mast. Suitable weatherproof grounding kits shall be used for this purpose. Where the copper tails are bolted to tower steel the joint shall be fully sealed with an impermeable compound.

Refer to Figure 12.

12.2.7 Typical Arrangements

Note that Figure 11 shows the usual arrangement for Train Radio sites where space is limited, buildings are small and tilting poles are used. Where there is insufficient space for the two radials shown in Figure 11, a single radial in line with the lowered mast may be used.

Figure 12 shows the typical arrangements for Microwave locations where a large steel lattice tower is part of the installation.

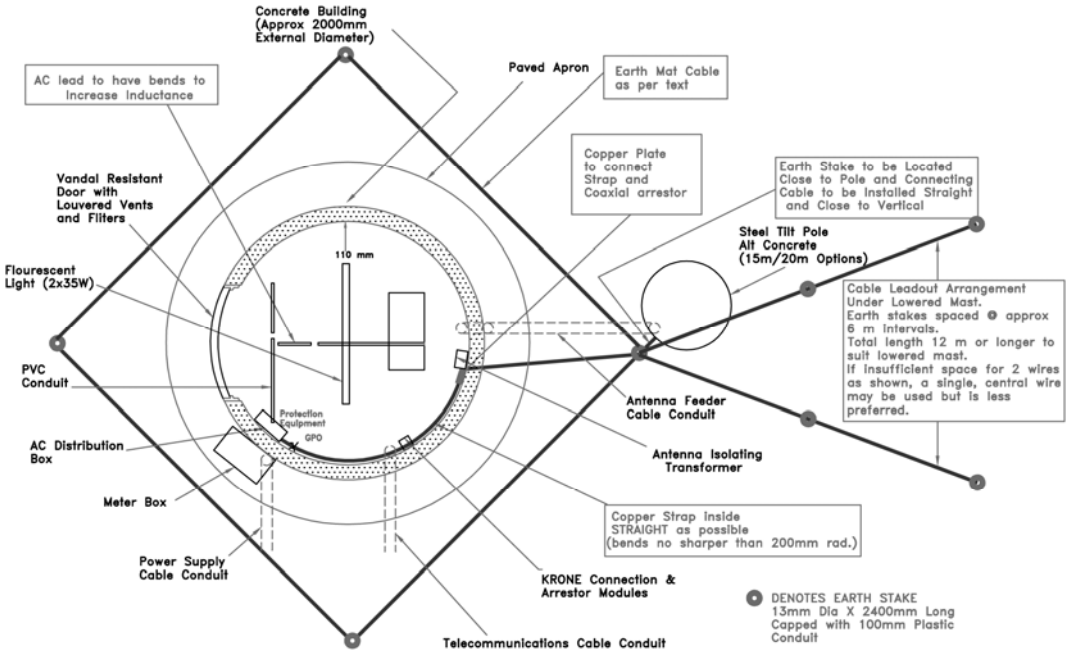

Figure 11 Train Radio site earthing where building is small, space is limited and tilting poles are used

Superseded by T HR TE 21002 ST

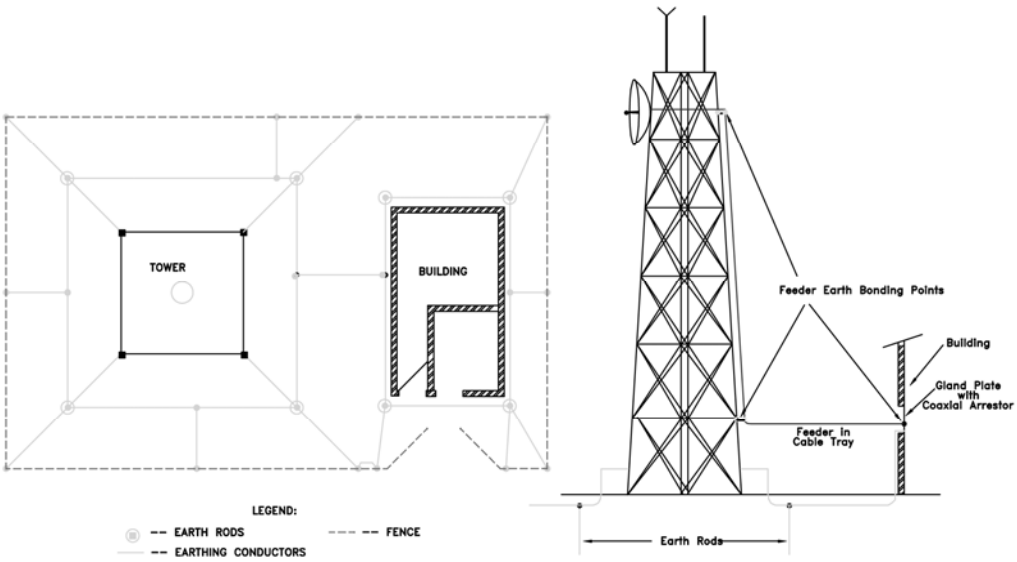

Figure 12 Earthing at a site with a tower

13 Earth Mat and Earth Stakes

13.1 Purpose

The earth mat and/or earth stakes are required to as part of the lightning and surge protection system and to achieve the nominated earth resistance (Clause 13.5). In addition, an earth mat is used as mitigation against different earth potentials within the compound.

13.2 Earth Mat

An earth mat shall be provided at any site with a mast or tower. An earth mat may also be provided at other sites to achieve the required earth resistance.

The earth mat shall consist of a series of interconnecting bare copper conductors forming a rectangle around the building and radials from the tower / mast. These conductors shall be buried in the ground at a minimum depth of 500 mm unless, in rocky terrain, approval is obtained from the appropriate Design Approval Authority for a lesser depth. The trench shall be no closer than 1 metre from buried metallic services or 200mm from non-metallic services. It shall also be no closer than 4 metres from the Signals Main Earth mat and from the TFEE where applicable.

The bare copper conductor used for the earth mat shall be no smaller than 70 mm^2 (19/2.14) or equivalent copper strap.

The earth mat shall be directly bonded to the antenna feeder gland plate (where such exists) in accordance with Clause 12.2.4 or, where no gland plate exists, to the Internal Earth Bus / CEB by green / yellow insulated copper cable in accordance with Clause 9.4.

The earth mat shall also be bonded to each tower leg (where applicable), to each corner and centre post of the compound fence if provided and each gatepost. Refer to Figure 12.

The connections to the tower fastenings, corner posts and gateposts, etc. as applicable shall be by green / yellow insulated copper cable no smaller than 70 mm^2.

Superseded by T HR TE 21002 ST

Copper earthing strap or cable shall not be placed in direct contact with steel masts or fittings to avoid electrolytic corrosion. Stainless steel fittings shall be employed at joints except in the case of coaxial cable bonding.

Use of the reinforcing steel in building or tower foundations to augment the ground system is permissible provided that a stainless steel fitting separates such steel from any copper.

All other metal structures in the compound, other than specifically separate earth systems such as the Signals Main Earth or the TFEE of the TRC system, shall also be bonded to the earth mat. These include handrails, pipes etc.

Within the electrified corridor, where a LV earth electrode exists at the location, the earth mat shall be indirectly bonded to it via the CEB, CET and earth bars within LV switchboards. Outside the electrified corridor, where a LV earth electrode exists at the location, the earth mat shall be directly bonded to it in accordance with AS/ACIF S009 Figure 1 Method 3. Refer to Figure 2.

The direct connection to the LV earth, if applicable, shall be by green / yellow insulated copper cable no smaller than the main earth conductor.

13.3 Earth Electrode

Earth electrodes shall consist of standard copper bonded steel or stainless steel stakes of not less than 1.8m length with a minimum diameter of 13 mm. To obtain the best effect electrodes should not be spaced closer than a distance of at least twice their length. Slip-on joiners may be employed if soil conditions permit the driving of more than one length of rod.

Where the earth stake is installed in a borehole due to rocky terrain, the top of the stake should be approximately 160 mm below the ground surface. The bore hole shall be back-filled with an approved earth enhancement material to the manufacturer's instructions. Any earth enhancement material used must not leach into or otherwise pollute the water table or soil and must retain its earth resistance without maintenance irrespective of soil water levels. A capped plastic conduit (or other suitable material) lid shall then be fitted over the earth stake to provide a point of inspection and protection of the earth stakes. See Figure 13 below.

Where an earth mat is installed, a minimum of 4 earth electrodes, bonded to the earth mat, shall be placed at the corners of the building. In the case of radio sites additional earth stakes shall be bonded to the earth mat radials to achieve the required earth resistance as shown in Figure 11 and Figure 12, making due allowance for the particular site situation.

Superseded by T HR TE 21002 ST

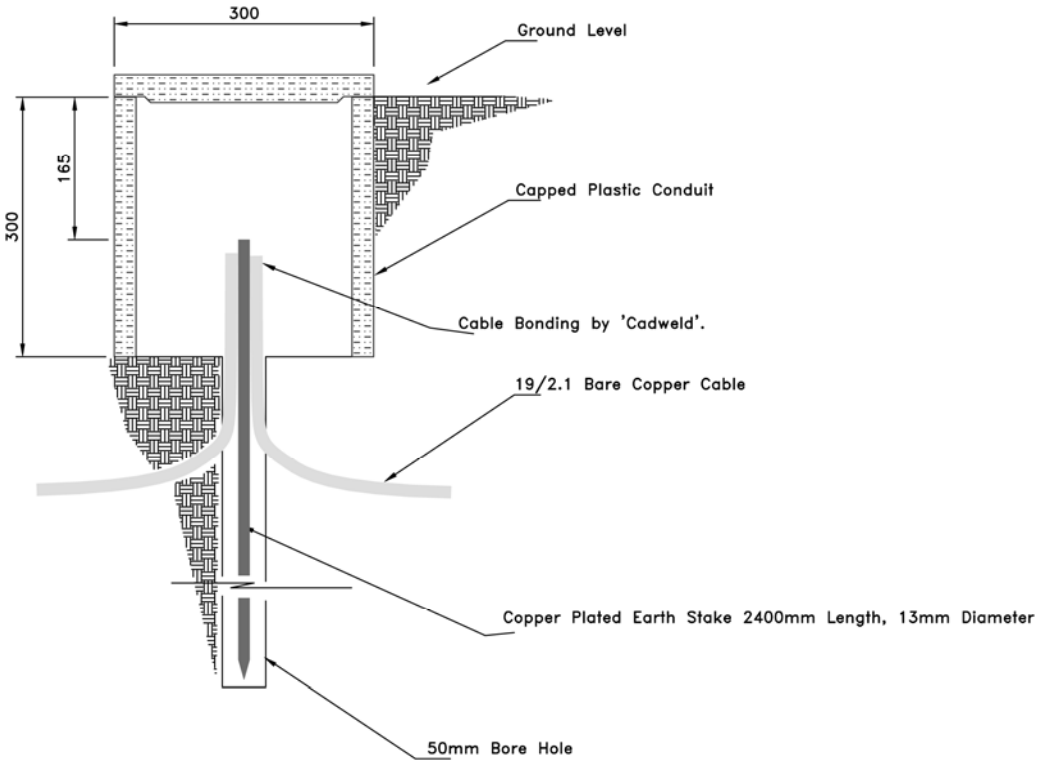

Figure 13 Earth Electrode Installation in Borehole

13.4 Earth Cable Bonding

All cable or earth strap bonding to earth stakes shall be carried out as shown in Figure 13 by the "Cad weld" method. The bond shall be hermetically sealed or otherwise protected to avoid any possible corrosion at the bond. All other cable bonds shall be carried out in a similar manner. The hermetic sealing may be achieved by wrapping the bond in corrosion prevention tape. Petrolatum tape is suitable for this application. Bronze or stainless steel clamps may be used above ground only.

Above ground cable connections to tower footings, fence posts and gateposts shall be by heavy-duty tin plated copper lugs. In the case of tower footings the connection shall be of no lesser security than a crimped, closed lug, lock-nutted onto a stud of minimum size 12 mm. Otherwise copper earthing strap or cable shall not be placed in direct contact with steel masts or fittings to avoid electrolytic corrosion. Stainless fittings shall be employed at joints.

13.5 Earth Resistance

The earth resistance, measured in accordance with AS/NZS 1768:2007 Appendix C, shall be less than 2 ohms for sites with a mast or tower or 10 ohms for sites without a mast or tower.

14 Communications Cables

14.1 Direct earth bonding of cable sheath etc.

The sheath, screen, moisture barrier, armour etc (as applicable) of RailCorp Communications cables shall be earthed to the CEB (via the internal earth bus where appropriate) only at the “city” end of the cable or not at all. At locations without mains power, the sheath of the “city” end of communications cables may be earthed to the

Superseded by T HR TE 21002 ST

Signals earth, but it is preferred to simply bond the sheaths of in and out cables such that they are earthed only at Telecommunications Equipment Rooms.

MDF's etc shall be located to facilitate external cables being earthed, where appropriate, to the CEB / internal earth bus as close as possible to the point of entry to the building.

14.2 Indirect earth bonding of cable sheath etc.

A gas-filled surge suppression device may be used in situations where direct earth bonding of cable sheath, screen, moisture barrier, armour etc is disallowed by Clause 14.1.

14.3 Non-RailCorp Communications Cables

Non-RailCorp entities shall not earth the sheath, screen, moisture barrier, armour etc of their communications cable(s) at the installation within the rail corridor.

15 Signals Earth

A Signals earth may also be installed or planned at the site in which case an integrated earthing system shall be designed and approved by both the Chief Engineer, Signals and Chief Engineer, Telecommunications or their nominated representatives.

The Signals Earth, where it exists within the same building as the Communications Earth, shall be bonded to it via a differential (transient) earth clamp, but shall not be directly bonded without approval from the Chief Engineer, Signals.

16 Earth Isolation

Continuous metallic structures (fences, pipes etc) required to be bonded to the Earth Mat under Clause 13 in the electrified corridor must have appropriate isolation sections to prevent electrolysis and other stray-current issues.

In particular:

- Where the railway boundary fence forms one side of the compound fence, isolation panels shall be installed in it each side of the compound in accordance with RailCorp Civil Specification 511 "Boundary Fences".
- Any metallic pipe or conduit which is bonded to the earthing system shall have insulation sections installed where the pipe exits the compound.

Superseded by T HR TE 21002 ST

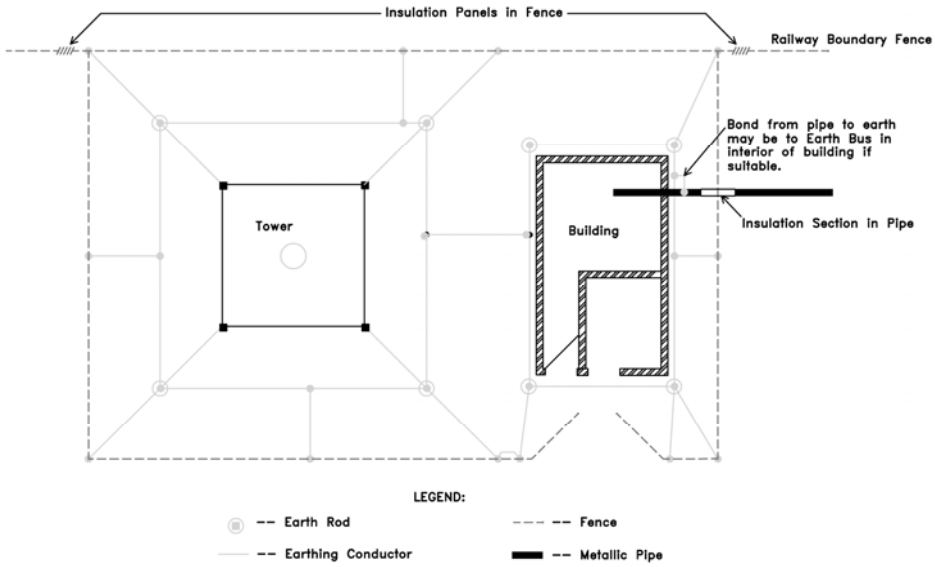

Figure 14 Earth Isolation