For queries regarding this document
standards@asa.transport.nsw.gov.au
www.asa.transport.nsw.gov.au

Technical Note

TN 035: 2014

Issued date 01 May 2014
Effective date 01 May 2014

Subject: Withdrawal of EP 11 00 00 07 SP Design Technical Reviews for Electrical SCADA Equipment

This technical note is issued by the Asset Standards Authority as a notification to remove from use RailCorp document EP 11 00 00 07 SP *Design Technical Reviews for Electrical SCADA Equipment,* Version 1.1 and its associated form EP 11 00 00 07 SP FM 01.

EP 11 00 00 07 SP and EP 11 00 00 07 SP FM 01 are legacy documents and should be used for reference purposes only. ASA procedure T HR EL 11001 PR *Design Technical Reviews for Electrical SCADA Equipment,* Version 1.0 and its associated form T HR EL 11001 PR F1 replace these documents.

Authorisation				
Signature	**Technical content prepared by**	**Checked and approved by**	**Interdisciplinary coordination checked by**	**Authorised for release**
Name	Matthew Percival	Neal Hook	David Spiteri	Graham Bradshaw
Position	Principal Engineer SCADA	Lead Electrical Engineer	Chief Engineer Rail	Principal Manager Network Standards & Services

© State of NSW through Transport for NSW

Superseded by T HREL 11001 PR F1

Version Control for the I/O Schedule Contained in EP 11 00 00 07 SP Design Requirements for Electrical SCADA Equipment

Version	Date	Person	Change
V1.0	7/03/2012	M Percival	First version after consultation in 2011 with Chris Lilly (Principal Engineer Substations), Wes Burgess (A/System Control Engineer), Anthony Orr (SCADA System Engineer), Jack Siu (Technical Specialist Protection)

Superseded by T HR EL 11001 PR F1

Instruction Notes

1	This spreadsheet is the Sample I/O Schedule as contained in the SCADA Procedure EP 11 00 00 07 SP Appendix F. The last sheet is the full I/O Schedule, which lists reasons why some indications are not required
2	There are also sheets containing wiring layouts for SCADA I/O
3	See the SCADA Procedure EP 11 00 00 07 SP for more information about the I/O Schedule
4	Consult the protection concept to determine particular protection indication requirements
5	The Protection Standard states: Every operation of a protection relay shall result in an individual alarm. The alarm shall enable the ESO to accurately identify the protection scheme that has operated.
6	If a protection relay has more than one function (eg A∅ and C∅ overcurrent elements), then where practical each function shall have a separate alarm output.
7	Indications from one relay should not come via the I/O of another relay.
8	Only one pair of Bus Tie CBs should have cable diff trip indications
9	Rectifier ACCBs usually have a P127 (OC) relay and a P124 (Backup OC) relay
10	New Tx's usually have a P127 (OC) relay & above 1MVA also have a P632 (differential) relay
11	New 11kV & 33kV feeders usually have P521 (PW) & P127 (OC) relays
12	The presence of a fault indicator will need an indication and a remote reset.
13	DNP Index = Master Station Slot x 256 + Master Station Channel (NB This is modified for Invensys RTUs to match 32 channel I/O cards)
14	The RTU channel number starts at '1' whereas the Master Station Channel start at zero.
15	The 'Signal Type' PO changes to DO in the terminal numbering
16	The Master Station does not have a Rack Number. Therefore the Master Station Slot Number = (RTU Rack Number - 1) x 12 + RTU Slot
17	Rack, Slot, Channel are used to calculate the terminal number
18	Failsafe (normally closed contact) is the RailCorp preference for alarm indications.
19	An inverted (non failsafe) input means the external contact is normally open and closes when the external device state becomes abnormal.
20	Virtual indications are either RTU software variables or indications received through a serial/ethernet links
21	VTs are normally 33kV/110V (37.5kV/125V) or 11kV/110V (12.5kV/125V), CTs normally have 1A secondary windings
22	Voltage transducers are normally 125V/10mA, Current transducers are normally 1A/10mA
23	The transducer type and model number shall be included in the I/O list
24	It is best to allocate RTU channels to functions in the same order as the functions appear in the cable schedule.
25	Modbus addresses shall be included
26	Virtual indications from one device should be placed in a group of 16 (one slot) on their own so that if comms are failed the Master Station slot fails as well
27	Identify 2 pole CBs where indications come from N/O and N/C contacts of the same device
28	I/O should be split between batteries, bus sections and I/O cards so that supplies are kept separate.
29	The common negatives shall only be connected to cards with the 125V DC supply from the same battery.
30	Diagram EL0476613 shows ladder logic for the rectifier control PLC
31	Terminals on RTU Terminal Rail are arranged to suit the RTU hardware modules. Another two terminals are for 125V negative.
32	Terminals on Field Terminal Rail are arranged to suit the field cables.

Abbreviations	
DI	Digital Input
AI	Analogue Input
PO	Pulse Output
DO	Digital Output
ILIS	Intelligent Ligh Information System
IGIS	Intelligent Gas Information System
MTA	An automatically reset relay with a hand reset flag. It can trip multiple ACCBs.
MTM	A manually reset relay with a hand reset flag. It can trip multiple ACCBs.

UP ELL 11001 DDD F1 Uncontrolled when printed

Yellow Fill = Conditional I/O

SCADA Equipment Name	SCADA Plant	SCADA Desig	From (Field Equipment Name)	Battery	Cable No	Core No	Field Device Term.	Signal Type	Signal Description	Signal Status	CT or VT Ratio	RTU Rack	RTU Slot	RTU Chan	Terminal	Master Station Mosaic Quantity (Point)	Master Station DNP Index	Master Station I/O Type	Master Station Slot	Master Station Chan	Master Station Invert	Hard wired	Comment
33kV Feeder			33kV Feeder Panel	1	S1000	1	X15:01		Control +ve						R1S10DO/CH2-a							Y	
33kV Feeder	ACCB	7XX	33kV Feeder Panel	1	S1000	2	X15:03	PO	Remote Close Command			1	10	4	R1S10DO/CH2-b	Close	2561	PO	10	1		Y	
33kV Feeder			33kV Feeder Panel	1	S1000	3	X15:02		Control +ve						R1S10DO/CH1-a							Y	
33kV Feeder	ACCB	7XX	33kV Feeder Panel	1	S1000	4	X15:04	PO	Remote Open Command			1	10	3	R1S10DO/CH1-b	Open	2560	PO	10	0		Y	
33kV Feeder	ACCB	7XX	33kV Feeder Panel	1	S1001	1	X15:08	DI	ACCB Open	Energised = CB Open		1	5	1	R1S5DI/1	Status(1)	1280	DI	5	0		Y	
33kV Feeder	ACCB	7XX	33kV Feeder Panel	1	S1001	2	X15:09	DI	ACCB Closed	Energised = CB Closed		1	5	2	R1S5DI/2	Status(0)	1281	DI	5	1		Y	
33kV Feeder	Switch	7XX ISOL	33kV Feeder Panel	1	S1001	3	X15:10	DI	Disconnector Open	Energised = Disc Open		1	5	3	R1S5DI/3	Status(1)	1282	DI	5	2		Y	
33kV Feeder	Switch	7XX ISOL	33kV Feeder Panel	1	S1001	4	X15:11	DI	Disconnector Closed	Energised = Disc Closed		1	5	4	R1S5DI/4	Status(0)	1283	DI	5	3		Y	
33kV Feeder	Switch	7XX EARTH	33kV Feeder Panel	1	S1001	5	X15:12	DI	Earth Switch Open	Energised = ES Open		1	5	5	R1S5DI/5	Status(1)	1284	DI	5	4		Y	
33kV Feeder	Switch	7XX EARTH	33kV Feeder Panel	1	S1001	6	X15:13	DI	Earth Switch Closed	Energised = ES Closed		1	5	6	R1S5DI/6	Status(0)	1285	DI	5	5		Y	
33kV Feeder	ACCB	7XX	33kV Feeder Panel	1	S1001	8	X15:15	DI	CB Motor Spring Charged	Energised = Charged		1	5	8	R1S5DI/8	SpringCharged	1287	DI	5	7		Y	Add delay at Master Station if this comes up while charging
33kV Feeder	ACCB	7XX	33kV Feeder Panel	1	S1001	9	X15:16	DI	ILIS Trip	Energised = Trip		1	5	9	R1S5DI/9	ILISTrip	1288	DI	5	8	Y	Y	
33kV Feeder	ACCB	7XX	33kV Feeder Panel	1	S1001	10	X15:17	DI	ILIS Fault	Energised = Healthy		1	5	10	R1S5DI/10	ILISFault	1289	DI	5	9		Y	
33kV Feeder	ACCB	7XX	33kV Feeder Panel		IA001	W	X3:1	AI	B Phase AC Current +ve	0-10 mA = 0 – 500 A	500/1A	1	5	33	R1S5AI/CH33+	Current	1312	AI	5	32		Y	Transducer is 1A/10mA
33kV Feeder	ACCB	7XX	33kV Feeder Panel		IA001	B	X3:4		B Phase AC Current -ve			1	5	33	R1S5AI/CH33-							Y	
33kV Feeder	ACCB	7XX	33kV Feeder Panel		IA001	S			Screen													Y	
33kV Feeder	ACCB	7XX	33kV Feeder Panel	1	CM957	PR1	X15:32,33	PULSED	EDMI Mk6E kWh Meter (p10, output 1)	Energised = Pulse		1	5	10	R1S5DI/10	Energy	1290	DI	5	10		Y	Bulk supply feeders only.
33kV Feeder	ACCB	7XX	33kV Feeder Panel	1	IA160			AI	Power Factor	0-10mA = 0-1	1/10mA	1	5	34		PowerFactor	1313	AI	5	33		Y	Bulk supply feeders only.
33kV Feeder	ACCB	7XX	33kV Feeder Panel	1	S1002	2	X15:30	DI	VT MCB Closed (Directional Protection Voltage Fail)	Energised = MCB Closed		1	5	12	R1S5DI/12	DirProtVoltage	1291	DI	5	11		Y	
33kV Feeder	ACCB	7XX	33kV Feeder Panel	1	S1004	1		DI	Low Gas	Energised = Gas Level OK		1	5	9	R1S5DI/9	Low Gas	1294	DI	5	14		Y	For outdoor SF6 switchgear
33kV Feeder	ACCB	7XX	33kV Feeder Panel	1	S1004	2		DI	Low Gas Lockout	Energised = Locked out		1	5	10	R1S5DI/10	Low Gas L/O	1295	DI	5	15	Y	Y	For outdoor SF6 switchgear
33kV Feeder	ACCB	7XX	33kV Feeder Panel	1	S1004	3		DI	Motor Trouble	Energised = Motor Healthy		1	5	11	R1S5DI/11	Motor Trouble	1296	DI	5	16		Y	Switchgear dependent
33kV Feeder	ACCB	7XX	33kV Feeder Panel							High = Comms Healthy						PWRelayCommsFail	37120	DI	145	0			Internal to RTU
33kV Feeder	ACCB	7XX	33kV Feeder Panel	1	S1002	1	X15:24	DI	PW Relay (P521) Watchdog	Energised = Relay Healthy		1	5	18	R1S5DI/18	PWRelayFail	1297	DI	5	17		Y	
33kV Feeder	ACCB	7XX	33kV Feeder Panel	1	S1002	3		DI	Pilot Wire Trip (mhobo4)	Energised = Fault on feeder		1	5	19	R1S5DI/19	PilotWireTrip	1298	DI	5	18	Y	Y	Not required, except for older relays.
33kV Feeder	ACCB	7XX	33kV Feeder Panel		Word 2	BIT 0	P521	Serial	Pilot Wire Trip Alarm (A-Phase)	High = PW Fault						PWTripA	37121	DI	145	1	Y		
33kV Feeder	ACCB	7XX	33kV Feeder Panel		Word 2	BIT 1	P521	Serial	Pilot Wire Trip Alarm (B-Phase)	High = PW Fault						PWTripB	37122	DI	145	2	Y		
33kV Feeder	ACCB	7XX	33kV Feeder Panel		Word 2	BIT 2	P521	Serial	Pilot Wire Trip Alarm (C-Phase)	High = PW Fault						PWTripC	37123	DI	145	3	Y		
33kV Feeder	ACCB	7XX	33kV Feeder Panel		Word 2	BIT 3	P521	Serial	Pilot Wire Trip Alarm (AB-Phase)	High = PW Fault						PWTripAB	37124	DI	145	4	Y		
33kV Feeder	ACCB	7XX	33kV Feeder Panel		Word 2	BIT 4	P521	Serial	Pilot Wire Trip Alarm (AC-Phase)	High = PW Fault						PWTripAC	37125	DI	145	5	Y		
33kV Feeder	ACCB	7XX	33kV Feeder Panel		Word 2	BIT 5	P521	Serial	Pilot Wire Trip Alarm (BC-Phase)	High = PW Fault						PWTripBC	37126	DI	145	6	Y		
33kV Feeder	ACCB	7XX	33kV Feeder Panel		Word 2	BIT 6	P521	Serial	Pilot Wire Trip Alarm (ABC-Phase)	High = PW Fault						PWTripABC	37127	DI	145	7	Y		
33kV Feeder	ACCB	7XX	33kV Feeder Panel		Word 2	BIT 7	P521	Serial	Trip Circuit 1 Supervision Alarm	High = TC1 Healthy						TripCircuitSupervision1	37128	DI	145	8			Hardwired if from dedicated TC relay
33kV Feeder	ACCB	7XX	33kV Feeder Panel		Word 2	BIT 8	P521	Serial	CB Fail Alarm (TC1 – P521)	High = CB did not trip – TC1						BreakerFailPW	37129	DI	145	9	Y		
33kV Feeder	Feeder	7XX	33kV Feeder Panel		Word 2	BIT 9	P521	Serial	Pilot Communications Failed	High = Comms Failed						PilotWireFail	37130	DI	145	10	Y		
33kV Feeder	ACCB	7XX	33kV Feeder Panel							High = Comms Healthy						OverCurrRelayCommFail	36864	DI	144	0			Internal to RTU
33kV Feeder	ACCB	7XX	33kV Feeder Panel	1	S1002	4	X15:26	DI	OC & EF Relay (P127) Watchdog	Energised = Relay Healthy		1	5	20	R1S5DI/20	OverCurrentRelay	1299	DI	5	19		Y	
33kV Feeder	ACCB	7XX	33kV Feeder Panel	1	S1002	5	X15:28	DI	DOC Trip	Energised = O/C Fault		1	5	21	R1S5DI/21	OverCurrent	1300	DI	5	20	Y	Y	Not required, except for older relays.
33kV Feeder	ACCB	7XX	33kV Feeder Panel		Word 1	BIT 0	P127	Serial	DOC Trip Alarm (A-phase)	High = O/C Fault						OverCurrentA	36865	DI	144	1	Y		Could be OverCurrent or DirOverCurr
33kV Feeder	ACCB	7XX	33kV Feeder Panel		Word 1	BIT 1	P127	Serial	DOC Trip Alarm (B-phase)	High = O/C Fault						OverCurrentB	36866	DI	144	2	Y		
33kV Feeder	ACCB	7XX	33kV Feeder Panel		Word 1	BIT 2	P127	Serial	DOC Trip Alarm (C-phase)	High = O/C Fault						OverCurrentC	36867	DI	144	3	Y		
33kV Feeder	ACCB	7XX	33kV Feeder Panel		Word 1	BIT 3	P127	Serial	DOC Trip Alarm (AB-phase)	High = O/C Fault						OverCurrentAB	36868	DI	144	4	Y		
33kV Feeder	ACCB	7XX	33kV Feeder Panel		Word 1	BIT 4	P127	Serial	DOC Trip Alarm (AC-phase)	High = O/C Fault						OverCurrentAC	36869	DI	144	5	Y		
33kV Feeder	ACCB	7XX	33kV Feeder Panel		Word 1	BIT 5	P127	Serial	DOC Trip Alarm (BC-phase)	High = O/C Fault						OverCurrentBC	36870	DI	144	6	Y		
33kV Feeder	ACCB	7XX	33kV Feeder Panel		Word 1	BIT 6	P127	Serial	DOC Trip Alarm (ABC-phase)	High = O/C Fault						OverCurrentABC	36871	DI	144	7	Y		
33kV Feeder	ACCB	7XX	33kV Feeder Panel		Word 1	BIT 7	P127	Serial	DEF Trip Alarm	High = Earth Fault						OverCurEarthLeakTrip	36872	DI	144	8	Y		
33kV Feeder	ACCB	7XX	33kV Feeder Panel		Word 1	BIT 8	P127	Serial	Trip Circuit 2 Supervision Alarm	High = TC2 Healthy						TripCircuitSupervision2	36873	DI	144	9			Hardwired if from dedicated TC relay
33kV Feeder	ACCB	7XX	33kV Feeder Panel		Word 3	BIT 9	P127	Serial	CB Fail Alarm (TC2 – P127)	High = CB did not trip – TC2						BreakerFailOC	36874	DI	144	10	Y		
33kV Feeder	ACCB	7XX	33kV Feeder Panel	1	S1005	1	Intertrip relay	DI	Aux Supply Failed (mrtp03)	Energised = Failed		1	5	22		InterTripRelayFail	1301	DI	5	21		Y	Only required for bulk supply points. From relay in pilot wire protection panel
33kV Feeder	ACCB	7XX	33kV Feeder Panel	1	S1005	2	Intertrip relay	DI	PW Intertrip Relay Failed	Energised = Failed		1	5	23		InterTripRelayFail	1302	DI	5	22		Y	Only required for bulk supply points. From relay in pilot wire protection panel
33kV Feeder	ACCB	7XX	33kV Feeder Panel	1	S1005	3	Intertrip relay	DI	Intertrip Received (srr)	Energised = Received		1	5	24		InterTripReceive	1303	DI	5	23	Y	Y	Only required for bulk supply points. From relay in pilot wire protection panel
33kV Feeder	ACCB	7XX	33kV Feeder Panel	1	S1005	4	Intertrip relay	DI	Intertrip Send	Energised = Sent		1	5	25		InterTripSend	1304	DI	5	24	Y	Y	Only required for bulk supply points. From relay in pilot wire protection panel
33kV Bus Section	ACCB	33KV 1-2 BS	33kV Bus Section Panel	1	S1006	1	X15:1		Control +ve						R1S10DO/CH4-a							Y	
33kV Bus Section	ACCB	33KV 1-2 BS	33kV Bus Section Panel	1	S1006	2	X15:3	PO	Remote Close Command			1	10	4	R1S10DO/CH4-b	Close	2563	PO	10	3		Y	
33kV Bus Section	ACCB	33KV 1-2 BS	33kV Bus Section Panel	1	S1006	3	X15:2		Control +ve						R1S10DO/CH3-a							Y	
33kV Bus Section	ACCB	33KV 1-2 BS	33kV Bus Section Panel	1	S1006	4	X15:4	PO	Remote Open Command			1	10	3	R1S10DO/CH3-b	Open	2562	PO	10	2		Y	
33kV Bus Section	ACCB	33KV 1-2 BS	33kV Bus Section Panel	1	S1007	1	X15:8	DI	ACCB Open	Energised = CB Open		1	5	26	R1S5DI/26	Status(1)	1305	DI	5	25		Y	
33kV Bus Section	ACCB	33KV 1-2 BS	33kV Bus Section Panel	1	S1007	2	X15:9	DI	ACCB Closed	Energised = CB Closed		1	5	27	R1S5DI/27	Status(0)	1306	DI	5	26		Y	
33kV Bus Section	Switch	33KV 1-2 BS ISOL	33kV Bus Section Panel	1	S1007	3	X15:10	DI	Disconnector Open	Energised = DISC Open		1	5	28	R1S5DI/28	Status(1)	1307	DI	5	27		Y	
33kV Bus Section	Switch	33KV 1-2 BS ISOL	33kV Bus Section Panel	1	S1007	4	X15:11	DI	Disconnector Closed	Energised = DISC Closed		1	5	29	R1S5DI/29	Status(0)	1308	DI	5	28		Y	
33kV Bus Section	Switch	33KV 1-2 BS EARTH	33kV Bus Section Panel	1	S1007	5	X15:12	DI	Earth Switch Open	Energised = ES Open		1	5	30	R1S5DI/30	Status(1)	1309	DI	5	29		Y	
33kV Bus Section	Switch	33KV 1-2 BS EARTH	33kV Bus Section Panel	1	S1007	6	X15:14	DI	Earth Switch Closed	Energised = ES Closed		1	5	31	R1S5DI/31	Status(0)	1310	DI	5	30		Y	
33kV Bus Section	ACCB	33KV 1-2 BS	33kV Bus Section Panel	1	S1007	7	X15:16	DI	CB Motor Spring Charged	Energised = Charged		1	5	32	R1S5DI/32	SpringCharged	1311	DI	5	31		Y	Add delay at Master Station if this comes up while charging
33kV Bus Section	ACCB	33KV 1-2 BS	33kV Bus Section Panel	1	S1020	1		DI	Low Gas	Energised = Gas Level OK		1	6	3	R1S6DI/3	Low Gas	1538	DI	6	2		Y	For outdoor SF6 switchgear
33kV Bus Section	ACCB	33KV 1-2 BS	33kV Bus Section Panel	1	S1020	2		DI	Low Gas Lockout	Energised = Locked out		1	6	4	R1S6DI/4	Low Gas L/O	1539	DI	6	3	Y	Y	For outdoor SF6 switchgear
33kV Bus Section	ACCB	33KV 1-2 BS	33kV Bus Section Panel	1	S1020	3		DI	Motor Trouble	Energised = Motor Healthy		1	6	5	R1S6DI/5	Motor Trouble	1540	DI	6	4		Y	For outdoor SF6 switchgear. Switchgear dependent
33kV Bus Section	ACCB	33KV 1-2 BS	33kV Bus Section Panel	1	S1008	9	X15:19	DI	ILIS Trip	Energised = Trip		1	6	7	R1S6DI/7	ILISTrip	1542	DI	6	6	Y	Y	
33kV Bus Section	ACCB	33KV 1-2 BS	33kV Bus Section Panel	1	S1008	10	X15:20	DI	ILIS Fault	Energised = Healthy		1	6	8	R1S6DI/8	ILISFault	1543	DI	6	7		Y	
33kV Bus Section	ACCB	33KV 1-2 BS	33kV Bus Section Panel		S1008	11		DI	Cable Diff Trip Alarm (A-Phase)	Energised = Diff Fault		1	6	9	R1S6DI/9	DifferentialTripA	1544	DI	6	8	Y	Y	Diff is usually MCAG34 relay + P127 for BSPs
33kV Bus Section	ACCB	33KV 1-2 BS	33kV Bus Section Panel		S1008	12		DI	Cable Diff Trip Alarm (B-Phase)	Energised = Diff Fault		1	6	10	R1S6DI/10	DifferentialTripB	1545	DI	6	9	Y	Y	
33kV Bus Section	ACCB	33KV 1-2 BS	33kV Bus Section Panel		S1008	13		DI	Cable Diff Trip Alarm (C-Phase)	Energised = Diff Fault		1	6	11	R1S6DI/11	DifferentialTripC	1546	DI	6	10	Y	Y	
33kV Bus Section	ACCB	33KV 1-2 BS	33kV Bus Section Panel	1	S1008	14	X15:24	DI	Cable Diff Relay (P127) Watchdog	Energised = Relay Healthy		1	6	12	R1S6DI/12	DiffRelayFail	1547	DI	6	11		Y	Required for Bus Tie CBs
33kV Bus Section	ACCB	33KV 1-2 BS	33kV Bus Section Panel							High = Comms Healthy						DiffRelayCommFail	32768	DI	128	0			Internal to RTU
33kV Bus Section	ACCB	33KV 1-2 BS	33kV Bus Section Panel		Word 4	BIT 0	P127	Serial	Cable Diff Trip Alarm	High = Diff Fault						DifferentialTrip	32769	DI	128	1	Y		
33kV Bus Section	ACCB	33KV 1-2 BS	33kV Bus Section Panel		Word 4	BIT 1	P127	Serial	Trip Circuit 1 Supervision Alarm (TC1)	High = TC1 Healthy						TripCircuitSupervision1	32770	DI	128	2			Hardwired if from dedicated TC relay
33kV Bus Section	ACCB	33KV 1-2 BS	33kV Bus Section Panel		Word 4	BIT 2	P127	Serial	CB Fail Alarm (TC1 - P127)	High = CB did not trip						DiffBreakerFail	32771	DI	128	3	Y		
33kV Bus Section	ACCB	33KV 1-2 BS	33kV Bus Section Panel	1	S1020	1		DI	Over Current Relay	High = Relay Healthy		1	6	13	R1S6DI/13	OverCurrentRelay	1548	DI	6	12		Y	OC relay may exist for outdoor CBs
33kV Bus Section	ACCB	33KV 1-2 BS	33kV Bus Section Panel							High = Comms Healthy						OverCurrRelayCommFail	33024	DI	129	0			Internal to RTU
33kV Bus Section	ACCB	33KV 1-2 BS	33kV Bus Section Panel		Word 5	BIT 0		Serial	OC Trip Alarm (A-phase)	High = O/C Fault						OverCurrentA	33025	DI	129	1	Y		OC relay may exist for outdoor CBs
33kV Bus Section	ACCB	33KV 1-2 BS	33kV Bus Section Panel		Word 5	BIT 1		Serial	OC Trip Alarm (B-phase)	High = O/C Fault						OverCurrentB	33026	DI	129	2	Y		OC relay may exist for outdoor CBs
33kV Bus Section	ACCB	33KV 1-2 BS	33kV Bus Section Panel		Word 5	BIT 2		Serial	OC Trip Alarm (C-phase)	High = O/C Fault						OverCurrentC	33027	DI	129	3	Y		OC relay may exist for outdoor CBs
33kV Bus Section	ACCB	33KV 1-2 BS	33kV Bus Section Panel		Word 5	BIT 3		Serial	OC Trip Alarm (AB-phase)	High = O/C Fault						OverCurrentAB	33028	DI	129	4	Y		OC relay may exist for outdoor CBs
33kV Bus Section	ACCB	33KV 1-2 BS	33kV Bus Section Panel		Word 5	BIT 4		Serial	OC Trip Alarm (AC-phase)	High = O/C Fault						OverCurrentAC	33029	DI	129	5	Y		OC relay may exist for outdoor CBs
33kV Bus Section	ACCB	33KV 1-2 BS	33kV Bus Section Panel		Word 5	BIT 5		Serial	OC Trip Alarm (BC-phase)	High = O/C Fault						OverCurrentBC	33030	DI	129	6	Y		OC relay may exist for outdoor CBs
33kV Bus Section	ACCB	33KV 1-2 BS	33kV Bus Section Panel		Word 5	BIT 6		Serial	OC Trip Alarm (ABC-phase)	High = O/C Fault						OverCurrentABC	33031	DI	129	7	Y		OC relay may exist for outdoor CBs
33kV Bus Section	ACCB	33KV 1-2 BS	33kV Bus Section Panel		Word 5	BIT 7		Serial	Trip Circuit 2 Supervision Alarm (TC2)	High = TC2 Healthy						TripCircuitSupervision2	33032	DI	129	8			Hardwired if from dedicated TC relay
33kV Bus Section	ACCB	33KV 1-2 BS	33kV Bus Section Panel		Word 5	BIT 8		Serial	CB Fail Alarm (TC2)	High = CB did not trip						BreakerFailOC	33033	DI	129	9	Y		OC relay may exist for outdoor CBs
Bus Zone/Section	DigitalEquip	BS1 IGIS ALARM	33kV Bus Section Panel	1	S1019	3	X15:28	DI	IGIS PRE-Warning Alarm – BUS 1 (P200)	Energised = Healthy		1	6	11	R1S6DI/11	DigStatus	1546	DI	6	10		Y	From either Bus Section or Feeder ACCB
Bus Zone/Section	DigitalEquip	BS1 IGIS WARN	33kV Bus Section Panel	1	S1019	4	X15:30	DI	IGIS Warning Alarm – BUS 1 (P200)	Energised = Healthy		1	6	12	R1S6DI/12	DigStatus	1547	DI	6	11		Y	From either Bus Section or Feeder ACCB
Bus Zone/Section	DigitalEquip	BS1 IGIS FAULT	33kV Bus Section Panel	1	S1019	5	X15:33	DI	IGIS Fault – BUS 1 (P200)	Energised = Fault		1	6	13	R1S6DI/13	DigStatus	1548	DI	6	12	Y	Y	From either Bus Section or Feeder ACCB
Bus Zone/Section	DigitalEquip	BZ1 PROT SUPPLY	33kV Bus Section Panel	1	S1019	10	X15:27	DI	Busbar Protection Supply (k10)	Energised = Supply Healthy		1	6	14	R1S6DI/14	DigStatus	1549	DI	6	13		Y	From either Bus Section or Feeder ACCB
Bus Zone/Section	DigitalEquip	NO1 33KV BS L/O	33kV Bus Section Panel	1	S1019	1	X15:26	DI	Busbar Protection MTM Trip (k86b)	Energised = Fault		1	6	15	R1S6DI/15	DigStatus	1550	DI	6	14	Y	Y	From either Bus Section or Feeder ACCB
Bus Zone/Section	ACCB	33KV 1-2 BS	33kV Bus Section Panel	1	S4017	20		DI	Cable Differential Protection MTM	Energised = CB locked out		1	6	16	R1S6DI/16	Lockout	1551	DI	6	15	Y	Y	From either Bus Section or Feeder ACCB
Rectifier ACCB			Rectifier ACCB Panel	1	S1010	1	X15:1		Control +ve						R1S10DO/CH6-a							Y	
Rectifier ACCB	ACCB	R1	Rectifier ACCB Panel	1	S1010	2	X15:23	PO	Remote Close Command			1	10	6	R1S10DO/CH6-b	Close	2565	PO	10	5		Y	
Rectifier ACCB			Rectifier ACCB Panel	1	S1010	3	X15:2		Control +ve						R1S10DO/CH5-a							Y	
Rectifier ACCB	ACCB	R1	Rectifier ACCB Panel	1	S1010	4	X15:24	PO	Remote Open Command			1	10	5	R1S10DO/CH5-b	Open	2564	PO	10	4		Y	
Rectifier ACCB	ACCB	R1	Rectifier ACCB Panel	1	S1011	1	X15:56	DI	ACCB Open	Energised = CB Open		1	6	17	R1S6DI/17	Status(1)	1552	DI	6	16		Y	
Rectifier ACCB	ACCB	R1	Rectifier ACCB Panel	1	S1011	2	X15:57	DI	ACCB Closed	Energised = CB Closed		1	6	18	R1S6DI/18	Status(0)	1553	DI	6	17		Y	
Rectifier ACCB	Switch	R1 ISOL	Rectifier ACCB Panel	1	S1011	3	X15:58	DI	Disconnector Open	Energised = DISC Open		1	6	19	R1S6DI/19	Status(1)	1554	DI	6	18		Y	
Rectifier ACCB	Switch	R1 ISOL	Rectifier ACCB Panel	1	S1011	4	X15:59	DI	Disconnector Closed	Energised = DISC Closed		1	6	20	R1S6DI/20	Status(0)	1555	DI	6	19		Y	
Rectifier ACCB	Switch	R1 EARTH	Rectifier ACCB Panel	1	S1011	5	X15:60	DI	Earth Switch Open	Energised = ES Open		1	6	21	R1S6DI/21	Status(1)	1556	DI	6	20		Y	
Rectifier ACCB	Switch	R1 EARTH	Rectifier ACCB Panel	1	S1011	6	X15:62	DI	Earth Switch Closed	Energised = ES Closed		1	6	22	R1S6DI/22	Status(0)	1557	DI	6	21		Y	
Rectifier ACCB	ACCB	R1	Rectifier ACCB Panel	1	S1011	7	X15:64	DI	CB Motor Spring Charged	Energised = Charged		1	6	24	R1S6DI/24	SpringCharged	1559	DI	6	23		Y	Add delay at Master Station if this comes up while charging

Yellow Fill = Conditional I/O

SCADA Equipment Name	SCADA Plant	SCADA Desig	From (Field Equipment Name)	Battery	Cable No	Core No	Field Device Term.	Signal Type	Signal Description	Signal Status	CT or VT Ratio	RTU Rack	RTU Slot	RTU Chan	Terminal	Master Station Mosaic Quantity (Point)	Master Station DNP Index	Master Station I/O Type	Master Station Slot	Master Station Chan	Master Station Invert	Hard wired	Comment
Rectifier ACCB	ACCB	R1	Rectifier ACCB Panel	1	S1011	8	X15:66	DI	ILIS Trip	Energised = Trip		1	6	27	R1S6DI/27	ILISTrip	1562	DI	6	26	Y	Y	
Rectifier ACCB	ACCB	R1	Rectifier ACCB Panel	1	S1011	9	X15:67	DI	ILIS Fault	Energised = Healthy		1	6	28	R1S6DI/28	ILISFault	1563	DI	6	27		Y	
Rectifier ACCB	ACCB	R1	Rectifier ACCB Panel	1	IA030	W	X3:1	AI	B Phase AC Current +ve	0-10 mA = 0 – 300A	300/1A	1	5	35	R1S5AI/CH35 +	Current	1314	AI	5	34		Y	Transducer is 1A/10mA
Rectifier ACCB	ACCB	R1	Rectifier ACCB Panel	1	IA030	B	X3:4		B Phase AC Current -ve			1	5	35	R1S5AI/CH35 -							Y	
Rectifier ACCB	ACCB	R1	Rectifier ACCB Panel	1	IA030	S			Screen													Y	
Rectifier ACCB	ACCB	R1							Sum of all Rectifier currents	0 - 300A						ACCurrentSum	34048	AI	133	0			Internal RTU calculation
Rectifier ACCB	ACCB	R1	Rectifier ACCB Panel	1	S1020	1		DI	Low Gas	Energised = Gas Level OK		1	6	29	R1S6DI/29	Low Gas	1564	DI	6	28		Y	For outdoor SF6 switchgear
Rectifier ACCB	ACCB	R1	Rectifier ACCB Panel	1	S1020	2		DI	Low Gas Lockout	Energised = Locked out		1	6	30	R1S6DI/30	Low Gas L/O	1565	DI	6	29	Y	Y	For outdoor SF6 switchgear
Rectifier ACCB	ACCB	R1	Rectifier ACCB Panel	1	S1020	3		DI	Motor Trouble	Energised = Motor Healthy		1	6	31	R1S6DI/31	Motor Trouble	1566	DI	6	30		Y	For outdoor SF6 switchgear. Switchgear dependent
Rectifier ACCB	DigitalEquip	R1 PROT AUX SUPPLY		1	S1015	6	X15:78	DI	Primary Protection (P124) Aux Supply Failed	Energised = MCB Closed		1	6	32	R1S6DI/32	DigStatus	1567	DI	6	31		Y	Required if supplied from AC Aux not if self powered
Rectifier ACCB	ACCB	R1	Rectifier ACCB Panel	1	S1012	1	X15:26	DI	OC & EF Relay (P124) Watchdog (Primary)	Energised = Relay Healthy		1	7	1	R1S7DI/1	OverCurrentRelay	1792	DI	7	0		Y	
Rectifier ACCB	ACCB	R1	Rectifier ACCB Panel							High = Comms Healthy						OverCurrRelayCommFail	34304	DI	134	0			Internal to RTU
Rectifier ACCB	ACCB	R1	Rectifier ACCB Panel		WORD-5	BIT 0	P124	Serial	Primary Prot Trip Alarm (A-Phase)	High = Fault						InstOverCurrentA	34305	DI	134	1	Y		
Rectifier ACCB	ACCB	R1	Rectifier ACCB Panel		WORD-5	BIT 1	P124	Serial	Primary Prot Trip Alarm (B-Phase)	High = Fault						InstOverCurrentB	34306	DI	134	2	Y		
Rectifier ACCB	ACCB	R1	Rectifier ACCB Panel		WORD-5	BIT 2	P124	Serial	Primary Prot Trip Alarm (C-Phase)	High = Fault						InstOverCurrentC	34307	DI	134	3	Y		
Rectifier ACCB	ACCB	R1	Rectifier ACCB Panel		WORD-5	BIT 3	P124	Serial	Primary Prot Trip Alarm (AB-Phase)	High = Fault						InstOverCurrentAB	34308	DI	134	4	Y		
Rectifier ACCB	ACCB	R1	Rectifier ACCB Panel		WORD-5	BIT 4	P124	Serial	Primary Prot Trip Alarm (AC-Phase)	High = Fault						InstOverCurrentAC	34309	DI	134	5	Y		
Rectifier ACCB	ACCB	R1	Rectifier ACCB Panel		WORD-5	BIT 5	P124	Serial	Primary Prot Trip Alarm (BC-Phase)	High = Fault						InstOverCurrentBC	34310	DI	134	6	Y		
Rectifier ACCB	ACCB	R1	Rectifier ACCB Panel		WORD-5	BIT 6	P124	Serial	Primary Prot Trip Alarm (ABC-Phase)	High = Fault						InstOverCurrentABC	34311	DI	134	7	Y		
Rectifier ACCB	ACCB	R1	Rectifier ACCB Panel		WORD-5	BIT 7	P124	Serial	Primary Prot Trip Alarm (Earth fault)	High = Fault						InstEarthLeakage	34312	DI	134	8	Y		
Rectifier ACCB	ACCB	R1	Rectifier ACCB Panel		WORD-5	BIT 8	P124	Serial	Trip Circuit 1 Supervision Alarm	High = TC1 Healthy						TripCircuitSupervision1	34313	DI	134	9			Hardwired if from dedicated TC relay
Rectifier ACCB	ACCB	R1	Rectifier ACCB Panel		WORD-5	BIT 9	P124	Serial	CB Fail Alarm (TC1 – P124)	High = CB did not trip – TC1						BreakerFailOC	34314	DI	134	10	Y		
Rectifier ACCB	ACCB	R1	Rectifier ACCB Panel	1	S1005	2	X15:26	DI	Protection Relay (P127) Watchdog (Backup)	Energised = Relay Healthy		1	7	2	R1S7DI/2	InstOverCurrentRelay	1793	DI	7	1		Y	
Rectifier ACCB	ACCB	R1	Rectifier ACCB Panel							High = Comms Healthy						OverCurrRelayCommFail	33280	DI	130	0			Internal to RTU
Rectifier ACCB	ACCB	R1	Rectifier ACCB Panel		WORD-6	BIT 0	P127	Serial	Backup Prot Trip Alarm (A-phase)	High = Fault						OverCurrentA	33281	DI	130	1	Y		
Rectifier ACCB	ACCB	R1	Rectifier ACCB Panel		WORD-6	BIT 1	P127	Serial	Backup Prot Trip Alarm (B-phase)	High = Fault						OverCurrentB	33282	DI	130	2	Y		
Rectifier ACCB	ACCB	R1	Rectifier ACCB Panel		WORD-6	BIT 2	P127	Serial	Backup Prot Trip Alarm (C-phase)	High = Fault						OverCurrentC	33283	DI	130	3	Y		
Rectifier ACCB	ACCB	R1	Rectifier ACCB Panel		WORD-6	BIT 3	P127	Serial	Backup Prot Trip Alarm (AB-phase)	High = Fault						OverCurrentAB	33284	DI	130	4	Y		
Rectifier ACCB	ACCB	R1	Rectifier ACCB Panel		WORD-6	BIT 4	P127	Serial	Backup Prot Trip Alarm (AC-phase)	High = Fault						OverCurrentAC	33285	DI	130	5	Y		
Rectifier ACCB	ACCB	R1	Rectifier ACCB Panel		WORD-6	BIT 5	P127	Serial	Backup Prot Trip Alarm (BC-phase)	High = Fault						OverCurrentBC	33286	DI	130	6	Y		
Rectifier ACCB	ACCB	R1	Rectifier ACCB Panel		WORD-6	BIT 6	P127	Serial	Backup Prot Trip Alarm (ABC-phase)	High = Fault						OverCurrentABC	33287	DI	130	7	Y		
Rectifier ACCB	ACCB	R1	Rectifier ACCB Panel		WORD-6	BIT 7	P127	Serial	Backup Prot Trip Alarm (Earth fault)	High = Fault						EarthFault	33288	DI	130	8	Y		
Rectifier ACCB	ACCB	R1	Rectifier ACCB Panel		WORD-6	BIT 8	P127	Serial	Trip Circuit 2 Supervision Alarm	High = TC2 Healthy						TripCircuitSupervision2	33289	DI	130	9			Hardwired if from dedicated TC relay
Rectifier ACCB	ACCB	R1	Rectifier ACCB Panel		WORD-6	BIT 8	P127	Serial	CB FAIL Alarm (TC2 – P127)	High = CB did not trip – TC2						BreakerFail	33290	DI	130	10	Y		
Rectifier	Rectifier	R1	Rectifier No. 1	1	IA093	W		AI	Rectifier No.1 Top (Exit) Air Temp +ve	0-20 mA = 0 – 80°c		1	6	33	R1S6AI/CH33 +	RectTopTemp	1568	AI	6	32		Y	
Rectifier	Rectifier	R1	Rectifier No. 1	1	IA093	B			Rectifier No.1 Top (Exit) Air Temp -ve						R1S6AI/CH33 -							Y	
Rectifier	Rectifier	R1	Rectifier No. 1	1	IA093	S			Screen													Y	
Rectifier	Rectifier	R1	Rectifier No. 1	1	IA092	W		AI	Rectifier No.1 Bottom (Entry) Air Temp +ve	0-20 mA = 0 – 80°c		1	6	34	R1S6AI/CH34 +	RectBottomTemp	1569	AI	6	33		Y	
Rectifier	Rectifier	R1	Rectifier No. 1	1	IA092	B			Rectifier No.1 Bottom (Entry) Air Temp -ve						R1S6AI/CH34 -							Y	
Rectifier	Rectifier	R1	Rectifier No. 1	1	IA092	S			Screen													Y	
Rectifier	Rectifier	R1	Rectifier No. 1	1	IA091	W		AI	Transformer Winding Temp +ve	0-20 mA = 0 - 150°C		1	6	35	R1S6AI/CH35 +	TXHotSpotTemp	1570	AI	6	34		Y	
Rectifier	Rectifier	R1	Rectifier No. 1	1	IA091	B			Transformer Winding Temp -ve						R1S6AI/CH35 -							Y	
Rectifier	Rectifier	R1	Rectifier No. 1	1	IA091	S			Screen													Y	
Rectifier	Rectifier	R1	Rectifier No. 1	1	IA090	W		AI	Transformer Oil Temp +ve	0-20 mA = 0 - 150°C		1	6	36	R1S6AI/CH36 +	TXTopOilTemp	1571	AI	6	35		Y	
Rectifier	Rectifier	R1	Rectifier No. 1	1	IA090	B			Transformer Oil Temp -ve						R1S6AI/CH36 -							Y	
Rectifier	Rectifier	R1	Rectifier No. 1	1	IA090	S			Screen													Y	
Rectifier	Rectifier	R1	Rectifier No. 1	1	S1015	10		DI	Rectifier Tx Frame Leakage (k64fl)	Energised = Fault		1	7	3	R1S7DI/3		1794	DI	7	2	Y	Y	Only for Rect Tx with a roof
Rectifier	Rectifier	R1	Rectifier No. 1	1	S1034	9		DI	Winding Temp Critical Alarm	Energised = Passed Critical Temp		1	7	4	R1S7DI/4	TXWdgTempCritical	1795	DI	7	3	Y	Y	
Rectifier	Rectifier	R1	Rectifier No. 1	1	S1034	10		DI	Oil Temp Critical Alarm	Energised = Passed Critical Temp		1	7	5	R1S7DI/5	TXOilTempCritical	1796	DI	7	4	Y	Y	
Rectifier	Rectifier	R1	Rectifier No. 1	1	S1034	12		DI	Winding Temp Alarm	Energised = Passed Lower Temp		1	7	7	R1S7DI/7	TXWdgTempAlarm	1798	DI	7	6	Y	Y	
Rectifier	Rectifier	R1	Rectifier No. 1	1	S1034	13		DI	Oil Temp Alarm	Energised = Passed Lower Temp		1	7	8	R1S7DI/8	TXOilTempAlarm	1799	DI	7	7	Y	Y	
Rectifier	Rectifier	R1	Rectifier No. 1	1	S1034	14		DI	Main Tank High Oil	Energised = Oil Not High Level		1	7	9	R1S7DI/9	TXMainOilHigh	1800	DI	7	8		Y	
Rectifier	Rectifier	R1	Rectifier No. 1	1	S1034	15		DI	Main Tank Low Oil	Energised = Oil Not Low Level		1	7	10	R1S7DI/10	TXMainOilLow	1801	DI	7	9		Y	
Rectifier	Rectifier	R1	Rectifier No. 1							High = Comms Healthy						PLCCommsFail	38144	DI	149	0			Internal to RTU
Rectifier	Rectifier	R1	Rectifier No. 1	1	S1015	7	X15:73	DI	PLC Fault (K97)	Energised = Fault		1	7	11	R1S7DI/11	PLCFault	1802	DI	7	10		Y	
Rectifier	Rectifier	R1	Rectifier No. 1		Modbus 10	BIT 0	PLC	Serial	Buchholz Oil Trip	High = Buchholz Oil Fault						BuchholzOil	38145	DI	149	1	Y		For oil filled transformers
Rectifier	Rectifier	R1	Rectifier No. 2		Word 7	BIT 1	PLC	Serial	Buchholz Gas Trip	High = Buchhoz Gas Fault						BuchholzGas	38146	DI	149	2	Y		For oil filled transformers
Rectifier	Rectifier	R1	Rectifier No. 1		Word 7	BIT 2	PLC	Serial	Rectifier Tx Over Pressure	High = Over Pressure Fault						Pressure	38147	DI	149	3	Y		
Rectifier	Rectifier	R1	Rectifier No. 1		Word 7	BIT 3	PLC	Serial	DC Reverse Current	High = Rev Curr Fault						ReverseCurrent	38148	DI	149	4	Y		
Rectifier	Rectifier	R1	Rectifier No. 1		Word 7	BIT 4	PLC	Serial	Rectifier frame leakage	High = Frame Leak Fault						FrameLeakage	38149	DI	149	5	Y		
Rectifier	Rectifier	R1	Rectifier No. 1		Word 7	BIT 5	PLC	Serial	Rectifier MTM Lockout (k86r)	High = CB locked out						Lockout	38150	DI	149	6			
Rectifier	Switch	R1 NEG ISOL	Rectifier No. 1		Word 7	BIT 6	PLC	Serial	Negative Isolator Closed	High = Neg Isol Closed						Status(0)	38151	DI	149	7			
Rectifier	Rectifier	R1	Rectifier No. 1		IA040	1W	X3:7	AI	DC Circuit Current +ve	0-20 mA = 0 – 13000A		1	7	33	R1S7AI/CH33 +	DCCurrent	1824	AI	7	32		Y	
Rectifier	Rectifier	R1	Rectifier No. 1		IA040	1B	X3:8		DC Circuit Current -ve			1	7	33	R1S7AI/CH33 -							Y	
Rectifier	Rectifier	R1	Rectifier No. 1		IA040	S			Screen													Y	
Rectifier	Rectifier	R1	Rectifier No. 1		IA050	1W	X3:11	AI	DC Voltage +ve	0-20 mA = 0 – 2200v		1	7	34	R1S7AI/CH34 +	DCVoltage	1825	AI	7	33		Y	
Rectifier	Rectifier	R1	Rectifier No. 1		IA050	1B	X3:12		DC Voltage -ve			1	7	34	R1S7AI/CH34 -							Y	
Rectifier	Rectifier	R1	Rectifier No. 1		IA050	S			Screen													Y	
Rectifier Tx Tap Changer	AnalogEquip	R1 TC POSITION														AnaStatus	16896	AI	66	0			Internal to RTU. Analogue representing Tap position
Rectifier Tx Tap Changer				1	S1008	1			Control +ve						R1S10DO/CH7-a							Y	
Rectifier Tx Tap Changer	Switch	R1		1	S1008	2		PO	Remote Raise Command			1	10	7	R1S10DO/CH7-b	Raise	2566	PO	10	6		Y	
Rectifier Tx Tap Changer	Switch	R1		1	S1008	3		PO	Remote Lower Command			1	10	8	R1S10DO/CH7-b	Lower	2567	PO	10	7		Y	
Rectifier Tx Tap Changer	Rectifier	R1		1	S1034	16		DI	MCB Tripped Alarm (Circuit Fail)	Energised = MCB Closed		1	7	12	R1S7DI/12	TapChangerSupply	1803	DI	7	11		Y	
Rectifier Tx Tap Changer	Rectifier	R1		1	S1034	1		DI	Tap Changer No.1 Motor O/L Trip	Energised = Tripped		1	7	13	R1S7DI/13	TapChangerOverload	1804	DI	7	12	Y	Y	
Rectifier Tx Tap Changer	DigitalEquip	R1 TC POS1		1	S1034	2		DI	Tap Changer No.1 Tap 1	Energised = On Tap 1		1	7	14	R1S7DI/14	DigStatus	1805	DI	7	13		Y	
Rectifier Tx Tap Changer	DigitalEquip	R1 TC POS2		1	S1034	3		DI	Tap Changer No.1 Tap 2	Energised = On Tap 2		1	7	15	R1S7DI/15	DigStatus	1806	DI	7	14		Y	
Rectifier Tx Tap Changer	DigitalEquip	R1 TC POS3		1	S1034	4		DI	Tap Changer No.1 Tap 3	Energised = On Tap 3		1	7	16	R1S7DI/16	DigStatus	1807	DI	7	15		Y	
Rectifier Tx Tap Changer	DigitalEquip	R1 TC POS4		1	S1034	5		DI	Tap Changer No.1 Tap 4	Energised = On Tap 4		1	7	17	R1S7DI/17	DigStatus	1808	DI	7	16		Y	
Rectifier Tx Tap Changer	DigitalEquip	R1 TC POS5		1	S1034	6		DI	Tap Changer No.1 Tap 5	Energised = On Tap 5		1	7	18	R1S7DI/18	DigStatus	1809	DI	7	17		Y	
Rectifier Tx Tap Changer	DigitalEquip	R1 TC POS6		1	S1034	7		DI	Tap Changer No.1 Tap 6	Energised = On Tap 6		1	7	19	R1S7DI/19	DigStatus	1810	DI	7	18		Y	
Rectifier Tx Tap Changer	DigitalEquip	R1 TC POS7		1	S1034	8		DI	Tap Changer No.1 Tap 7	Energised = On Tap 7		1	7	20	R1S7DI/20	DigStatus	1811	DI	7	19		Y	
Rectifier DCCB	RDCCB	R1	Rectifier	1	S1015	8	x15:76	DI	DCCB Open	Energised = CB Open		1	7	21	R1S7DI/21	Status(1)	1812	DI	7	20		Y	
Rectifier DCCB	RDCCB	R1	Rectifier	1	S1015	9	x15:75	DI	DCCB Closed	Energised = CB Closed		1	7	22	R1S7DI/22	Status(0)	1813	DI	7	21		Y	
DC General			Common Equipment Panel	2	S1108	1		+ve	125V dc common														
DC General	DigitalEquip	DC FRAME LEAKAGE	Common Equipment Panel	2	S1108	2		DI	1500V DC Switchboard Frame Leakage Trip	Energised = F/L occurred		2	3	1	R2S3DI/1	DigStatus	3840	DI	15	0	Y	Y	
DC General	DigitalEquip	FRAME LEAKAGE FAULT	Common Equipment Panel	2	S1108	3		DI	Frame Leakage Relay Failed	Energised = Healthy		2	3	2	R2S3DI/2	DigStatus	3841	DI	15	1		Y	
DC General	DigitalEquip	FRAME LEAKAGE SUPPLY	Common Equipment Panel	2	S1108	4		DI	Frame Leakage Protection Supply Healthy	Energised = Volts Present		2	3	3	R2S3DI/3	DigStatus	3842	DI	15	2		Y	
DC General			Common Equipment Panel						Frame Leakage Bypass													Y	
33/11 33kV ACCB			33kV Panel 3 33/11 Tx	1	S1005	1	X15:01		Control +ve						R1S11DO/CH2-a							Y	
33/11 33kV ACCB	ACCB	NO1 33/11 33KV	33kV Panel 3 33/11 Tx	1	S1005	2	X15:03	PO	Remote Close Command			1	11	2	R1S11DO/CH2-b	Close	2817	PO	11	1		Y	
33/11 33kV ACCB			33kV Panel 3 33/11 Tx	1	S1005	3	X15:02		Control +ve						R1S11DO/CH2-a							Y	
33/11 33kV ACCB	ACCB	NO1 33/11 33KV	33kV Panel 3 33/11 Tx	1	S1005	4	X15:04	PO	Remote Open Command			1	11	1	R1S11DO/CH2-b	Open	2816	PO	11	0		Y	
33/11 33kV ACCB	ACCB	NO1 33/11 33KV	33kV Panel 3 33/11 Tx	1	S1040	1	X15:8	DI	ACCB Open	Energised = CB Open		1	7	23	R1S7DI/23	Status(1)	1814	DI	7	22		Y	
33/11 33kV ACCB	ACCB	NO1 33/11 33KV	33kV Panel 3 33/11 Tx	1	S1040	2	X15:9	DI	ACCB Closed	Energised = CB Closed		1	7	24	R1S7DI/24	Status(0)	1815	DI	7	23		Y	
33/11 33kV ACCB	Switch	33/11 33KV ISOL	33kV Panel 3 33/11 Tx	1	S1040	3	X15:10	DI	Disconnector Open	Energised = DISC Open		1	7	25	R1S7DI/25	Status(1)	1816	DI	7	24		Y	
33/11 33kV ACCB	Switch	33/11 33KV ISOL	33kV Panel 3 33/11 Tx	1	S1040	4	X15:11	DI	Disconnector Closed	Energised = DISC Closed		1	7	26	R1S7DI/26	Status(0)	1817	DI	7	25		Y	
33/11 33kV ACCB	Switch	33/11 33KV EARTH	33kV Panel 3 33/11 Tx	1	S1040	5	X15:12	DI	Earth Switch Open	Energised = ES Open		1	7	27	R1S7DI/27	Status(1)	1818	DI	7	26		Y	
33/11 33kV ACCB	Switch	33/11 33KV EARTH	33kV Panel 3 33/11 Tx	1	S1040	6	X15:14	DI	Earth Switch Closed	Energised = ES Closed		1	7	28	R1S7DI/28	Status(0)	1819	DI	7	27		Y	
33/11 33kV ACCB	ACCB	NO1 33/11 33KV	33kV Panel 3 33/11 Tx	1	S1040	7	X15:16	DI	CB Motor Spring Charged	Energised = Charged		1	7	29	R1S7DI/29	SpringCharged	1820	DI	7	28		Y	
33/11 33kV ACCB	ACCB	NO1 33/11 33KV	33kV Panel 3 33/11 Tx	1	S1040	9	X15:19	DI	ILIS Trip	Energised = Trip		1	7	30	R1S7DI/30	ILISTrip	1821	DI	7	29	Y	Y	
33/11 33kV ACCB	ACCB	NO1 33/11 33KV	33kV Panel 3 33/11 Tx	1	S1040	8	X15:20	DI	ILIS Fault	Energised = Healthy		1	7	31	R1S7DI/31	ILISFault	1822	DI	7	30		Y	
33/11 33kV ACCB	ACCB	NO1 33/11 33KV	33kV Panel 3 33/11 Tx		IA020	W	X3:1	AI	B Phase AC Current +ve	0-10 mA = 0 – 200 A	200/1A	1	7	35	R1S7AI/CH35+	Current	1826	AI	7	34		Y	Transducer is 1A/10mA
33/11 33kV ACCB	ACCB	NO1 33/11 33KV	33kV Panel 3 33/11 Tx		IA020	B	X3:4		B Phase AC Current -ve			1	7	35	R1S7AI/CH35-							Y	
33/11 33kV ACCB	ACCB	NO1 33/11 33KV	33kV Panel 3 33/11 Tx		IA020	S			Screen													Y	

Uncontrolled when printed. Refer to electronic document for most recent version.

Yellow Fill = Conditional I/O

SCADA Equipment Name	SCADA Plant	SCADA Desig	From (Field Equipment Name)	Battery	Cable No	Core No	Field Device Term.	Signal Type	Signal Description	Signal Status	CT or VT Ratio	RTU Rack	RTU Slot	RTU Chan	Terminal	Master Station Mosaic Quantity (Point)	Master Station DNP Index	Master Station I/O Type	Master Station Slot	Master Station Chan	Master Station Invert	Hard wired	Comment
33/11 33kV ACCB	ACCB	NO1 33/11 33KV	33kV Panel 3 33/11 Tx							High = Comms Healthy						DiffRelayCommsFail	37632	DI	147	0			Internal to RTU
33/11 33kV ACCB	ACCB	NO1 33/11 33KV	33kV Panel 3 33/11 Tx	1	S1041	1	X15:25	DI	Diff Relay (P632) Watchdog	Energised = Relay Healthy		1	8	1	R1S8DI/1	DiffRelayFail	2048	DI	8	0			
33/11 33kV ACCB	ACCB	NO1 33/11 33KV	33kV Panel 3 33/11 Tx		WORD-14	BIT 0	P632	Serial	Tx Diff Trip Alarm	High = Fault						DifferentialProtection	37633	DI	147	1	Y		
33/11 33kV ACCB	ACCB	NO1 33/11 33KV	33kV Panel 3 33/11 Tx		WORD-14	BIT 1	P632	Serial	Trip Circuit 1 Supervision Alarm	High = TC1 Healthy						TripCircuitSupervision1	37634	DI	147	2			Hardwired if from dedicated TC relay.
33/11 33kV ACCB	ACCB	NO1 33/11 33KV	33kV Panel 3 33/11 Tx		WORD-14	BIT 2	P632	Serial	CB FAIL Alarm (TC1 – P632)	High = CB did not trip – TC1						DiffBreakerFail	37635	DI	147	3	Y		
33/11 33kV ACCB	ACCB	NO1 33/11 33KV	33kV Panel 3 33/11 Tx		WORD-14	BIT 3	P632	Serial	Tap Changer Oil Pressure Switch	High = Pressure Activated						TCPressure	37639	DI	147	7	Y		
33/11 33kV ACCB	ACCB	NO1 33/11 33KV	33kV Panel 3 33/11 Tx		WORD-14	BIT 4	P632	Serial	Tap Changer Alarm	High = TC Fault						TCFail	37640	DI	147	8			
33/11 33kV ACCB	ACCB	NO1 33/11 33KV	33kV Panel 3 33/11 Tx							High = Comms Healthy						OverCurrRelayCommFail	37376	DI	146	0			Internal to RTU
33/11 33kV ACCB	ACCB	NO1 33/11 33KV	33kV Panel 3 33/11 Tx	1	S1024	1	X15:32	DI	OC Relay (P127) Watchdog	Energised = Relay Healthy		1	8	2	R1S8DI/2	OverCurrentRelay	2049	DI	8	1		Y	
33/11 33kV ACCB	ACCB	NO1 33/11 33KV	33kV Panel 3 33/11 Tx		Word 8	BIT 0	P127	Serial	OC Trip Alarm (A-phase)	High = O/C Fault						OverCurrentA	37377	DI	146	1	Y		
33/11 33kV ACCB	ACCB	NO1 33/11 33KV	33kV Panel 3 33/11 Tx		Word 8	BIT 1	P127	Serial	OC Trip Alarm (B-phase)	High = O/C Fault						OverCurrentB	37378	DI	146	2	Y		
33/11 33kV ACCB	ACCB	NO1 33/11 33KV	33kV Panel 3 33/11 Tx		Word 8	BIT 2	P127	Serial	OC Trip Alarm (C-phase)	High = O/C Fault						OverCurrentC	37379	DI	146	3	Y		
33/11 33kV ACCB	ACCB	NO1 33/11 33KV	33kV Panel 3 33/11 Tx		Word 8	BIT 3	P127	Serial	OC Trip Alarm (AB-phase)	High = O/C Fault						OverCurrentAB	37380	DI	146	4	Y		
33/11 33kV ACCB	ACCB	NO1 33/11 33KV	33kV Panel 3 33/11 Tx		Word 8	BIT 4	P127	Serial	OC Trip Alarm (AC-phase)	High = O/C Fault						OverCurrentAC	37381	DI	146	5	Y		
33/11 33kV ACCB	ACCB	NO1 33/11 33KV	33kV Panel 3 33/11 Tx		Word 8	BIT 5	P127	Serial	OC Trip Alarm (BC-phase)	High = O/C Fault						OverCurrentBC	37382	DI	146	6	Y		
33/11 33kV ACCB	ACCB	NO1 33/11 33KV	33kV Panel 3 33/11 Tx		Word 8	BIT 6	P127	Serial	OC Trip Alarm (ABC-phase)	High = O/C Fault						OverCurrentABC	37383	DI	146	7	Y		
33/11 33kV ACCB	ACCB	NO1 33/11 33KV	33kV Panel 3 33/11 Tx		Word 8	BIT 7	P127	Serial	Earth Fault Trip Alarm	High = Earth Fault						EarthFault	37384	DI	146	8	Y		
33/11 33kV ACCB	ACCB	NO1 33/11 33KV	33kV Panel 3 33/11 Tx		Word 8	BIT 8	P127	Serial	Trip Circuit 2 Supervision Alarm	High = TC2 Healthy						TripCircuitSupervision2	37385	DI	146	9			Hardwired if from dedicated TC relay.
33/11 33kV ACCB	ACCB	NO1 33/11 33KV	33kV Panel 3 33/11 Tx		Word 8	BIT 9	P127	Serial	CB Fail Alarm (TC2 – P127)	High = CB did not trip – TC2						BreakerFailOC	37386	DI	146	10	Y		
33 or 66/11 Tx	Transformer	NO1 33/11KV TX	33/11kV Tx	1	IA110	W		AI	Transformer Winding Temp +ve	0-20 mA = 0 - 150°C		1	8	33	R1S8AI/CH33 +	TXHotSpotTemp	2080	AI	8	32		Y	
33 or 66/11 Tx	Transformer	NO1 33/11KV TX	33/11kV Tx	1	IA110	B			Transformer Winding Temp -ve						R1S8AI/CH33 -							Y	
33 or 66/11 Tx	Transformer	NO1 33/11KV TX	33/11kV Tx	1	IA110	S			Screen													Y	
33 or 66/11 Tx	Transformer	NO1 33/11KV TX	33/11kV Tx	1	IA111	W		AI	Transformer Oil Temp +ve	0-20 mA = 0 - 150°C		1	8	34	R1S8AI/CH34 +	TXTopOilTemp	2081	AI	8	33		Y	
33 or 66/11 Tx	Transformer	NO1 33/11KV TX	33/11kV Tx	1	IA111	B			Transformer Oil Temp -ve						R1S8AI/CH34 -							Y	
33 or 66/11 Tx	Transformer	NO1 33/11KV TX	33/11kV Tx	1	IA111	S			Screen													Y	
33 or 66/11 Tx	Transformer	NO1 33/11KV 11kV	33/11kV Tx		IA012	W	X3:6	AI	11kV Voltage (A-C Phase) +ve	0-20 mA = 0 – 12.5 kV	11kV/110V	1	8	35	R1S8AI/CH35 +	Voltage	2082	AI	8	34		Y	Transducer is 125V/20mA
33 or 66/11 Tx			33/11kV Tx		IA012	B	X3:7		11kV Voltage (A-C Phase) -ve			1	8	35	R1S8AI/CH35 -							Y	
33 or 66/11 Tx			33/11kV Tx		IA012	S	X3:8		Screen													Y	
33 or 66/11 Tx	Transformer	NO1 33/11KV TX	33/11kV Tx	1	S1035	1		DI	Winding Temp Critical Alarm	Energised = Passed Critical Temp		1	8	3	R1S8DI/3	TXWdgTempCritical	2050	DI	8	2	Y	Y	
33 or 66/11 Tx	Transformer	NO1 33/11KV TX	33/11kV Tx	1	S1035	2		DI	Oil Temp Critical Alarm	Energised = Passed Critical Temp		1	8	4	R1S8DI/4	TXOilTempCritical	2051	DI	8	3	Y	Y	
33 or 66/11 Tx	Transformer	NO1 33/11KV TX	33/11kV Tx	1	S1035	3		DI	Pressure	Energised = Over Pressure Fault		1	8	5	R1S8DI/5	Pressure	2052	DI	8	4	Y	Y	
33 or 66/11 Tx	Transformer	NO1 33/11KV TX	33/11kV Tx	1	S1035	4		DI	Winding Temp Alarm	Energised = Passed Lower Temp		1	8	6	R1S8DI/6	TXWdgTempAlarm	2053	DI	8	5	Y	Y	
33 or 66/11 Tx	Transformer	NO1 33/11KV TX	33/11kV Tx	1	S1035	5		DI	Oil Temp Alarm	Energised = Passed Lower Temp		1	8	7	R1S8DI/7	TXOilTempAlarm	2054	DI	8	6	Y	Y	
33 or 66/11 Tx	Transformer	NO1 33/11KV TX	33/11kV Tx	1	S1035	6		DI	Main Tank High Oil	Energised = Oil Not High Level		1	8	8	R1S8DI/8	TXMainOilHigh	2055	DI	8	7		Y	
33 or 66/11 Tx	Transformer	NO1 33/11KV TX	33/11kV Tx	1	S1035	7		DI	Main Tank Low Oil	Energised = Oil Not Low Level		1	8	9	R1S8DI/9	TXMainOilLow	2056	DI	8	8		Y	
34 or 66/11 Tx	Transformer	NO1 33/11KV TX	33/11kV Tx		S1035	8		DI	Buchholz Oil Trip	Energised = Buchholz Oil Fault		1	8	10	R1S8DI/10	BuchholzOil	2057	DI	8	9	Y	Y	For oil filled transformers
35 or 66/11 Tx	Transformer	NO1 33/11KV TX	33/11kV Tx		S1035	9		DI	Buchholz Gas Trip	Energised = Buchholz Gas Fault		1	8	11	R1S8DI/11	BuchholzGas	2058	DI	8	10	Y	Y	For oil filled transformers
33 or 66/11 Tx	Transformer	NO1 33/11KV TX	33/11kV Tx	1	S1035	10	X15:34	DI	MTM Relay Lockout (k86t)	Energised = Locked out		1	8	12	R1S8DI/12	Lockout	2059	DI	8	11	Y	Y	
33 or 66/11 Tx	Transformer	NO1 33/11KV TX	33/11kV Tx	1	S1035	11		DI	Fan Motor Running	Energised = Fan Running		1	8	13	R1S8DI/13	FanRunning	2060	DI	8	12		Y	Required for Tx's with fans
33 or 66/11 Tx	Transformer	NO1 33/11KV TX	33/11kV Tx	1	S1035	12		DI	Fan Motor Fault	Energised = Fan Fault		1	8	14	R1S8DI/14	FanFail	2061	DI	8	13		Y	Required for Tx's with fans
33 or 66/11 Tx Tap changer	Transformer	NO1 33/11KV TX	Onload Tap Changer	1	S1030	1		DI	Tap Changer Faulty	Energised = Fault		1	8	15	R1S8DI/15	TCFail	6926	DI	8	14	Y	Y	
33 or 66/11 Tx Tap changer	Transformer	NO1 33/11KV TX	Onload Tap Changer	1	S1030	2		DI	Tap Changer Limit	Energised = Within Limits		1	8	16	R1S8DI/16	TCLimit	6927	DI	8	15		Y	
33 or 66/11 Tx Tap changer	Transformer	NO1 33/11KV TX	Onload Tap Changer	1	S1030	3		DI	Tap Changer Winding Temp Alarm	Energised = Passed alarm temp		1	8	17	R1S8DI/17	TCWdgTemp	6928	DI	8	16	Y	Y	Trip Temp Exceeded - Via ACCB
33 or 66/11 Tx Tap changer	Transformer	NO1 33/11KV TX	Onload Tap Changer	1	S1030	4		DI	Tap Changer Oil Temp Alarm	Energised = Passed alarm temp		1	8	18	R1S8DI/18	TCOilTemp	6929	DI	8	17	Y	Y	Trip Temp Exceeded - Via ACCB
33 or 66/11 Tx Tap changer	Transformer	NO1 33/11KV TX	Onload Tap Changer	1	S1030	5		DI	Motor Protection CB Trip Alarm	Energised = Closed (No Fault)		1	8	19	R1S8DI/19	TCMotorCB	6930	DI	8	18		Y	
33 or 66/11 Tx Tap changer	Transformer	NO1 33/11KV TX	Onload Tap Changer	1	S1030	6		DI	Buchholz Oil Trip	Energised = Buchholz Oil Fault		1	8	20	R1S8DI/20	TCBuchholzOil	37639	DI	8	19	Y	Y	
33 or 66/11 Tx Tap changer	DigitalEquip	NO1 33/11 Tx TC Pos1	Onload Tap Changer	1	S1031	1		DI	Tap Changer Position Tap 1	Energised = On Tap 1		2	4	1	R2S4DI/1	DigStatus	4096	DI	16	0		Y	
33 or 66/11 Tx Tap changer	DigitalEquip	NO1 33/11 Tx TC Pos2	Onload Tap Changer	1	S1031	2		DI	Tap Changer Position Tap 2	Energised = On Tap 2		2	4	2	R2S4DI/2	DigStatus	4097	DI	16	1		Y	
33 or 66/11 Tx Tap changer	DigitalEquip	NO1 33/11 Tx TC Pos3	Onload Tap Changer	1	S1031	3		DI	Tap Changer Position Tap 3	Energised = On Tap 3		2	4	3	R2S4DI/3	DigStatus	4098	DI	16	2		Y	
33 or 66/11 Tx Tap changer	DigitalEquip	NO1 33/11 Tx TC Pos4	Onload Tap Changer	1	S1031	4		DI	Tap Changer Position Tap 4	Energised = On Tap 4		2	4	4	R2S4DI/4	DigStatus	4099	DI	16	3		Y	
33 or 66/11 Tx Tap changer	DigitalEquip	NO1 33/11 Tx TC Pos5	Onload Tap Changer	1	S1031	5		DI	Tap Changer Position Tap 5	Energised = On Tap 5		2	4	5	R2S4DI/5	DigStatus	4100	DI	16	4		Y	
33 or 66/11 Tx Tap changer	DigitalEquip	NO1 33/11 Tx TC Pos6	Onload Tap Changer	1	S1031	6		DI	Tap Changer Position Tap 6	Energised = On Tap 6		2	4	6	R2S4DI/6	DigStatus	4101	DI	16	5		Y	
33 or 66/11 Tx Tap changer	DigitalEquip	NO1 33/11 Tx TC Pos7	Onload Tap Changer	1	S1031	7		DI	Tap Changer Position Tap 7	Energised = On Tap 7		2	4	7	R2S4DI/7	DigStatus	4102	DI	16	6		Y	
33 or 66/11 Tx Tap changer	DigitalEquip	NO1 33/11 Tx TC Pos8	Onload Tap Changer	1	S1031	8		DI	Tap Changer Position Tap 8	Energised = On Tap 8		2	4	8	R2S4DI/8	DigStatus	4103	DI	16	7		Y	
33 or 66/11 Tx Tap changer	DigitalEquip	NO1 33/11 Tx TC Pos9	Onload Tap Changer	1	S1031	9		DI	Tap Changer Position Tap 9	Energised = On Tap 9		2	4	9	R2S4DI/9	DigStatus	4104	DI	16	8		Y	
33 or 66/11 Tx Tap changer	DigitalEquip	NO1 33/11 Tx TC Pos10	Onload Tap Changer	1	S1031	10		DI	Tap Changer Position Tap 10	Energised = On Tap 10		2	4	10	R2S4DI/10	DigStatus	4105	DI	16	9		Y	
33 or 66/11 Tx Tap changer	DigitalEquip	NO1 33/11 Tx TC Pos11	Onload Tap Changer	1	S1032	1		DI	Tap Changer Position Tap 11	Energised = On Tap 11		2	4	11	R2S4DI/11	DigStatus	4106	DI	16	10		Y	
33 or 66/11 Tx Tap changer	DigitalEquip	NO1 33/11 Tx TC Pos12	Onload Tap Changer	1	S1032	2		DI	Tap Changer Position Tap 12	Energised = On Tap 12		2	4	12	R2S4DI/12	DigStatus	4107	DI	16	11		Y	
33 or 66/11 Tx Tap changer	DigitalEquip	NO1 33/11 Tx TC Pos13	Onload Tap Changer	1	S1032	3		DI	Tap Changer Position Tap 13	Energised = On Tap 13		2	4	13	R2S4DI/13	DigStatus	4108	DI	16	12		Y	
33 or 66/11 Tx Tap changer	DigitalEquip	NO1 33/11 Tx TC Pos14	Onload Tap Changer	1	S1032	4		DI	Tap Changer Position Tap 14	Energised = On Tap 14		2	4	14	R2S4DI/14	DigStatus	4109	DI	16	13		Y	
33 or 66/11 Tx Tap changer	DigitalEquip	NO1 33/11 Tx TC Pos15	Onload Tap Changer	1	S1032	5		DI	Tap Changer Position Tap 15	Energised = On Tap 15		2	4	15	R2S4DI/15	DigStatus	4110	DI	16	14		Y	
33 or 66/11 Tx Tap changer	DigitalEquip	NO1 33/11 Tx TC Pos16	Onload Tap Changer	1	S1032	6		DI	Tap Changer Position Tap 16	Energised = On Tap 16		2	4	16	R2S4DI/16	DigStatus	4111	DI	16	15		Y	
33 or 66/11 Tx Tap changer	DigitalEquip	NO1 33/11 Tx TC Pos17	Onload Tap Changer	1	S1032	7		DI	Tap Changer Position Tap 17	Energised = On Tap 17		2	4	17	R2S4DI/17	DigStatus	4112	DI	16	16		Y	
33 or 66/11 Tx Tap changer	DigitalEquip	NO1 33/11 Tx TC Pos18	Onload Tap Changer	1	S1032	8		DI	Tap Changer Position Tap 18	Energised = On Tap 18		2	4	18	R2S4DI/18	DigStatus	4113	DI	16	17		Y	
33 or 66/11 Tx Tap changer	DigitalEquip	NO1 33/11 Tx TC Pos19	Onload Tap Changer	1	S1032	9		DI	Tap Changer Position Tap 19	Energised = On Tap 19		2	4	19	R2S4DI/19	DigStatus	4114	DI	16	18		Y	
VT (110V)			33kV Feeder Panel	1	S1063	1		+VE	125V dc common													Y	The VT may be in the feeder panel, but the master station associates it with the bus section.
VT (110V)	VT	NO1 33KV	33kV Feeder Panel	1	S1063	3	X15:29	DI	Phase Failure (K47)	Energised = Healthy		1	8	17	R1S8DI/17	PhaseFailure	2064	DI	8	16		Y	VT may be in feeder panel, but the master station associates it with the bus section.
VT (110V)	VT	NO1 33KV	33kV Feeder Panel		IA010	W	X3:6	AI	Busbar Voltage (A-C Phase) +ve	0-20 mA = 0 – 37.5 kV	33kV/110V	1	8	35	R1S8AI/CH35 +	Voltage	2082	AI	8	34		Y	Transducer is 125V/20mA
VT (110V)			33kV Feeder Panel		IA010	B	X3:7		Busbar Voltage (A-C Phase) -ve			1	8	35	R1S8AI/CH35 -							Y	
VT (110V)			33kV Feeder Panel		IA010	S	X3:8		Screen													Y	
11kV Feeder			11kV Feeder Panel	1	S1050	1	X15:01		Control +ve						R1S11DO/CH6-a							Y	
11kV Feeder	ACCB	6XX	11kV Feeder Panel	1	S1050	2	X15:03	PO	Remote Close Command			1	11	6	R1S11DO/CH6-b	Close	2821	PO	11	5		Y	
11kV Feeder			11kV Feeder Panel	1	S1050	3	X15:02		Control +ve						R1S11DO/CH5-a							Y	
11kV Feeder	ACCB	6XX	11kV Feeder Panel	1	S1050	4	X15:04	PO	Remote Open Command			1	11	5	R1S11DO/CH5-b	Open	2820	PO	11	4		Y	
11kV Feeder	ACCB	6XX	11kV Feeder Panel	1	S1061	1	X15:08	DI	ACCB Open	Energised = CB Open		1	8	18	R1S8DI/18	Status(1)	2065	DI	8	17		Y	
11kV Feeder	ACCB	6XX	11kV Feeder Panel	1	S1061	2	X15:09	DI	ACCB Closed	Energised = CB Closed		1	8	19	R1S8DI/19	Status(0)	2066	DI	8	18		Y	
11kV Feeder	Switch	6XX ISOL	11kV Feeder Panel	1	S1061	3	X15:10	DI	Disconnector Open	Energised = DISC Open		1	8	20	R1S8DI/20	Status(1)	2067	DI	8	19		Y	
11kV Feeder	Switch	6XX ISOL	11kV Feeder Panel	1	S1061	4	X15:11	DI	Disconnector Closed	Energised = DISC Closed		1	8	21	R1S8DI/21	Status(0)	2068	DI	8	20		Y	
11kV Feeder	Switch	6XX EARTH	11kV Feeder Panel	1	S1061	5	X15:12	DI	Earth Switch Open	Energised = ES Open		1	8	22	R1S8DI/22	Status(1)	2069	DI	8	21		Y	
11kV Feeder	Switch	6XX EARTH	11kV Feeder Panel	1	S1061	6	X15:13	DI	Earth Switch Closed	Energised = ES Closed		1	8	23	R1S8DI/23	Status(0)	2070	DI	8	22		Y	
11kV Feeder	ACCB	6XX	11kV Feeder Panel	1	S1061	7	X15:14	DI	CB Motor Spring Charged	Energised = Charged		1	8	24	R1S8DI/24	SpringCharged	2071	DI	8	23		Y	Add delay at Master Station if this comes up while charging
11kV Feeder	ACCB	6XX	11kV Feeder Panel		IA070	W	X3:1	AI	B Phase AC Current +ve	0-10 mA = 0 - 300 A	300/1A	1	8	36	R1S8AI/CH36+	Current	2083	AI	8	35		Y	Transducer is 1A/10mA
11kV Feeder	ACCB	6XX	11kV Feeder Panel		IA070	B	X3:4		B Phase AC Current -ve			1	8	36	R1S8AI/CH36-							Y	
11kV Feeder	ACCB	6XX	11kV Feeder Panel		IA070	S			Screen													Y	
11kV Feeder	ACCB	6XX	11kV Feeder Panel	1	S1070	1		DI	Low Gas Alarm	Energised =		1	8	25	R1S8DI/25	LowGas	2072	DI	8	24		Y	Required for gas CBs
11kV Feeder	ACCB	6XX	11kV Feeder Panel	1	S1070	2		DI	Low Gas Lockout	Energised =		1	8	26	R1S8DI/26	LowGasLockout	2073	DI	8	25	Y	Y	Required for gas CBs
11kV Feeder	ACCB	6XX	11kV Feeder Panel	1	S1070	3		DI	Motor Fault	Energised = Motor Healthy		1	8	27	R1S8DI/27	MotorTrouble	2074	DI	8	26		Y	Required for gas CBs
11kV Feeder	ACCB	6XX	11kV Feeder Panel	1	S1070	4		DI	Motor Protection CB Trip Alarm	Energised =		1	8	28	R1S8DI/28	MotorSupply	2075	DI	8	27		Y	Required for gas CBs
11kV Feeder	Switch	6XX EARTH	11kV Feeder Panel	1	S1061	11	X15:18	DI	Disconnector Earthed	Energised = Disc Earthed		1	8	29	R1S8DI/29	Status (2)	2076	DI	8	28		Y	Only required for 3 position switches
11kV Feeder	ACCB	6XX	11kV Feeder Panel	1	S1061	8	X15:15	DI	PW Relay (P521) Watchdog	Energised = Relay Healthy		1	8	30	R1S8DI/30		2077	DI	8	29		Y	Protection scheme may prescribe this
11kV Feeder	ACCB	6XX	11kV Feeder Panel	1	S1061	9	X15:16	DI	OC & EF Relay (P127) Watchdog	Energised = Relay Healthy		1	8	31	R1S8DI/31		2078	DI	8	30		Y	Protection scheme may prescribe this
11kV Feeder	ACCB	6XX	11kV Feeder Panel	1	S1061	10	X15:17	DI	DOC & DEF Voltage Healthy (CB Q2x closed)	Energised = Volts Present		1	8	32	R1S8DI/32	DirProtVolts	2079	DI	8	31		Y	
11kV Feeder	ACCB	6XX	11kV Feeder Panel	1	S1065	1	X15:19	DI	Pilot Wire Trip	Energised = Fault on feeder		1	4	20	R1S4DI/20	PilotWireTrip	4115	DI	16	19	Y	Y	For 11kV hardwired summary alarms are normally required
11kV Feeder	ACCB	6XX	11kV Feeder Panel	1	S1065	2	X15:20	DI	DOC Trip	Energised = O/C Fault		1	4	21	R1S4DI/21	OverCurrent	4116	DI	16	20	Y	Y	
11kV Feeder	ACCB	6XX	11kV Feeder Panel	1	S1065	3	X15:21	DI	Trip Circuit 1 Supervision Alarm	Energised = TC 1 Healthy		1	4	22	R1S4DI/22	TripCircuitSupervision1	4117	DI	16	21		Y	From TC relay
11kV Feeder	ACCB	6XX	11kV Feeder Panel	1	S1065	4	X15:22	DI	Trip Circuit 2 Supervision Alarm	Energised = TC 2 Healthy		1	4	23	R1S4DI/23	TripCircuitSupervision2	4118	DI	16	22		Y	From TC relay
11kV Feeder	ACCB	6XX	11kV Feeder Panel	1	S1065	5	X15:23	DI	CB Fail Alarm (K187L CB)	Energised = CB did not trip – TC1		1	4	24	R1S4DI/24	BreakerFailPW	4119	DI	16	23	Y	Y	
11kV Feeder	ACCB	6XX	11kV Feeder Panel	1	S1065	6	X15:24	DI	CB Fail Alarm (K67 CB)	Energised = CB did not trip – TC2		1	4	25	R1S4DI/25	BreakerFailOC	4120	DI	16	24	Y	Y	
11kV Feeder	ACCB	6XX	11kV Feeder Panel							High = Comms Healthy						PWRelayCommsFail	37888	DI	148	0			Internal to RTU
11kV Feeder	ACCB	6XX	11kV Feeder Panel		WORD-16	BIT 0	P521	Serial	Pilot Wire Trip Alarm (A-Phase)	High = PW Fault						PWTripA	37889	DI	148	1	Y		
11kV Feeder	ACCB	6XX	11kV Feeder Panel		WORD-16	BIT 1	P521	Serial	Pilot Wire Trip Alarm (B-Phase)	High = PW Fault						PWTripB	37890	DI	148	2	Y		
11kV Feeder	ACCB	6XX	11kV Feeder Panel		WORD-16	BIT 2	P521	Serial	Pilot Wire Trip Alarm (C-Phase)	High = PW Fault						PWTripC	37891	DI	148	3	Y		
11kV Feeder	ACCB	6XX	11kV Feeder Panel		WORD-16	BIT 3	P521	Serial	Pilot Wire Trip Alarm (AB-Phase)	High = PW Fault						PWTripAB	37892	DI	148	4	Y		
11kV Feeder	ACCB	6XX	11kV Feeder Panel		WORD-16	BIT 4	P521	Serial	Pilot Wire Trip Alarm (AC-Phase)	High = PW Fault						PWTripAC	37893	DI	148	5	Y		

© RailCorp

Yellow Fill = Conditional I/O

SCADA Equipment Name	SCADA Plant	SCADA Desig	From (Field Equipment Name)	Battery	Cable No	Core No	Field Device Term.	Signal Type	Signal Description	Signal Status	CT or VT Ratio	RTU Rack	RTU Slot	RTU Chan	Terminal	Master Station Mosaic Quantity (Point)	Master Station DNP Index	Master Station I/O Type	Master Station Slot	Master Station Chan	Master Station Invert	Hard wired	Comment
11kV Feeder	ACCB	6XX	11kV Feeder Panel		WORD-16	BIT 5	P521	Serial	Pilot Wire Trip Alarm (BC-Phase)	High = PW Fault						PWTripBC	37894	DI	148	6	Y		
11kV Feeder	ACCB	6XX	11kV Feeder Panel		WORD-16	BIT 6	P521	Serial	Pilot Wire Trip Alarm (ABC-Phase)	High = PW Fault						PWTripABC	37895	DI	148	7	Y		
11kV Feeder	ACCB	6XX	11kV Feeder Panel		WORD-16	BIT 7	P521	Serial	Trip Circuit 1 Supervision Alarm	High = TC1 Healthy						TripCircuitSupervision1	37896	DI	148	8			
11kV Feeder	ACCB	6XX	11kV Feeder Panel		WORD-16	BIT 8	P521	Serial	CB Fail Alarm (TC1 – P521)	High = CB did not trip – TC1						BreakerFailPW	37897	DI	148	9	Y		
11kV Feeder	Feeder	6XX	11kV Feeder Panel		WORD-16	BIT 9	P521	Serial	Pilot Communications Failed	High = Comms Failed						PilotWireFail	37898	DI	148	10	Y		
11kV Feeder	ACCB	6XX	11kV Feeder Panel							High = Comms Healthy						OverCurrRelayCommFail	38144	DI	149	0			Internal to RTU
11kV Feeder	ACCB	6XX	11kV Feeder Panel		WORD-17	BIT 0	P127	Serial	OC Trip Alarm (A-phase)	High = O/C Fault						OverCurrentA	38145	DI	149	1	Y		
11kV Feeder	ACCB	6XX	11kV Feeder Panel		WORD-17	BIT 1	P127	Serial	OC Trip Alarm (B-phase)	High = O/C Fault						OverCurrentB	38146	DI	149	2	Y		
11kV Feeder	ACCB	6XX	11kV Feeder Panel		WORD-17	BIT 2	P127	Serial	OC Trip Alarm (C-phase)	High = O/C Fault						OverCurrentC	38147	DI	149	3	Y		
11kV Feeder	ACCB	6XX	11kV Feeder Panel		WORD-17	BIT 3	P127	Serial	OC Trip Alarm (AB-phase)	High = O/C Fault						OverCurrentAB	38148	DI	149	4	Y		
11kV Feeder	ACCB	6XX	11kV Feeder Panel		WORD-17	BIT 4	P127	Serial	OC Trip Alarm (AC-phase)	High = O/C Fault						OverCurrentAC	38149	DI	149	5	Y		
11kV Feeder	ACCB	6XX	11kV Feeder Panel		WORD-17	BIT 5	P127	Serial	OC Trip Alarm (BC-phase)	High = O/C Fault						OverCurrentBC	38150	DI	149	6	Y		
11kV Feeder	ACCB	6XX	11kV Feeder Panel		WORD-17	BIT 6	P127	Serial	OC Trip Alarm (ABC-phase)	High = O/C Fault						OverCurrentABC	38151	DI	149	7	Y		
11kV Feeder	ACCB	6XX	11kV Feeder Panel		WORD-17	BIT 7	P127	Serial	EF Trip Alarm	High = Earth Fault						OverCurEarthLeakTrip	38152	DI	149	8	Y		
11kV Feeder	ACCB	6XX	11kV Feeder Panel		WORD-17	BIT 8	P127	Serial	Trip Circuit 2 Supervision Alarm	High = TC2 Healthy						TripCircuitSupervision2	38153	DI	149	9			
11kV Feeder	ACCB	6XX	11kV Feeder Panel		WORD-17	BIT 9	P127	Serial	CB FAIL Alarm (TC2 – P127)	High = CB did not trip – TC2						BreakerFailOC	38154	DI	149	10	Y		
11kV Non feeder			33/11 11kV ACCB	1	S1055	1	X15:01		Control +ve						R1S11DO/CH8-a								
11kV Non feeder	ACCB	33/11 11KV	33/11 11kV ACCB	1	S1055	2	X15:03	PO	Remote Close Command			1	11	8	R1S11DO/CH8-b	Close	2823	PO	11	7			
11kV Non feeder			33/11 11kV ACCB	1	S1055	3	X15:02		Control +ve						R1S11DO/CH7-a							Y	
11kV Non feeder	ACCB	33/11 11KV	33/11 11kV ACCB	1	S1055	4	X15:04	PO	Remote Open Command			1	11	7	R1S11DO/CH7-b	Open	2822	PO	11	6		Y	
11kV Non feeder	ACCB	33/11 11KV	33/11 11kV ACCB	1	S1070	1	X15:08	DI	ACCB Open	Energised = CB Open		2	4	26	R2S4DI/26	Status(1)	4121	DI	16	25		Y	
11kV Non feeder	ACCB	33/11 11KV	33/11 11kV ACCB	1	S1070	2	X15:09	DI	ACCB Closed	Energised = CB Closed		2	4	27	R2S4DI/27	Status(0)	4122	DI	16	26		Y	
11kV Non feeder	Switch	33/11 11kV ISOL	33/11 11kV ACCB	1	S1070	3	X15:10	DI	Disconnector Open	Energised = Disc Open		2	4	28	R2S4DI/28	Status(1)	4123	DI	16	27		Y	
11kV Non feeder	Switch	33/11 11kV ISOL	33/11 11kV ACCB	1	S1070	4	X15:11	DI	Disconnector Closed	Energised = Disc Closed		2	4	29	R2S4DI/29	Status(0)	4124	DI	16	28		Y	
11kV Non feeder	Switch	33/11 11kV EARTH	33/11 11kV ACCB	1	S1070	5	X15:12	DI	Earth Switch Open	Energised = ES Open		2	4	30	R2S4DI/30	Status(1)	4125	DI	16	29		Y	
11kV Non feeder	Switch	33/11 11kV EARTH	33/11 11kV ACCB	1	S1070	6	X15:13	DI	Earth Switch Closed	Energised = ES Closed		2	4	31	R2S4DI/31	Status(0)	4126	DI	16	30		Y	
11kV Non feeder	ACCB	33/11 11KV	33/11 11kV ACCB	1	S1070	7	X15:14	DI	CB Motor Spring Charged	Energised = Charged		2	4	32	R2S4DI/32	SpringCharged	4127	DI	16	31		Y	Add delay at Master Station if this comes up while charging
11kV Non feeder	ACCB	33/11 11KV	33/11 11kV ACCB	1	S1070	10	X15:17	DI	OC Relay (P127) Watchdog	Energised = Relay Healthy		2	5	1	R2S5DI/1	OverCurrentRelay	4352	DI	17	0			
11kV Non feeder	ACCB	33/11 11KV	33/11 11kV ACCB	1	S1070	11	X15:18	DI	Trip Circuit 2 Supervision Alarm (TC2)	Energised = TC2 Healthy		2	5	2	R2S5DI/2	TripCircuitSupervision2	4353	DI	17	1			
11kV Non feeder	ACCB	33/11 11KV	33/11 11kV ACCB		IA080	W	X3:1	AI	B Phase AC Current +ve	0-10 mA = 0 - 300 A	300/1A	2	3	33	R2S3AI/CH33+	Current	3872	AI	15	32			Not required for Bus Section ACCBs
11kV Non feeder	ACCB	33/11 11KV	33/11 11kV ACCB		IA080	B	X3:4		B Phase AC Current -ve			2	3	33	R2S3AI/CH33-								
11kV Non feeder	ACCB	33/11 11KV	33/11 11kV ACCB		IA080	S			Screen														
11kV Non feeder	ACCB	33/11 11KV	33/11 11kV ACCB	1	S1067	1		DI	Neutral Leakage Trip	Energised = Neutral Fault		2	5	3	R2S5DI/3	NeutralLeakageProt		DI	17	2	Y		Only required for 33/11 11kV CB
11kV Non feeder	ACCB	11KV BUS SECTION	33/11 11kV ACCB	1	S1067	2		DI	Differential Prot Supply Healthy	Energised = Volts present		2	5	4	R2S5DI/4		4355	DI	17	3		Y	
11kV Non feeder	ACCB	11KV BUS SECTION	33/11 11kV ACCB	1	S1066	1		DI	Cable Diff MTM Trip	Energised = Diff Fault		2	5	5	R2S5DI/5		4356	DI	17	4	Y	Y	Bus section CBs
11kV Non feeder	ACCB	11KV BUS SECTION	33/11 11kV ACCB	1	S1066	2		DI	Busbar Protection MTM Trip	Energised = Busbar Fault		2	5	6	R2S5DI/6		4357	DI	17	5	Y	Y	Bus section CBs
11kV Non feeder	ACCB	6XX	33/11 11kV ACCB	1	S1065	2	X15:20	DI	DOC Trip	Energised = O/C Fault		2	5	7	R2S5DI/7	OverCurrent	4358	DI	17	6	Y	Y	For 11kV hardwired summary alarms are normally required
11kV Non feeder	ACCB	11KV BUS SECTION	33/11 11kV ACCB	1	S1066	6		DI	Trip Circuit 1 Supervision Alarm (TC1)	Energised = TC1 Healthy		2	5	8	R2S5DI/8	TripCircuitSupervision1	4359	DI	17	7		Y	
11kV Non feeder	ACCB	11KV BUS SECTION	33/11 11kV ACCB	1	S1066	7		DI	Trip Circuit 2 Supervision Alarm (TC2)	Energised = TC2 Healthy		2	5	9	R2S5DI/9	TripCircuitSupervision2	4360	DI	17	8		Y	
11kV Non feeder	ACCB	6XX	33/11 11kV ACCB	1	S1065	5	X15:23	DI	CB Fail Alarm (K187L CB)	Energised = CB did not trip – TC1		2	5	10	R2S5DI/10	BreakerFailPW	4361	DI	17	9	Y	Y	
11kV Non feeder	ACCB	6XX	33/11 11kV ACCB	1	S1065	6	X15:24	DI	CB Fail Alarm (K67 CB)	Energised = CB did not trip – TC2		2	5	11	R2S5DI/11	BreakerFailOC	4362	DI	17	10	Y	Y	
11kV Non feeder	ACCB	33KV 1-2 BS	33/11 11kV ACCB	1	S1066	8		DI	Diff Relay (P127) Watchdog	Energised = Relay Healthy		2	5	12	R2S5DI/12	DiffRelay	4363	DI	17	11		Y	Required for Bus Tie CBs
11kV Non feeder	ACCB	11KV BUS SECTION	33/11 11kV ACCB	1	S1066	10		DI	Differential Trip Alarm (A-Phase)	Energised = Diff Fault		2	5	13	R2S5DI/13	DifferentialTripA	4364	DI	17	12	Y		
11kV Non feeder	ACCB	11KV BUS SECTION	33/11 11kV ACCB	1	S1066	11		DI	Differential Trip Alarm (B-Phase)	Energised = Diff Fault		2	5	14	R2S5DI/14	DifferentialTripB	4365	DI	17	13	Y		
11kV Non feeder	ACCB	11KV BUS SECTION	33/11 11kV ACCB	1	S1066	12		DI	Differential Trip Alarm (C-Phase)	Energised = Diff Fault		2	5	15	R2S5DI/15	DifferentialTripC	4366	DI	17	14	Y		
11kV Non feeder	ACCB	33KV 1-2 BS	33/11 11kV ACCB							High = Comms Healthy						DiffRelayCommFail	38400	DI	150	0			Internal to RTU
11kV Non feeder	ACCB	33/11 11KV	33/11 11kV ACCB		WORD-20	BIT 0	P127	Serial	OC Trip Alarm (A-phase)	High = O/C Fault						OverCurrentA	38401	DI	150	1	Y		
11kV Non feeder	ACCB	33/11 11KV	33/11 11kV ACCB		WORD-20	BIT 1	P127	Serial	OC Trip Alarm (B-phase)	High = O/C Fault						OverCurrentB	38402	DI	150	2	Y		
11kV Non feeder	ACCB	33/11 11KV	33/11 11kV ACCB		WORD-20	BIT 2	P127	Serial	OC Trip Alarm (C-phase)	High = O/C Fault						OverCurrentC	38403	DI	150	3	Y		
11kV Non feeder	ACCB	33/11 11KV	33/11 11kV ACCB		WORD-20	BIT 3	P127	Serial	OC Trip Alarm (AB-phase)	High = O/C Fault						OverCurrentAB	38404	DI	150	4	Y		
11kV Non feeder	ACCB	33/11 11KV	33/11 11kV ACCB		WORD-20	BIT 4	P127	Serial	OC Trip Alarm (AC-phase)	High = O/C Fault						OverCurrentAC	38405	DI	150	5	Y		
11kV Non feeder	ACCB	33/11 11KV	33/11 11kV ACCB		WORD-20	BIT 5	P127	Serial	OC Trip Alarm (BC-phase)	High = O/C Fault						OverCurrentBC	38406	DI	150	6	Y		
11kV Non feeder	ACCB	33/11 11KV	33/11 11kV ACCB		WORD-20	BIT 6	P127	Serial	OC Trip Alarm (ABC-phase)	High = O/C Fault						OverCurrentABC	38407	DI	150	7	Y		
11kV Non feeder	ACCB	33/11 11KV	33/11 11kV ACCB		WORD-20	BIT 7	P127	Serial	Earth Fault Trip Alarm	High = Earth Fault						EarthFault	38408	DI	150	8	Y		
11kV Non feeder	ACCB	33/11 11KV	33/11 11kV ACCB		WORD-20	BIT 8	P127	Serial	Trip Circuit 1 Supervision Alarm	High = TC1 Healthy						TripCircuitSupervision1	38409	DI	150	9			
11kV Non feeder	ACCB	33/11 11KV	33/11 11kV ACCB		WORD-20	BIT 9	P127	Serial	CB Fail Alarm (TC1 or TC2)	High = CB did not trip						BreakerFailOC	38410	DI	150	10			
DCCB BAR or FAR			DCCB	2			X15:01		Control +ve						R1S12DO/CH2-a							Y	
DCCB BAR or FAR	BARCB	481	DCCB	2	S1101	1	X15:03	PO	Remote Close Command			1	12	2	R1S12DO/CH2-b	Close	3073	PO	12	1		Y	
DCCB BAR or FAR			DCCB	2			X15:02		Control +ve						R1S12DO/CH1-a							Y	
DCCB BAR or FAR	BARCB	481	DCCB	2	S1101	2	X15:04	PO	Remote Open Command			1	12	1	R1S12DO/CH1-b	Open	3072	PO	12	0		Y	
DCCB BAR or FAR	BARCB	481	DCCB					PO	Raise Trip Setting			2	12	5	R2S12DO/CH5		3076	PO	12	4		Y	
DCCB BAR or FAR	BARCB	481	DCCB	2	S1105	1	D	DI	DCCB Open	Energised = Open		2	5	16	R2S5DI/16	Status(1)	3843	DI	15	3		Y	
DCCB BAR or FAR	BARCB	481	DCCB	2	S1105	2	C	DI	DCCB Closed	Energised = Closed		2	5	17	R2S5DI/17	Status(0)	3844	DI	15	4		Y	
DCCB BAR or FAR	BARCB	481	DCCB	2	S1105	3	P	DI	Delta-I Relay Operated	Energised = Delta I Operation		2	5	18	R2S5DI/18	Deltal_Trip	3845	DI	15	5	Y	Y	
DCCB BAR or FAR	BARCB	481	DCCB	2	S1105	4	T	DI	Low Trip Setting Indication	Energised = Low Trip Setting		2	5	19	R2S5DI/19		3846	DI	15	6		Y	
DCCB BAR or FAR	BARCB	481	DCCB	2	S1105	5	W	DI	High Trip Setting Indication	Energised = High Trip Setting		2	5	20	R2S5DI/20		3847	DI	15	7		Y	
DCCB BAR or FAR	BARCB	481	DCCB		IA140	W	G	AI	DC Feeder Current +ve	20mA = 10000A		2	3	34	R2S3AI/CH34+	Current	3873	AI	15	33		Y	
DCCB BAR or FAR	BARCB	481	DCCB		IA140	B	F		DC Feeder Current -ve			2	3	34	R2S3AI/CH34-							Y	
DCCB BAR or FAR	BARCB	481	DCCB		IA140	S	I		Screen													Y	
1500VDC BS Switch			1500V BS Switch	2	S1160	1		+ve	125V dc common														
1500VDC BS Switch	Switch	1500V BS	1500V BS Switch	2	S1160	2		DI	Switch Open	Energised = Open		2	3	9	R2S3DI/9	Status(0)	3848	DI	15	8			
1500VDC BS Switch	Switch	1500V BS	1500V BS Switch	2	S1160	3		DI	Switch Closed	Energised = Closed		2	3	10	R2S3DI/10	Status(1)	3849	DI	15	9			
1500VDC BS Switch	DigitalEquip	DC BUS 1 LIVE	1500V BS Switch	2	S1160	4		DI	1500V DC Bus 1 Live	Energised = Live		2	3	11	R2S3DI/11	DigStatus	3850	DI	15	10			
1500VDC BS Switch	DigitalEquip	DC BUS 2 LIVE	1500V BS Switch	2	S1160	5		DI	1500V DC Bus 2 Live	Energised = Live		2	3	12	R2S3DI/12	DigStatus	3851	DI	15	11			
1500VDC BS Switch	DigitalEquip	DC BUS LINK SVC POS	1500V BS Switch	2	S1160	6		DI	Link in Service Position	Energised = In Service		2	3	13	R2S3DI/13	DigStatus	3852	DI	15	12			
1500VDC BS Switch	Switch	DC BUS LINK AMPS	1500V BS Switch		IA150	W		AI	Link Switch DC Current +ve	20mA = 0-1000A		2	9	1	R2S9AI/CH1+	Current	3874	AI	15	34			
1500VDC BS Switch			1500V BS Switch		IA150	B			Link Switch DC Current +ve			2	9	1	R2S9AI/CH1-								
1500VDC BS Switch			1500V BS Switch		IA150	S			Screen														
Reactor			Common Equipment Panel	1	S4005	1		+ve	125V dc common														No controls for reactor
Reactor	Reactor	REACTOR	Common Equipment Panel	1	S4005	2		DI	Reactor Over Pressure Trip	Energised = Tripped		2	5	16	R2S5DI/16	OilOverPressure	4367	DI	17	15	Y	Y	
Reactor	Reactor	REACTOR	Common Equipment Panel	1	S4005	3		DI	Reactor Protection Supply Healthy	Energised = Supply Healthy		2	5	17	R2S5DI/17	ACSupply	4368	DI	17	16		Y	
Reactor			Negative Reactor	1	S4006	1		+ve	125V dc Common													Y	
Reactor	Reactor	REACTOR	Negative Reactor	1	S4006	2		DI	Reactor Oil Overtemp Trip	Energised = Tripped		2	5	18	R2S5DI/18	OilOverTempTrip	4369	DI	17	17	Y	Y	
Reactor	Reactor	REACTOR	Negative Reactor	1	S4006	3		DI	Reactor Oil Overtemp Alarm	Energised = Healthy		2	5	19	R2S5DI/19	OilOverTemp	4370	DI	17	18		Y	
Reactor	Reactor	REACTOR	Negative Reactor		IA120	W		AI	Reactor Oil Temp +ve	20mA = 0-150C		2	4	33	R2S4AI/CH33+							Y	Wired to RTU but not sent to Master Station
Reactor	Reactor	REACTOR	Negative Reactor		IA120	B			Reactor Oil Temp -ve			2	4	33	R2S4AI/CH33-							Y	
Reactor	Reactor	REACTOR	Negative Reactor		IA120	S			Screen													Y	
Reactor	Reactor	REACTOR	Negative Reactor		IA121	W		AI	Reactor Winding Temp +ve	20mA = 0-150C		2	4	34	R2S4AI/CH34+							Y	Wired to RTU but not sent to Master Station
Reactor	Reactor	REACTOR	Negative Reactor		IA121	B			Reactor Winding Temp -ve			2	4	34	R2S4AI/CH34-							Y	
Reactor	Reactor	REACTOR	Negative Reactor		IA121	S			Screen													Y	
REC	REC	REC	Rail Earth Contactor		IA130	W		AI	Rail to Earth Volts +ve (Rail)	0-20ma = 0-800V		2	4	35	R2S4AI/CH35+	RailEarthVoltage	4130	AI	16	34		Y	
REC	REC	REC	Rail Earth Contactor		IA130	B			Rail to Earth Volts -ve (Earth)			2	4	35	R2S4AI/CH35-							Y	
REC	REC	REC	Rail Earth Contactor		IA130	S			Screen													Y	
REC			Rail Earth Contactor	1	S1109	1		+ve	125V DC Common													Y	
REC	REC	REC	Rail Earth Contactor	1	S1109	2		DI	Rail Earth Contactor Open	Energised = REC Open		2	5	20	R2S5DI/20	Status(1)	4371	DI	17	19		Y	Normal state is open
REC	REC	REC	Rail Earth Contactor	1	S1109	3		DI	Rail Earth Contactor Closed	Energised = REC Closed		2	5	21	R2S5DI/21	Status(0)	4372	DI	17	20		Y	
REC			Rail Earth Contactor	1	S1101	1			Control +ve						R1S12DO/CH4-a							Y	
REC	REC	REC	Rail Earth Contactor	1	S1101	2		PO	Remote Close Command			1	12	4	R1S12DO/CH4-b	Close	3075	PO	12	3		Y	
REC			Rail Earth Contactor	1	S1101	3			Control +ve						R1S12DO/CH3-a							Y	
REC	REC	REC	Rail Earth Contactor	1	S1101	4		PO	Remote Open Command			1	12	3	R1S12DO/CH3-b	Open	3074	PO	12	2		Y	
Battery Charger	BattCharger	BATTCHARGER1	125V DC Battery Charger	1	S1151	1		+ve	125V DC Common													Y	
Battery Charger	BattCharger	BATTCHARGER1	125V DC Battery Charger	1	S1151	2		DI	No1 Battery - Charger Fault	Energised = Charger Healthy		2	5	22	R2S5DI/22	Fail	4373	DI	17	21		Y	Combination of all 'other' alarms
Battery Charger	BattCharger	BATTCHARGER1	125V DC Battery Charger	1	S1151	3		DI	No1 Battery – O/P Volts Low	Energised = Volts OK (above limit)		2	5	23	R2S5DI/23	LowVolts	4374	DI	17	22		Y	
Battery Charger	BattCharger	BATTCHARGER1	125V DC Battery Charger	1	S1151	4		DI	No1 Battery – AC Failed	Energised = AC Healthy		2	5	24	R2S5DI/24	ACSupply	4375	DI	17	23		Y	Combination of 'AC Normal' & 'CB Open' indications

© RailCorp

Superseded by T HR E 11001 DD F1

Yellow Fill = Conditional I/O

SCADA Equipment Name	SCADA Plant	SCADA Desig	From (Field Equipment Name)	Battery	Cable No	Core No	Field Device Term.	Signal Type	Signal Description	Signal Status	CT or VT Ratio	RTU Rack	RTU Slot	RTU Chan	Terminal	Mosaic Quantity (Point)	DNP Index	I/O Type	Slot	Chan	Invert	Hard wired	Comment
Battery Charger	BattCharger	BATTCHARGER1	125V DC Battery Charger		IA100	W		AI	No1 Battery - Voltage +ve	0-10mA = 0-150VDC		2	4	36	R2S4AI/CH36+	Voltage	4131	AI	16	35		Y	
Battery Charger	BattCharger	BATTCHARGER1	125V DC Battery Charger		IA100	B			No1 Battery - Voltage -ve			2	4	36	R2S4AI/CH36-							Y	
Battery Charger	BattCharger	BATTCHARGER1	125V DC Battery Charger		IA100	S			Screen													Y	
Battery Charger	BattCharger	BATTCHARGER1	125V DC Battery Charger	1	S1151	12			Battery Room Ventilation Fan Fail	Energised = Fan working		2	5	25	R2S5DI/25	VentFan	4376	DI	17	24		Y	Required for rooms with forced ventilation
Auxiliary Supply			415/240V AC Board	1	S1150	1		+ve	125V DC Common													Y	
Auxiliary Supply	Contactor	NO1 415V AUX	415/240V AC Board	1	S1150	2		DI	No.1 Aux Tx In Service	Energised = In Service		2	5	26	R2S5DI/26	Status	4377	DI	17	25		Y	Not required if from Rectifier Tx or 11kV Aux CB
Auxiliary Supply	Contactor	NO2 415V AUX	415/240V AC Board	1	S1150	3		DI	No.2 Aux Tx In Service	Energised = In Service		2	5	27	R2S5DI/27	Status	4378	DI	17	26		Y	Not required if from Rectifier Tx or 11kV Aux CB
Auxiliary Supply	DigitalEquip	AUX C/O MANUAL	415/240V AC Board	1	S1150	4		DI	Auto Selected	Energised = Auto		2	5	28	R2S5DI/28	DigStatus	4379	DI	17	27		Y	
Auxiliary Supply	DigitalEquip	NO1 AUX SUPPLY	415/240V AC Board	1	S1150	5		DI	No1 415V Healthy	Energised = Healthy		2	5	29	R2S5DI/29	DigStatus	4380	DI	17	28		Y	Not required if from Rectifier Tx or 11kV Aux CB
Auxiliary Supply	DigitalEquip	NO2 AUX SUPPLY	415/240V AC Board	1	S1150	6		DI	No2 415V Healthy	Energised = Healthy		2	5	30	R2S5DI/30	DigStatus	4381	DI	17	29		Y	Not required if from Rectifier Tx or 11kV Aux CB
Auxiliary Supply	DigitalEquip	ASV	415/240V AC Board	1	S1150	7		DI	Aux Supply Volts (C/O switch O/P) Phase Failure relay	Energised = Healthy		2	5	31	R2S5DI/31	DigStatus	4382	DI	17	30		Y	
Staff alarm			Staff Switch	1	S1170	1		+ve	125V dc common													Y	One input is required per area, see EL 0204559.
Staff alarm	Staff	STAFF	Staff Switch	1	S1170	2		DI	Staff access switch (Intruder Detection)	Energised = Staff present		1	4	9	R1S4DI/9	Switch	1032	DI	4	8		Y	
Staff alarm			Door Reeds	1	S1171	1		+ve	125V dc common													Y	
Staff alarm	Staff	STAFF	Door Reeds	1	S1171	2		DI	Door Reed Switches for HV Room	Energised = Doors Closed		1	4	10	R1S4DI/10	DoorReed	1033	DI	4	9		Y	One input is required per area, see EL 0204559.
Staff alarm	Staff	STAFF						DI	Staff status	High = Staff absent						Status	16640	DI	65	0			One per area. Internal to RTU.
Supy Phone	SupPhone	SUPY PHONE	Supy Phone	1												PushButton	1035	DI	4	11	Y	Y	For old locations: Gives a ring Indication to EOC
Supy Phone			Bell Silence Button	1	S1178B	1		+ve	125V DC Common													Y	
Supy Phone	SupPhone	SUPY PHONE	Bell Silence Button	1	S1178B	2		DI	HV Equip Room VoIP Phone Buzzer Silence PB	Energised = Silence Alarm		1	4	13	R1S4DI/13	OffHook	1036	DI	4	12	Y	Y	One input is required per area, see EL 0204559.
Supy Phone	SupPhone	SUPY PHONE														Call	17152	PO	67	0			Goes to LCR to ring buzzer
Supy Phone			Piezo Buzzer	1	S1175	1		+ve	125V DC Common													Y	This output is for staff alarm and phone buzzer
Supy Phone			Piezo Buzzer	1	S1175	2		Latch	HV Equip Room Audible Alarm (Latched)	Energised = Sound Alarm		1	9	3	R1S9DO/CH3			PO				Y	Hard wired output to control staff/phone bell via local control programme
RTU alarms	DigitalEquip	RTU FAULT	RTU Cabinet					DI	Internal RTU Fault	High = Healthy						DigStatus	16641	DI	65	1			Internal to RTU, for Foxboro RTUs
RTU alarms	DigitalEquip	ALARM BUS	RTU Cabinet	1	Internal	1		DI	Alarm Bus Fuse	Energised = Healthy		1	4	1	R1S4DI/1	DigStatus	1024	DI	4	0		Y	
RTU alarms	DigitalEquip	CONTROLS DISABLED	RTU Cabinet	1	Internal	1		DI	Remote Controls Disabled	Energised = Controls Disabled		1	4	2	R1S4DI/2	DigStatus	1025	DI	4	1		Y	Switch in RTU, will only affect some controls
RTU alarms	DigitalEquip	DCCB CTRL BAT1	RTU Cabinet	2	Internal	1		DI	DCCB Control Fuse	Energised = Healthy		1	4	3	R1S4DI/3	DigStatus	1026	DI	4	2		Y	
Comms			C&CS switch	1	S1181	1	K2:A1	+ve	48V DC Common													Y	
Comms	DigitalEquip	COMMS SWITCH A	C&CS switch	1	S1181	2	K2:A2	DI	Comms Panel - Switch A Fault	Energised = Healthy		1	4	4	R1S4DI/4	DigStatus	1027	DI	4	3		Y	
Comms			C&CS switch	1	S1181	3	K4:A1	+ve	48V DC Common													Y	
Comms	DigitalEquip	COMMS SWITCH B	C&CS switch	1	S1181	4	K4:A2	DI	Comms Panel - Switch B Fault	Energised = Healthy		1	4	5	R1S4DI/5	DigStatus	1028	DI	4	4		Y	
Comms	DigitalEquip	SWITCH A 48V SUPPLY	Power Supply in RTU	1	Internal	1		DI	125/48V DC Supply A Fail	Energised = Healthy		1	4	6	R1S4DI/6	DigStatus	1029	DI	4	5		Y	
Comms	DigitalEquip	SWITCH B 48V SUPPLY	Power Supply in RTU	1	Internal	1		DI	125/48V DC Supply B Fail	Energised = Healthy		1	4	7	R1S4DI/7	DigStatus	1030	DI	4	6		Y	
Dummy CB	TestCB	CIRCUIT BREAKER	RTU Cabinet	1	Internal	1		DI	CB Closed	Energised = Closed		1	4	8	R1S4DI/8	Status	1031	DI	4	7		Y	Normally open, relay latches closed when close control sent
Dummy CB			RTU Cabinet	1	Internal	2			Control +ve						R1S9DO/CH1-a							Y	
Dummy CB	TestCB	CIRCUIT BREAKER	RTU Cabinet	1	Internal	3		PO	Remote Open Command			1	9	1	R1S9DO/CH1-b	Open	2304	PO	9	0		Y	
Dummy CB			RTU Cabinet	1	Internal	4			Control +ve						R1S9DO/CH2-a							Y	
Dummy CB	TestCB	CIRCUIT BREAKER	RTU Cabinet	1	Internal	5		PO	Remote Close Command			1	9	2	R1S9DO/CH2-b	Close	2305	PO	9	1		Y	
Fire System			Fire Panel	1	S1182	1		+ve	125V DC Common													Y	From positive alarm bus
Fire System	DigitalEquip	FIRE ALARM FAULT	Fire Panel	1	S1182	2		DI	Fire Detection System Faulty	Energised = Healthy		2	6	1	R2S6DI/1	DigStatus	4608	DI	18	0		Y	Interposing relay may be required
Fire System	DigitalEquip	FIRE ALARM ISOLATED	Fire Panel	1	S1182	3		DI	Fire Detection System Isolated	Energised = Isolated		2	6	2	R2S6DI/2	DigStatus	4609	DI	18	1		Y	Interposing relay may be required
Fire System	DigitalEquip	FIRE ALARM	Fire Panel	1	S1182	4		DI	Fire alarm	Energised = Fire detected		2	6	3	R2S6DI/3	DigStatus	4610	DI	18	2		Y	Interposing relay may be required
Spares			Panel	1	S3000	15																	Spare field cable core
Spares			Panel	1	S3000	16																	Spare field cable core

Superseded by T HR EL 11001 PR F1

Common Digital Input Wiring

Digital Input Cross Wiring Schedule Example

Cable	Core	Function	Terminal	
S1001	1	ACCB Open	R1S5DI/1	Field equipment common
	2	ACCB Closed	R1S5DI/2	
S4005	1	125V DC		RTU common
	2	Reactor Over Pressure T	R2S5DI/16	
	3	Reactor Protection Suppl	R2S5DI/17	

Wiring Required

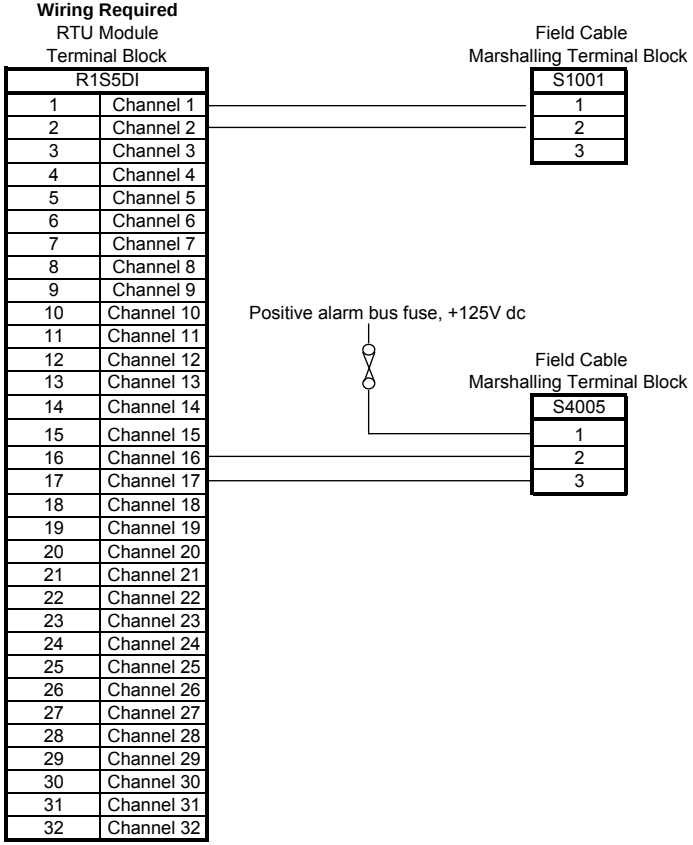

Digital Input Wiring

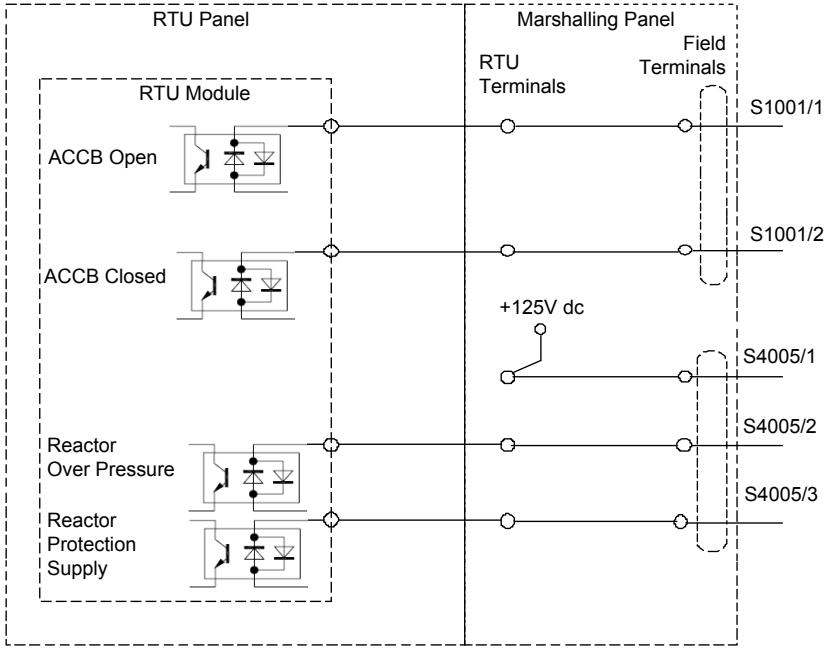

© RailCorp

Superseded by T HR EL 11001 PR F1

Analogue Input Cross Wiring Schedule Example

Cable	Core	Function	Terminal
IA210	W	B ph Current	R1S5AI/36+
	BLK	-ve	R1S5AI/36-
	SCR	Screen	

Wiring Required

RTU Module
Terminal Block

R1S5AI	
1+	Channel 33
1–	Channel 33
2+	Channel 34
2–	Channel 34
3+	Channel 35
3–	Channel 35
4+	Channel 36
4–	Channel 36

Field Cable
Marshalling Terminal Block

IA210
1
2
SCR

Superseded by T HR EL 11001 PR F1

CONTROL WIRING (OTHER THAN DCCB)

Cross Wiring Schedule Example

Cable	Core	Function	Terminal
S133	1	125V +ve	R1S9DO/2-a
	2	Remote Close	R1S9DO/2-b
	3	125V +ve	R1S9DO/1-a
	4	Remote Open	R1S9DO/1-b

Required Wiring

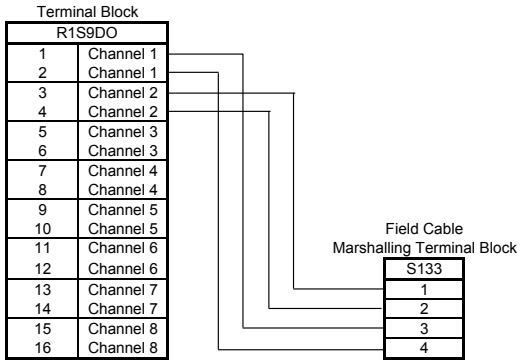

ACCB Control Wiring

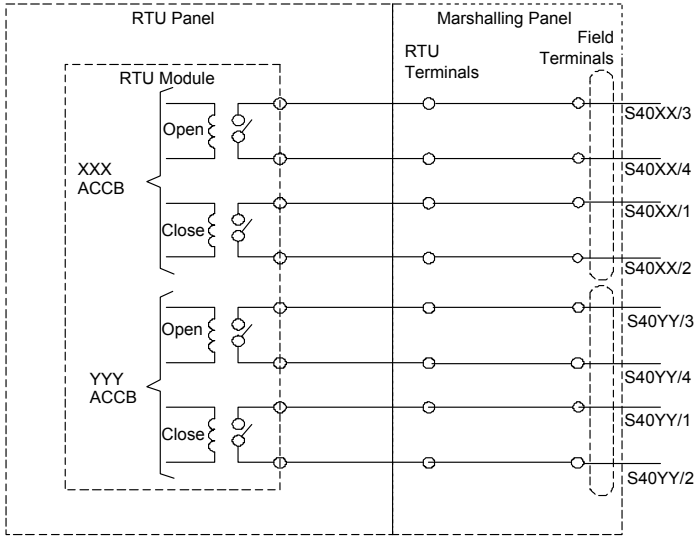

Tap Changer Control Wiring

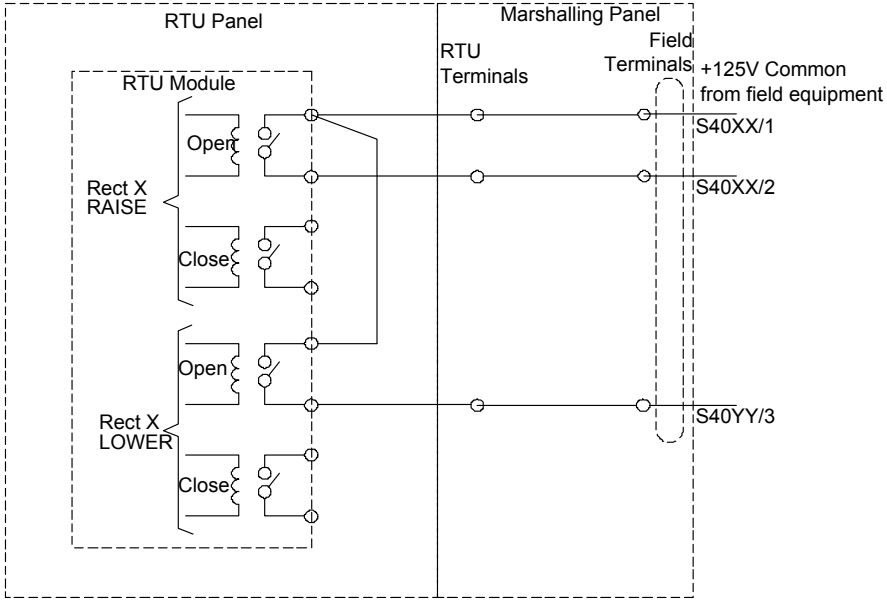

© RailCorp

Superseded by T HR EL 11001 PR F1

DCCB Wiring

Cross Wiring Schedule Example

Cable	Core	Function	Terminal	DCCB Control Bus
		1500V DCCB 31		
S640	1 2	125V +ve Remote Close	R2S11DO/CH8-a R2S11DO/CH8-b	●
	3 4	125V +ve Remote Open	R2S11DO/CH7-a R2S11DO/CH7-b	●

Wiring Required

RTU Module Terminal Block

R2S11DO	
1	Channel 1
2	Channel 1
3	Channel 2
4	Channel 2
5	Channel 3
6	Channel 3
7	Channel 4
8	Channel 4
9	Channel 5
10	Channel 5
11	Channel 6
12	Channel 6
13	Channel 7
14	Channel 7
15	Channel 8
16	Channel 8

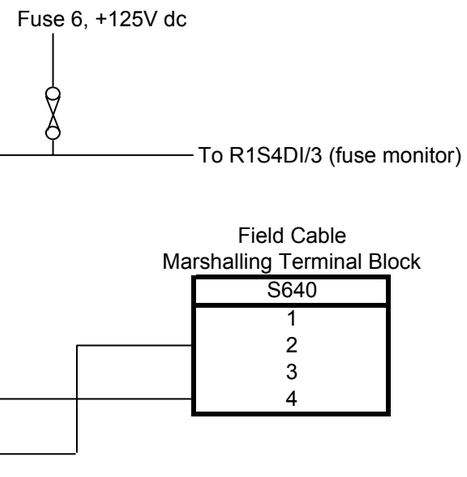

DCCB Control Wiring

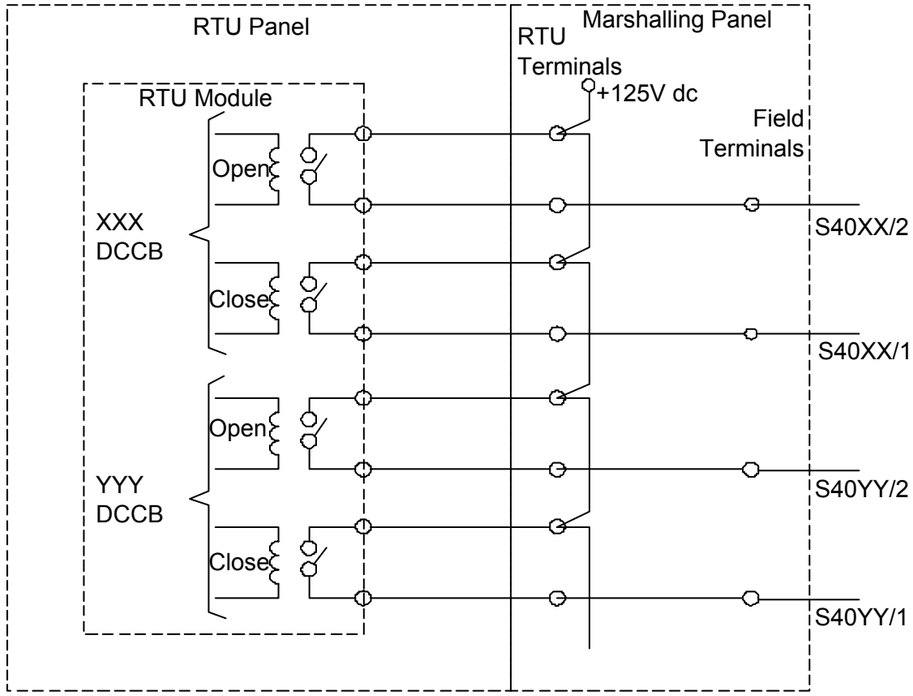

Superseded by T HR EL 11001 PR F1

48V Supplies and Fibre Cable Layout

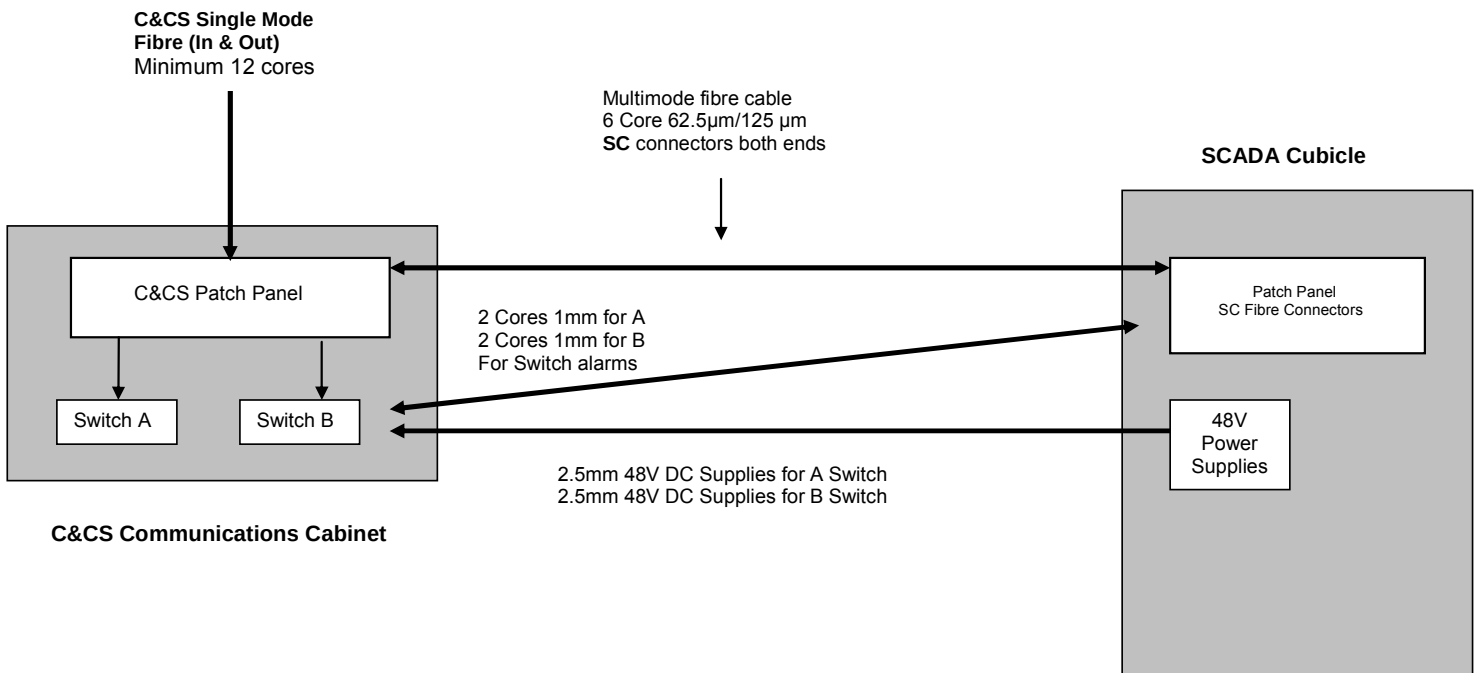

These materials are required

1. 3 off multimode patch leads SC to SC, length as required (with 3 metres spare) for RTU (Patch panel) to C&CS (multimode patch panel)
2. 2 off multimode patch leads ST to SC, 62.5/125um, 2 metres for media converter (C&CS cabinet) to multimode patch panel (C&CS Cabinet)
3. 2 off CAT5 patch leads for Media Converters to Comms switches
4. 2 off multimode patch leads ST to SC 62.5/125um, 2 metres for – RTU patch panel to RTU
5. 2 off patch panels – 1RU high, rack mount, 24 way panel

© RailCorp

UPFL11001PDR1 Uncontrolled when Printed

I/O No.	SCADA Equipment Name	Plant	Desig	From (Field Equipment Name)	Battery	Cable No	Core No	Field Device Terminal	Signal Type	Signal Description	Signal Status	CT or VT Ratio	RTU Rack	RTU Slot	RTU Chan	Terminal	DCCB Ctrl Bus	Pos Alarm Bus	Neg Alarm Bus	Loop	Master Station Mosaic Quantity (Point)	DNP Index	Type	Slot	Chan	Invert	Hard wired	Comment	Required by Standard
1	33kV Feeder			33kV Feeder Panel	1	S1000	1	X15:01		Control +ve						R1S10DO/CH2-a											Y		Y
2	33kV Feeder	ACCB	7XX	33kV Feeder Panel	1	S1000	2	X15:03	PO	Remote Close Command			1	10	4	R1S10DO/CH2-b					Close	2561	PO	10	1		Y		Y
3	33kV Feeder			33kV Feeder Panel	1	S1000	3	X15:02		Control +ve						R1S10DO/CH1-a											Y		Y
4	33kV Feeder	ACCB	7XX	33kV Feeder Panel	1	S1000	4	X15:04	PO	Remote Open Command			1	10	3	R1S10DO/CH1-b					Open	2560	PO	10	0		Y		Y
5	33kV Feeder	ACCB	7XX	33kV Feeder Panel	1	S1001	1	X15:08	DI	ACCB Open	Energised = CB Open		1	5	1	R1S5DI/1					Status(1)	1280	DI	5	0		Y		Y
6	33kV Feeder	ACCB	7XX	33kV Feeder Panel	1	S1001	2	X15:09	DI	ACCB Closed	Energised = CB Closed		1	5	2	R1S5DI/2					Status(0)	1281	DI	5	1		Y		Y
7	33kV Feeder	Switch	7XX ISOL	33kV Feeder Panel	1	S1001	3	X15:10	DI	Disconnector Open	Energised = Disc Open		1	5	3	R1S5DI/3					Status(1)	1282	DI	5	2		Y		Y
8	33kV Feeder	Switch	7XX ISOL	33kV Feeder Panel	1	S1001	4	X15:11	DI	Disconnector Closed	Energised = Disc Closed		1	5	4	R1S5DI/4					Status(0)	1283	DI	5	3		Y		Y
9	33kV Feeder	Switch	7XX EARTH	33kV Feeder Panel	1	S1001	5	X15:12	DI	Earth Switch Open	Energised = ES Open		1	5	5	R1S5DI/5					Status(1)	1284	DI	5	4		Y		Y
10	33kV Feeder	Switch	7XX EARTH	33kV Feeder Panel	1	S1001	6	X15:13	DI	Earth Switch Closed	Energised = ES Closed		1	5	6	R1S5DI/6					Status(0)	1285	DI	5	5		Y		Y
11	33kV Feeder	ACCB	7XX	33kV Feeder Panel	1	S1001	7	X15:14	DI	Circuit Earthed	Energised = Circuit Earthed		1	5	7	R1S5DI/7					CircuitEarthed	1286	DI	5	6		Y	Not required as switches give necessary information	
12	33kV Feeder	ACCB	7XX	33kV Feeder Panel	1	S1001	8	X15:15	DI	CB Motor Spring Charged	Energised = Charged		1	5	8	R1S5DI/8					SpringCharged	1287	DI	5	7		Y	Add delay at Master Station if this comes up while charging	Y
13	33kV Feeder	ACCB	7XX	33kV Feeder Panel						Spring Charging																		Not required. Already have Spring Charged	
14	33kV Feeder	ACCB	7XX	33kV Feeder Panel	1	S1001	9	X15:16	DI	ILIS Trip	Energised = Trip		1	5	9	R1S5DI/9					ILISTrip	1288	DI	5	8	Y	Y		
15	33kV Feeder	ACCB	7XX	33kV Feeder Panel	1	S1001	10	X15:17	DI	ILIS Fault	Energised = Healthy		1	5	10	R1S5DI/10					ILISFault	1289	DI	5	9		Y		
16	33kV Feeder	ACCB	7XX	33kV Feeder Panel		IA001	W	X3:1	AI	B Phase AC Current +ve	0-10 mA = 0 – 500 A	500/1A	1	5	33	R1S5AI/CH33+					Current	1312	AI	5	32		Y	Transducer is 1A/10mA	Y
17	33kV Feeder	ACCB	7XX	33kV Feeder Panel		IA001	B	X3:4		B Phase AC Current -ve			1	5	33	R1S5AI/CH33-											Y		
18	33kV Feeder	ACCB	7XX	33kV Feeder Panel		IA001	S			Screen																	Y		
19	33kV Feeder	ACCB	7XX	33kV Feeder Panel	1	CM957	PR1	X15:32,33	PULSED	EDMI Mk6E kWh Meter (p10, output 1)	Energised = Pulse		1	5	10	R1S5DI/10					Energy	1290	DI	5	10		Y	Bulk supply feeders only.	
20	33kV Feeder	ACCB	7XX	33kV Feeder Panel	1	IA160			AI	Power Factor	0-10mA = 0-1	1/10mA	1	5	34						PowerFactor	1313	AI	5	33		Y	Bulk supply feeders only.	
21	33kV Feeder	VT	7XX	33kV Feeder Panel	1	S1017	5	X15:29	DI	Phase Failure (K47)	Energised = Healthy																	Not required. The VT may be here, but the master station links it with the bus section.	
22	33kV Feeder	VT	7XX	33kV Feeder Panel		IA060	W	X3:6	AI	Feeder Voltage (A-C Phase) +ve	0-20 mA = 0 – 37.5 kV	33kV//110V																Not required. The VT may be here, but the master station links it with the bus section.	
23	33kV Feeder	VT	7XX	33kV Feeder Panel		IA060	B	X3:7		Feeder Voltage (A-C Phase) -ve																		Not required. The VT may be here, but the master station links it with the bus section.	
24	33kV Feeder	VT	7XX	33kV Feeder Panel		IA060	S			Screen																		Not required. The VT may be here, but the master station links it with the bus section.	
25	33kV Feeder	ACCB	7XX	33kV Feeder Panel	1	S1002	2	X15:30	DI	VT MCB Closed (Directional Protection Voltage Fail)	Energised = MCB Closed		1	5	12	R1S5DI/12					DirProtVoltage	1291	DI	5	11		Y		
26	33kV Feeder	ACCB	7XX	33kV Feeder Panel	1	S1003	1		DI	Trip Circuit 1 Supervision Alarm	Energised = TC1 Healthy		1	5	13	R1S5DI/13					TripCircuitSupervision1	1292	DI	5	12		Y	Required for dedicated TC relays	Y
27	33kV Feeder	ACCB	7XX	33kV Feeder Panel	1	S1003	2		DI	Trip Circuit 2 Supervision Alarm	Energised = TC2 Healthy		1	5	14	R1S5DI/14					TripCircuitSupervision2	1293	DI	5	13		Y	Required for dedicated TC relays	Y
28	33kV Feeder	ACCB	7XX	33kV Feeder Panel					DI	CB Fail Alarm (K187L CB)	Energised = CB did not trip – TC1															Y		Not required. Comes from relay	
29	33kV Feeder	ACCB	7XX	33kV Feeder Panel					DI	CB Fail Alarm (K67 CB)	Energised = CB did not trip – TC2															Y		Not required. Comes from relay	
30	33kV Feeder	ACCB	7XX	33kV Feeder Panel	1	S1004	1		DI	Low Gas	Energised = Gas Level OK		1	5	9	R1S5DI/9					Low Gas	1294	DI	5	14		Y	For outdoor SF6 switchgear	
31	33kV Feeder	ACCB	7XX	33kV Feeder Panel	1	S1004	2		DI	Low Gas Lockout	Energised = Locked out		1	5	10	R1S5DI/10					Low Gas L/O	1295	DI	5	15	Y	Y	For outdoor SF6 switchgear	
32	33kV Feeder	ACCB	7XX	33kV Feeder Panel	1	S1004	3		DI	Motor Trouble	Energised = Motor Healthy		1	5	11	R1S5DI/11					Motor Trouble	1296	DI	5	16		Y	Switchgear dependent	
33	33kV Feeder	ACCB	7XX	33kV Feeder Panel																	PWRelayCommsEnabled							Not required. It is internal to RTU and not used.	
34	33kV Feeder	ACCB	7XX	33kV Feeder Panel							High = Comms Healthy										PWRelayCommsFail	37120	DI	145	0			Internal to RTU	
35	33kV Feeder	ACCB	7XX	33kV Feeder Panel	1	S1002	1	X15:24	DI	PW Relay (P521) Watchdog	Energised = Relay Healthy		1	5	18	R1S5DI/18					PWRelayFail	1297	DI	5	17		Y		Y
36	33kV Feeder	ACCB	7XX	33kV Feeder Panel						PW Relay Voltage Healthy (CB Q3x closed)	Energised = Volts present																	Not required	
37	33kV Feeder	ACCB	7XX	33kV Feeder Panel	1	S1002	3		DI	Pilot Wire Trip (mhobo4)	Energised = Fault on feeder		1	5	19	R1S5DI/19					PilotWireTrip	1298	DI	5	18	Y	Y	Not required, except for older relays.	
38	33kV Feeder	ACCB	7XX	33kV Feeder Panel		Word 2	BIT 0	P521	Serial	Pilot Wire Trip Alarm (A-Phase)	High = PW Fault										PWTripA	37121	DI	145	1	Y			
39	33kV Feeder	ACCB	7XX	33kV Feeder Panel		Word 2	BIT 1	P521	Serial	Pilot Wire Trip Alarm (B-Phase)	High = PW Fault										PWTripB	37122	DI	145	2	Y			
40	33kV Feeder	ACCB	7XX	33kV Feeder Panel		Word 2	BIT 2	P521	Serial	Pilot Wire Trip Alarm (C-Phase)	High = PW Fault										PWTripC	37123	DI	145	3	Y			
41	33kV Feeder	ACCB	7XX	33kV Feeder Panel		Word 2	BIT 3	P521	Serial	Pilot Wire Trip Alarm (AB-Phase)	High = PW Fault										PWTripAB	37124	DI	145	4	Y			
42	33kV Feeder	ACCB	7XX	33kV Feeder Panel		Word 2	BIT 4	P521	Serial	Pilot Wire Trip Alarm (AC-Phase)	High = PW Fault										PWTripAC	37125	DI	145	5	Y			
43	33kV Feeder	ACCB	7XX	33kV Feeder Panel		Word 2	BIT 5	P521	Serial	Pilot Wire Trip Alarm (BC-Phase)	High = PW Fault										PWTripBC	37126	DI	145	6	Y			
44	33kV Feeder	ACCB	7XX	33kV Feeder Panel		Word 2	BIT 6	P521	Serial	Pilot Wire Trip Alarm (ABC-Phase)	High = PW Fault										PWTripABC	37127	DI	145	7	Y			
45	33kV Feeder	ACCB	7XX	33kV Feeder Panel																	PWTripEarth							Not required	
46	33kV Feeder	ACCB	7XX	33kV Feeder Panel		Word 2	BIT 7	P521	Serial	Trip Circuit 1 Supervision Alarm	High = TC1 Healthy										TripCircuitSupervision1	37128	DI	145	8			Hardwired if from dedicated TC relay	Y
47	33kV Feeder	ACCB	7XX	33kV Feeder Panel		Word 2	BIT 8	P521	Serial	CB Fail Alarm (TC1 – P521)	High = CB did not trip – TC1										BreakerFailPW	37129	DI	145	9	Y			Y
48	33kV Feeder	Feeder	7XX	33kV Feeder Panel		Word 2	BIT 9	P521	Serial	Pilot Communications Failed	High = Comms Failed										PilotWireFail	37130	DI	145	10	Y			
49	33kV Feeder	ACCB	7XX	33kV Feeder Panel																	OverCurrRelayCommEnb							Not required. It is internal to RTU and not used.	
50	33kV Feeder	ACCB	7XX	33kV Feeder Panel							High = Comms Healthy										OverCurrRelayCommFail	36864	DI	144	0			Internal to RTU	
51	33kV Feeder	ACCB	7XX	33kV Feeder Panel	1	S1002	4	X15:26	DI	OC & EF Relay (P127) Watchdog	Energised = Relay Healthy		1	5	20	R1S5DI/20					OverCurrentRelay	1299	DI	5	19		Y		Y
52	33kV Feeder	ACCB	7XX	33kV Feeder Panel					DI	DOC & DEF Voltage Healthy (CB Q2x closed)	Energised = Volts Present																	Not required. Watchdog will alarm anyway.	
53	33kV Feeder	ACCB	7XX	33kV Feeder Panel	1	S1002	5	X15:28	DI	DOC Trip	Energised = O/C Fault		1	5	21	R1S5DI/21					OverCurrent	1300	DI	5	20	Y	Y	Not required, except for older relays.	
54	33kV Feeder	ACCB	7XX	33kV Feeder Panel		Word 1	BIT 0	P127	Serial	DOC Trip Alarm (A-phase)	High = O/C Fault										OverCurrentA	36865	DI	144	1	Y		Could be OverCurrent or DirOverCurr	
55	33kV Feeder	ACCB	7XX	33kV Feeder Panel		Word 1	BIT 1	P127	Serial	DOC Trip Alarm (B-phase)	High = O/C Fault										OverCurrentB	36866	DI	144	2	Y			
56	33kV Feeder	ACCB	7XX	33kV Feeder Panel		Word 1	BIT 2	P127	Serial	DOC Trip Alarm (C-phase)	High = O/C Fault										OverCurrentC	36867	DI	144	3	Y			
57	33kV Feeder	ACCB	7XX	33kV Feeder Panel		Word 1	BIT 3	P127	Serial	DOC Trip Alarm (AB-phase)	High = O/C Fault										OverCurrentAB	36868	DI	144	4	Y			
58	33kV Feeder	ACCB	7XX	33kV Feeder Panel		Word 1	BIT 4	P127	Serial	DOC Trip Alarm (AC-phase)	High = O/C Fault										OverCurrentAC	36869	DI	144	5	Y			
59	33kV Feeder	ACCB	7XX	33kV Feeder Panel		Word 1	BIT 5	P127	Serial	DOC Trip Alarm (BC-phase)	High = O/C Fault										OverCurrentBC	36870	DI	144	6	Y			
60	33kV Feeder	ACCB	7XX	33kV Feeder Panel		Word 1	BIT 6	P127	Serial	DOC Trip Alarm (ABC-phase)	High = O/C Fault										OverCurrentABC	36871	DI	144	7	Y			
61	33kV Feeder	ACCB	7XX	33kV Feeder Panel		Word 1	BIT 7	P127	Serial	DEF Trip Alarm	High = Earth Fault										OverCurEarthLeakTrip	36872	DI	144	8	Y			
62	33kV Feeder	ACCB	7XX	33kV Feeder Panel				P127	Serial	Trip Circuit 1 Supervision Alarm	High = TC1 Healthy										TripCircuitSupervision1							Not required. Monitored by p521	
63	33kV Feeder	ACCB	7XX	33kV Feeder Panel		Word 1	BIT 8	P127	Serial	Trip Circuit 2 Supervision Alarm	High = TC2 Healthy										TripCircuitSupervision2	36873	DI	144	9			Hardwired if from dedicated TC relay	Y
64	33kV Feeder	ACCB	7XX	33kV Feeder Panel		Word 3	BIT 9	P127	Serial	CB Fail Alarm (TC2 – P127)	High = CB did not trip – TC2										BreakerFailOC	36874	DI	144	10	Y			Y
65	33kV Feeder	ACCB	7XX	33kV Feeder Panel	1	S1005	1	Intertrip relay	DI	Aux Supply Failed (mrtp03)	Energised = Failed		1	5	22						InterTripRelayFail	1301	DI	5	21		Y	Only required for bulk supply points. From relay in pilot wire protection panel	
66	33kV Feeder	ACCB	7XX	33kV Feeder Panel	1	S1005	2	Intertrip relay	DI	PW Intertrip Relay Failed	Energised = Failed		1	5	23						InterTripRelayFail	1302	DI	5	22		Y	Only required for bulk supply points. From relay in pilot wire protection panel	
67	33kV Feeder	ACCB	7XX	33kV Feeder Panel	1	S1005	3	Intertrip relay	DI	Intertrip Received (srr)	Energised = Received		1	5	24						InterTripReceive	1303	DI	5	23	Y	Y	Only required for bulk supply points. From relay in pilot wire protection panel	
68	33kV Feeder	ACCB	7XX	33kV Feeder Pane	1	S1005	4	Intertrip relay	DI	Intertrip Send	Energised = Sent		1	5	25						InterTripSenc	1304	DI	5	24	Y	Y	Only required for bulk supply points. From relay in pilot wire protection pan	
69	33kV Bus Section	ACCB	33KV 1-2 BS	33kV Bus Section Panel	1	S1006	1	X15:1		Control +ve						R1S10DO/CH4-a											Y		Y
70	33kV Bus Section	ACCB	33KV 1-2 BS	33kV Bus Section Panel	1	S1006	2	X15:3	PO	Remote Close Command			1	10	4	R1S10DO/CH4-b					Close	2563	PO	10	3		Y		Y
71	33kV Bus Section	ACCB	33KV 1-2 BS	33kV Bus Section Panel	1	S1006	3	X15:2		Control +ve						R1S10DO/CH3-a											Y		Y
72	33kV Bus Section	ACCB	33KV 1-2 BS	33kV Bus Section Panel	1	S1006	4	X15:4	PO	Remote Open Command			1	10	3	R1S10DO/CH3-b					Open	2562	PO	10	2		Y		Y
73	33kV Bus Section	ACCB	33KV 1-2 BS	33kV Bus Section Panel	1	S1007	1	X15:8	DI	ACCB Open	Energised = CB Open		1	5	26	R1S5DI/26					Status(1)	1305	DI	5	25		Y		Y
74	33kV Bus Section	ACCB	33KV 1-2 BS	33kV Bus Section Panel	1	S1007	2	X15:9	DI	ACCB Closed	Energised = CB Closed		1	5	27	R1S5DI/27					Status(0)	1306	DI	5	26		Y		Y
75	33kV Bus Section	Switch	33KV 1-2 BS ISOL	33kV Bus Section Panel	1	S1007	3	X15:10	DI	Disconnector Open	Energised = DISC Open		1	5	28	R1S5DI/28					Status(1)	1307	DI	5	27		Y		Y
76	33kV Bus Section	Switch	33KV 1-2 BS ISOL	33kV Bus Section Panel	1	S1007	4	X15:11	DI	Disconnector Closed	Energised = DISC Closed		1	5	29	R1S5DI/29					Status(0)	1308	DI	5	28		Y		Y
77	33kV Bus Section	Switch	33KV 1-2 BS EARTH	33kV Bus Section Panel	1	S1007	5	X15:12	DI	Earth Switch Open	Energised = ES Open		1	5	30	R1S5DI/30					Status(1)	1309	DI	5	29		Y		Y
78	33kV Bus Section	Switch	33KV 1-2 BS EARTH	33kV Bus Section Panel	1	S1007	6	X15:14	DI	Earth Switch Closed	Energised = ES Closed		1	5	31	R1S5DI/31					Status(0)	1310	DI	5	30		Y		Y
79	33kV Bus Section	ACCB	33KV 1-2 BS	33kV Bus Section Panel	1	S1007	7	X15:16	DI	CB Motor Spring Charged	Energised = Charged		1	5	32	R1S5DI/32					SpringCharged	1311	DI	5	31		Y	Add delay at Master Station if this comes up while charging	Y
80	33kV Bus Section	ACCB	33KV 1-2 BS	33kV Bus Section Panel	1				DI	Spring Charging	Energised = Charging																	Not required. Already have Spring Charged	
81	33kV Bus Section	ACCB	33KV 1-2 BS	33kV Bus Section Panel	1	S1019	6	X15:17	DI	Trip Circuit 1 Supervision Alarm	Energised = TC1 Healthy		1	6	1	R1S6DI/1					TripCircuitSupervision1	1536	DI	6	0		Y	Required for dedicated TC relays	Y
82	33kV Bus Section	ACCB	33KV 1-2 BS	33kV Bus Section Panel	1	S1019	7	X15:18	DI	Trip Circuit 2 Supervision Alarm	Energised = TC2 Healthy		1	6	2	R1S6DI/2					TripCircuitSupervision2	1537	DI	6	1		Y	Required for dedicated TC relays	Y
83	33kV Bus Section	ACCB	33KV 1-2 BS	33kV Bus Section Panel	1	S1020	1		DI	Low Gas	Energised = Gas Level OK		1	6	3	R1S6DI/3					Low Gas	1538	DI	6	2		Y	For outdoor SF6 switchgear	
84	33kV Bus Section	ACCB	33KV 1-2 BS	33kV Bus Section Panel	1	S1020	2		DI	Low Gas Lockout	Energised = Locked out		1	6	4	R1S6DI/4					Low Gas L/O	1539	DI	6	3	Y	Y	For outdoor SF6 switchgear	
85	33kV Bus Section	ACCB	33KV 1-2 BS	33kV Bus Section Panel	1	S1020	3		DI	Motor Trouble	Energised = Motor Healthy		1	6	5	R1S6DI/5					Motor Trouble	1540	DI	6	4		Y	For outdoor SF6 switchgear. Switchgear dependent	
86	33kV Bus Section	ACCB	33KV 1-2 BS	33kV Bus Section Panel	1	S1008	8		DI	Circuit Earthed	Energised = Earthed		1	6	6	R1S6DI/6					CircuitEarthed	1541	DI	6	5		Y	Not required as switches give necessary information	
87	33kV Bus Section	ACCB	33KV 1-2 BS	33kV Bus Section Panel	1	S1008	9	X15:19	DI	ILIS Trip	Energised = Trip		1	6	7	R1S6DI/7					ILISTrip	1542	DI	6	6	Y	Y		
88	33kV Bus Section	ACCB	33KV 1-2 BS	33kV Bus Section Panel	1	S1008	10	X15:20	DI	ILIS Fault	Energised = Healthy		1	6	8	R1S6DI/8					ILISFault	1543	DI	6	7		Y		
89	33kV Bus Section	ACCB	33KV 1-2 BS	33kV Bus Section Panel		S1008	11		DI	Cable Diff Trip Alarm (A-Phase)	Energised = Diff Fault		1	6	9	R1S6DI/9					DifferentialTripA	1544	DI	6	8	Y	Y	Diff is usually MCAG34 relay + P127 for BSPs	
90	33kV Bus Section	ACCB	33KV 1-2 BS	33kV Bus Section Panel		S1008	12		DI	Cable Diff Trip Alarm (B-Phase)	Energised = Diff Fault		1	6	10	R1S6DI/10					DifferentialTripB	1545	DI	6	9	Y	Y		
91	33kV Bus Section	ACCB	33KV 1-2 BS	33kV Bus Section Panel		S1008	13		DI	Cable Diff Trip Alarm (C-Phase)	Energised = Diff Fault		1	6	11	R1S6DI/11					DifferentialTripC	1546	DI	6	10	Y	Y		
92	33kV Bus Section	ACCB	33KV 1-2 BS	33kV Bus Section Panel	1	S1008	14	X15:24	DI	Cable Diff Relay (P127) Watchdog	Energised = Relay Healthy		1	6	12	R1S6DI/12					DiffRelayFail	1547	DI	6	11		Y	Required for Bus Tie CBs	Y
93	33kV Bus Section	ACCB	33KV 1-2 BS	33kV Bus Section Panel																	DiffRelayCommEnb							Not required. It is internal to RTU and not used.	
94	33kV Bus Section	ACCB	33KV 1-2 BS	33kV Bus Section Panel							High = Comms Healthy										DiffRelayCommFail	32768	DI	128	0			Internal to RTU	
95	33kV Bus Section	ACCB	33KV 1-2 BS	33kV Bus Section Panel		Word 4	BIT 0	P127	Serial	Cable Diff Trip Alarm	High = Diff Fault										DifferentialTrip	32769	DI	128	1	Y			
96	33kV Bus Section	ACCB	33KV 1-2 BS	33kV Bus Section Panel		Word 4	BIT 1	P127	Serial	Trip Circuit 1 Supervision Alarm (TC1)	High = TC1 Healthy										TripCircuitSupervision1	32770	DI	128	2			Hardwired if from dedicated TC relay	Y
97	33kV Bus Section	ACCB	33KV 1-2 BS	33kV Bus Section Panel		Word 4	BIT 2	P127	Serial	CB Fail Alarm (TC1 - P127)	High = CB did not trip										DiffBreakerFail	32771	DI	128	3	Y			
98	33kV Bus Section	ACCB	33KV 1-2 BS	33kV Bus Section Panel	1	S1020	1		DI	Over Current Relay	High = Relay Healthy		1	6	13	R1S6DI/13					OverCurrentRelay	1548	DI	6	12		Y	OC relay may exist for outdoor CBs	Y
99	33kV Bus Section	ACCB	33KV 1-2 BS	33kV Bus Section Panel																	OverCurrRelayCommEnb							Not required. It is internal to RTU and not used.	
100	33kV Bus Section	ACCB	33KV 1-2 BS	33kV Bus Section Panel							High = Comms Healthy										OverCurrRelayCommFail	33024	DI	129	0			Internal to RTU	
101	33kV Bus Section	ACCB	33KV 1-2 BS	33kV Bus Section Panel		Word 5	BIT 0		Serial	OC Trip Alarm (A-phase)	High = O/C Fault										OverCurrentA	33025	DI	129	1	Y		OC relay may exist for outdoor CBs	
102	33kV Bus Section	ACCB	33KV 1-2 BS	33kV Bus Section Panel		Word 5	BIT 1		Serial	OC Trip Alarm (B-phase)	High = O/C Fault										OverCurrentB	33026	DI	129	2	Y		OC relay may exist for outdoor CBs	
103	33kV Bus Section	ACCB	33KV 1-2 BS	33kV Bus Section Panel		Word 5	BIT 2		Serial	OC Trip Alarm (C-phase)	High = O/C Fault										OverCurrentC	33027	DI	129	3	Y		OC relay may exist for outdoor CBs	
104	33kV Bus Section	ACCB	33KV 1-2 BS	33kV Bus Section Panel		Word 5	BIT 3		Serial	OC Trip Alarm (AB-phase)	High = O/C Fault										OverCurrentAB	33028	DI	129	4	Y		OC relay may exist for outdoor CBs	
105	33kV Bus Section	ACCB	33KV 1-2 BS	33kV Bus Section Panel		Word 5	BIT 4		Serial	OC Trip Alarm (AC-phase)	High = O/C Fault										OverCurrentAC	33029	DI	129	5	Y		OC relay may exist for outdoor CBs	
106	33kV Bus Section	ACCB	33KV 1-2 BS	33kV Bus Section Panel		Word 5	BIT 5		Serial	OC Trip Alarm (BC-phase)	High = O/C Fault										OverCurrentBC	33030	DI	129	6	Y		OC relay may exist for outdoor CBs	
107	33kV Bus Section	ACCB	33KV 1-2 BS	33kV Bus Section Panel		Word 5	BIT 6		Serial	OC Trip Alarm (ABC-phase)	High = O/C Fault										OverCurrentABC	33031	DI	129	7	Y		OC relay may exist for outdoor CBs	
108	33kV Bus Section	ACCB	33KV 1-2 BS	33kV Bus Section Panel		Word 5	BIT 7		Serial	Trip Circuit 2 Supervision Alarm (TC2)	High = TC2 Healthy										TripCircuitSupervision2	33032	DI	129	8			Hardwired if from dedicated TC relay	Y
109	33kV Bus Section	ACCB	33KV 1-2 BS	33kV Bus Section Pane		Word 5	BIT 8		Serial	CB Fail Alarm (TC2	High = CB did not trip										BreakerFailOC	33033	DI	129	9	Y		OC relay may exist for outdoor CB	
110	Bus Zone/Section	DigitalEquip	BS1 IGIS ALARM	33kV Bus Section Panel	1	S1019	3	X15:28	DI	IGIS PRE-Warning Alarm – BUS 1 (P200)	Energised = Healthy		1	6	11	R1S6DI/11					DigStatus	1546	DI	6	10		Y	From either Bus Section or Feeder ACCB		IGIS indications are for indoor WSA switchgear
111	Bus Zone/Section	DigitalEquip	BS1 IGIS WARN	33kV Bus Section Panel	1	S1019	4	X15:30	DI	IGIS Warning Alarm – BUS 1 (P200)	Energised = Healthy		1	6	12	R1S6DI/12					DigStatus	1547	DI	6	11		Y	From either Bus Section or Feeder ACCB		IGIS indications are for indoor WSA switchgear
112	Bus Zone/Section	DigitalEquip	BS1 IGIS FAULT	33kV Bus Section Panel	1	S1019	5	X15:33	DI	IGIS Fault – BUS 1 (P200)	Energised = Fault		1	6	13	R1S6DI/13					DigStatus	1548	DI	6	12	Y	Y	From either Bus Section or Feeder ACCB		IGIS indications are for indoor WSA switchgear
113	Bus Zone/Section	DigitalEquip	BZ1 PROT SUPPLY	33kV Bus Section Panel	1	S1019	10	X15:27	DI	Busbar Protection Supply (k10)	Energised = Supply Healthy		1	6	14	R1S6DI/14					DigStatus	1549	DI	6	13		Y	From either Bus Section or Feeder ACCB		
114	Bus Zone/Section	DigitalEquip	NO1 33KV BS L/O	33kV Bus Section Panel	1	S1019	1	X15:26	DI	Busbar Protection MTM Trip (k86b)	Energised = Fault		1	6	15	R1S6DI/15					DigStatus	1550	DI	6	14	Y	Y	From either Bus Section or Feeder ACCB		Also called BZ1 Lockout
115	Bus Zone/Section	ACCB	33KV 1-2 BS	33kV Bus Section Panel	1	S1019	2		DI	MTA																		Not required, since it's reset automatically	
116	Bus Zone/Section	ACCB	33KV 1-2 BS	33kV Bus Section Pane	1	S4017	20		DI	Cable Differential Protection MTM	Energised = CB locked out		1	6	16	R1S6DI/16		

UPDATED BY TRUNKED SUBMISSION

Not required
Conditional

I/O No.	SCADA Equipment Name	Plant	Desig	From (Field Equipment Name)	Battery	Cable No	Core No	Field Device Terminal	Signal Type	Signal Description	Signal Status	CT or VT Ratio	RTU Rack	RTU Slot	RTU Chan	Terminal	DCCB Ctrl Bus	Pos Alarm Bus	Neg Alarm Bus	Loop	Master Station Mosaic Quantity (Point)	Master Station DNP Index	Master Station Type	Master Station Slot	Master Station Chan	Master Station Invert	Hard wired	Comment	Required by Standard
133	Rectifier ACCB	ACCB	R1	Rectifier ACCB Panel	1	S1011	9	X15:67	DI	ILIS Fault	Energised = Healthy		1	6	28	R1S6DI/28					ILISFault	1563	DI	6	27		Y		
134	Rectifier ACCB	ACCB	R1	Rectifier ACCB Panel	1	IA030	W	X3:1	AI	B Phase AC Current +ve	0-10 mA = 0 – 300A	300/1A	1	5	35	R1S5AI/CH35 +					Current	1314	AI	5	34		Y	Transducer is 1A/10mA	Y
135	Rectifier ACCB	ACCB	R1	Rectifier ACCB Panel	1	IA030	B	X3:4		B Phase AC Current -ve			1	5	35	R1S5AI/CH35 -											Y		Y
136	Rectifier ACCB	ACCB	R1	Rectifier ACCB Panel	1	IA030	S			Screen																	Y		Y
137	Rectifier ACCB	ACCB	R1							Sum of all Rectifier currents	0 - 300A										ACCurrentSum	34048	AI	133	0			Internal RTU calculation	
138	Rectifier ACCB	ACCB	R1	Rectifier ACCB Panel	1	S1020	1		DI	Low Gas	Energised = Gas Level OK		1	6	29	R1S6DI/29					Low Gas	1564	DI	6	28		Y	For outdoor SF6 switchgear	
139	Rectifier ACCB	ACCB	R1	Rectifier ACCB Panel	1	S1020	2		DI	Low Gas Lockout	Energised = Locked out		1	6	30	R1S6DI/30					Low Gas L/O	1565	DI	6	29	Y	Y	For outdoor SF6 switchgear	
140	Rectifier ACCB	ACCB	R1	Rectifier ACCB Panel	1	S1020	3		DI	Motor Trouble	Energised = Motor Healthy		1	6	31	R1S6DI/31					Motor Trouble	1566	DI	6	30		Y	For outdoor SF6 switchgear. Switchgear dependent	
141	Rectifier ACCB	DigitalEquip	R1 PROT AUX SUPPLY		1	S1015	6	X15:78	DI	Primary Protection (P124) Aux Supply Failed	Energised = MCB Closed		1	6	32	R1S6DI/32					DigStatus	1567	DI	6	31		Y	Required if supplied from AC Aux not if self powered	
142	Rectifier ACCB	ACCB	R1	Rectifier ACCB Panel	1	S1012	1	X15:26	DI	OC & EF Relay (P124) Watchdog (Primary)	Energised = Relay Healthy		1	7	1	R1S7DI/1					OverCurrentRelay	1792	DI	7	0		Y		Y
143	Rectifier ACCB	ACCB	R1	Rectifier ACCB Panel																	OverCurrRelayCommEnb							Not required. It is internal to RTU and not used.	
144	Rectifier ACCB	ACCB	R1	Rectifier ACCB Panel							High = Comms Healthy										OverCurrRelayCommFail	34304	DI	134	0			Internal to RTU	
145	Rectifier ACCB	ACCB	R1	Rectifier ACCB Panel		WORD-5	BIT 0	P124	Serial	Primary Prot Trip Alarm (A-Phase)	High = Fault										InstOverCurrentA	34305	DI	134	1	Y			
146	Rectifier ACCB	ACCB	R1	Rectifier ACCB Panel		WORD-5	BIT 1	P124	Serial	Primary Prot Trip Alarm (B-Phase)	High = Fault										InstOverCurrentB	34306	DI	134	2	Y			
147	Rectifier ACCB	ACCB	R1	Rectifier ACCB Panel		WORD-5	BIT 2	P124	Serial	Primary Prot Trip Alarm (C-Phase)	High = Fault										InstOverCurrentC	34307	DI	134	3	Y			
148	Rectifier ACCB	ACCB	R1	Rectifier ACCB Panel		WORD-5	BIT 3	P124	Serial	Primary Prot Trip Alarm (AB-Phase)	High = Fault										InstOverCurrentAB	34308	DI	134	4	Y			
149	Rectifier ACCB	ACCB	R1	Rectifier ACCB Panel		WORD-5	BIT 4	P124	Serial	Primary Prot Trip Alarm (AC-Phase)	High = Fault										InstOverCurrentAC	34309	DI	134	5	Y			
150	Rectifier ACCB	ACCB	R1	Rectifier ACCB Panel		WORD-5	BIT 5	P124	Serial	Primary Prot Trip Alarm (BC-Phase)	High = Fault										InstOverCurrentBC	34310	DI	134	6	Y			
151	Rectifier ACCB	ACCB	R1	Rectifier ACCB Panel		WORD-5	BIT 6	P124	Serial	Primary Prot Trip Alarm (ABC-Phase)	High = Fault										InstOverCurrentABC	34311	DI	134	7	Y			
152	Rectifier ACCB	ACCB	R1	Rectifier ACCB Panel		WORD-5	BIT 7	P124	Serial	Primary Prot Trip Alarm (Earth fault)	High = Fault										InstEarthLeakage	34312	DI	134	8	Y			
153	Rectifier ACCB	ACCB	R1	Rectifier ACCB Panel		WORD-5	BIT 8	P124	Serial	Trip Circuit 1 Supervision Alarm	High = TC1 Healthy										TripCircuitSupervision1	34313	DI	134	9			Hardwired if from dedicated TC relay	Y
154	Rectifier ACCB	ACCB	R1	Rectifier ACCB Panel		WORD-5	BIT 9	P124	Serial	CB Fail Alarm (TC1 – P124)	High = CB did not trip – TC1										BreakerFailOC	34314	DI	134	10	Y			Y
155	Rectifier ACCB	ACCB	R1	Rectifier ACCB Panel	1	S1027	3		DI	Primary Trip																Y	Y	Not required	
156	Rectifier ACCB	ACCB	R1	Rectifier ACCB Panel	1	S1027	4		DI	Backup Trip																Y	Y	Not required	
157	Rectifier ACCB	ACCB	R1	Rectifier ACCB Panel	1	S1005	2	X15:26	DI	Protection Relay (P127) Watchdog (Backup)	Energised = Relay Healthy		1	7	2	R1S7DI/2					InstOverCurrentRelay	1793	DI	7	1		Y		Y
158	Rectifier ACCB	ACCB	R1	Rectifier ACCB Panel																	OverCurrRelayCommEnb							Not required. It is internal to RTU and not used.	
159	Rectifier ACCB	ACCB	R1	Rectifier ACCB Panel							High = Comms Healthy										OverCurrRelayCommFail	33280	DI	130	0			Internal to RTU	
160	Rectifier ACCB	ACCB	R1	Rectifier ACCB Panel		WORD-6	BIT 0	P127	Serial	Backup Prot Trip Alarm (A-phase)	High = Fault										OverCurrentA	33281	DI	130	1	Y			
161	Rectifier ACCB	ACCB	R1	Rectifier ACCB Panel		WORD-6	BIT 1	P127	Serial	Backup Prot Trip Alarm (B-phase)	High = Fault										OverCurrentB	33282	DI	130	2	Y			
162	Rectifier ACCB	ACCB	R1	Rectifier ACCB Panel		WORD-6	BIT 2	P127	Serial	Backup Prot Trip Alarm (C-phase)	High = Fault										OverCurrentC	33283	DI	130	3	Y			
163	Rectifier ACCB	ACCB	R1	Rectifier ACCB Panel		WORD-6	BIT 3	P127	Serial	Backup Prot Trip Alarm (AB-phase)	High = Fault										OverCurrentAB	33284	DI	130	4	Y			
164	Rectifier ACCB	ACCB	R1	Rectifier ACCB Panel		WORD-6	BIT 4	P127	Serial	Backup Prot Trip Alarm (AC-phase)	High = Fault										OverCurrentAC	33285	DI	130	5	Y			
165	Rectifier ACCB	ACCB	R1	Rectifier ACCB Panel		WORD-6	BIT 5	P127	Serial	Backup Prot Trip Alarm (BC-phase)	High = Fault										OverCurrentBC	33286	DI	130	6	Y			
166	Rectifier ACCB	ACCB	R1	Rectifier ACCB Panel		WORD-6	BIT 6	P127	Serial	Backup Prot Trip Alarm (ABC-phase)	High = Fault										OverCurrentABC	33287	DI	130	7	Y			
167	Rectifier ACCB	ACCB	R1	Rectifier ACCB Panel		WORD-6	BIT 7	P127	Serial	Backup Prot Trip Alarm (Earth fault)	High = Fault										EarthFault	33288	DI	130	8	Y			
168	Rectifier ACCB	ACCB	R1	Rectifier ACCB Panel		WORD-6	BIT 8	P127	Serial	Trip Circuit 2 Supervision Alarm	High = TC2 Healthy										TripCircuitSupervision2	33289	DI	130	9			Hardwired if from dedicated TC relay	Y
169	Rectifier ACCB	ACCB	R1	Rectifier ACCB Pane		WORD-6	BIT 8	P127	Serial	CB FAIL Alarm (TC2 – P127)	High = CB did not trip – TC2										BreakerFai	33290	DI	130	10	Y			Y
170	Rectifier	Rectifier	R1	Rectifier No. 1	1	IA093	W		AI	Rectifier No.1 Top (Exit) Air Temp +ve	0-20 mA = 0 – 80°c		1	6	33	R1S8AI/CH33 +					RectTopTemp	1568	AI	6	32		Y		
171	Rectifier	Rectifier	R1	Rectifier No. 1	1	IA093	B			Rectifier No.1 Top (Exit) Air Temp -ve						R1S8AI/CH33 -											Y		
172	Rectifier	Rectifier	R1	Rectifier No. 1	1	IA093	S			Screen																	Y		
173	Rectifier	Rectifier	R1	Rectifier No. 1	1	IA092	W		AI	Rectifier No.1 Bottom (Entry) Air Temp +ve	0-20 mA = 0 – 80°c		1	6	34	R1S6AI/CH34 +					RectBottomTemp	1569	AI	6	33		Y		
174	Rectifier	Rectifier	R1	Rectifier No. 1	1	IA092	B			Rectifier No.1 Bottom (Entry) Air Temp -ve						R1S6AI/CH34 -											Y		
175	Rectifier	Rectifier	R1	Rectifier No. 1	1	IA092	S			Screen																	Y		
176	Rectifier	Rectifier	R1	Rectifier No. 1	1	IA091	W		AI	Transformer Winding Temp +ve	0-20 mA = 0 - 150°C		1	6	35	R1S6AI/CH35 +					TXHotSpotTemp	1570	AI	6	34		Y		
177	Rectifier	Rectifier	R1	Rectifier No. 1	1	IA091	B			Transformer Winding Temp -ve						R1S6AI/CH35 -											Y		
178	Rectifier	Rectifier	R1	Rectifier No. 1	1	IA091	S			Screen																	Y		
179	Rectifier	Rectifier	R1	Rectifier No. 1	1	IA090	W		AI	Transformer Oil Temp +ve	0-20 mA = 0 - 150°C		1	6	36	R1S6AI/CH36 +					TXTopOilTemp	1571	AI	6	35		Y		
180	Rectifier	Rectifier	R1	Rectifier No. 1	1	IA090	B			Transformer Oil Temp -ve						R1S6AI/CH36 -											Y		
181	Rectifier	Rectifier	R1	Rectifier No. 1	1	IA090	S			Screen																	Y		
182	Rectifier	Rectifier	R1	Rectifier No. 1	1	S1015	10		DI	Rectifier Tx Frame Leakage (k64fl)	Energised = Fault		1	7	3	R1S7DI/3						1794	DI	7	2	Y	Y	Only for Rect Tx with a roof	
183	Rectifier	Rectifier	R1	Rectifier No. 1	1	S1034	9		DI	Winding Temp Critical Alarm	Energised = Passed Critical Temp		1	7	4	R1S7DI/4					TXWdgTempCritical	1795	DI	7	3	Y	Y		Y
184	Rectifier	Rectifier	R1	Rectifier No. 1	1	S1034	10		DI	Oil Temp Critical Alarm	Energised = Passed Critical Temp		1	7	5	R1S7DI/5					TXOilTempCritical	1796	DI	7	4	Y	Y		Y
185	Rectifier	Rectifier	R1	Rectifier No. 1	1	S1034	11		DI	Pressure	Energised = Over Pressure Fault										Pressure					Y	Y	Not required as it comes from PLC. See EL0476613	
186	Rectifier	Rectifier	R1	Rectifier No. 1	1	S1034	12		DI	Winding Temp Alarm	Energised = Passed Lower Temp		1	7	7	R1S7DI/7					TXWdgTempAlarm	1798	DI	7	6	Y	Y		Y
187	Rectifier	Rectifier	R1	Rectifier No. 1	1	S1034	13		DI	Oil Temp Alarm	Energised = Passed Lower Temp		1	7	8	R1S7DI/8					TXOilTempAlarm	1799	DI	7	7	Y	Y		Y
188	Rectifier	Rectifier	R1	Rectifier No. 1	1	S1034	14		DI	Main Tank High Oil	Energised = Oil Not High Level		1	7	9	R1S7DI/9					TXMainOilHigh	1800	DI	7	8		Y		
189	Rectifier	Rectifier	R1	Rectifier No. 1	1	S1034	15		DI	Main Tank Low Oil	Energised = Oil Not Low Level		1	7	10	R1S7DI/10					TXMainOilLow	1801	DI	7	9		Y		
190	Rectifier	Rectifier	R1	Rectifier No. 1																	PLCCommsEnabled							Not required. It is internal to RTU and not used.	
191	Rectifier	Rectifier	R1	Rectifier No. 1							High = Comms Healthy										PLCCommsFail	38144	DI	149	0			Internal to RTU	
192	Rectifier	Rectifier	R1	Rectifier No. 1	1	S1015	7	X15:73	DI	PLC Fault (K97)	Energised = Fault		1	7	11	R1S7DI/11					PLCFault	1802	DI	7	10		Y		
193	Rectifier	Rectifier	R1	Rectifier No. 1		Modbus 10	BIT 0	PLC	Serial	Buchholz Oil Trip	High = Buchholz Oil Fault										BuchholzOil	38145	DI	149	1	Y		For oil filled transformers	
194	Rectifier	Rectifier	R1	Rectifier No. 2		Word 7	BIT 1	PLC	Serial	Buchholz Gas Trip	High = Buchhoz Gas Fault										BuchholzGas	38146	DI	149	2	Y		For oil filled transformers	
195	Rectifier	Rectifier	R1	Rectifier No. 1		Word 7	BIT 2	PLC	Serial	Rectifier Tx Over Pressure	High = Over Pressure Fault										Pressure	38147	DI	149	3	Y			Y
196	Rectifier	Rectifier	R1	Rectifier No. 1		Word 7	BIT 3	PLC	Serial	DC Reverse Current	High = Rev Curr Fault										ReverseCurrent	38148	DI	149	4	Y			
197	Rectifier	Rectifier	R1	Rectifier No. 1		Word 7	BIT 4	PLC	Serial	Rectifier frame leakage	High = Frame Leak Fault										FrameLeakage	38149	DI	149	5	Y			
198	Rectifier	Rectifier	R1	Rectifier No. 1		Word 7	BIT 5	PLC	Serial	Rectifier MTM Lockout (k86r)	High = CB locked out										Lockout	38150	DI	149	6				Y
199	Rectifier	Switch	R1 NEG ISOL	Rectifier No. 1		Word 7	BIT 6	PLC	Serial	Negative Isolator Closed	High = Neg Isol Closed										Status(0)	38151	DI	149	7				
200	Rectifier	Switch	R1 NEG ISOL	Rectifier No. 1		Word 7	BIT 7	PLC	Serial	Negative Isolator Open	High = Neg Isol Open										Status(1)							Not required. Only Close required	
201	Rectifier	Rectifier	R1	Rectifier No. 1		IA040	1W	X3:7	AI	DC Circuit Current +ve	0-20 mA = 0 – 13000A		1	7	33	R1S7AI/CH33 +					DCCurrent	1824	AI	7	32		Y		
202	Rectifier	Rectifier	R1	Rectifier No. 1		IA040	1B	X3:8		DC Circuit Current -ve			1	7	33	R1S7AI/CH33 -											Y		
203	Rectifier	Rectifier	R1	Rectifier No. 1		IA040	S			Screen																	Y		
204	Rectifier	Rectifier	R1	Rectifier No. 1		IA050	1W	X3:11	AI	DC Voltage +ve	0-20 mA = 0 – 2200v		1	7	34	R1S7AI/CH34 +					DCVoltage	1825	AI	7	33		Y		
205	Rectifier	Rectifier	R1	Rectifier No. 1		IA050	1B	X3:12		DC Voltage -ve			1	7	34	R1S7AI/CH34 -											Y		
206	Rectifier	Rectifier	R1	Rectifier No. 1		IA050	S			Screen																	Y		
207	Rectifier Tx Tap Changer	AnalogEquip	R1 TC POSITION																		AnaStatus	16896	AI	66	0			Internal to RTU. Analogue representing Tap position	
208	Rectifier Tx Tap Changer				1	S1008	1			Control +ve						R1S10DO/CH7-a											Y		
209	Rectifier Tx Tap Changer	Switch	R1		1	S1008	2		PO	Remote Raise Command			1	10	7	R1S10DO/CH7-b					Raise	2566	PO	10	6		Y		
210	Rectifier Tx Tap Changer				1					Control +ve						R1S10DO/CH7-a											Y	Not required	
211	Rectifier Tx Tap Changer	Switch	R1		1	S1008	3		PO	Remote Lower Command			1	10	8	R1S10DO/CH7-b					Lower	2567	PO	10	7		Y		
212	Rectifier Tx Tap Changer	Rectifier	R1		1	S1034	16		DI	MCB Tripped Alarm (Circuit Fail)	Energised = MCB Closed		1	7	12	R1S7DI/12					TapChangerSupply	1803	DI	7	11		Y		
213	Rectifier Tx Tap Changer	Rectifier	R1		1	S1034	1		DI	Tap Changer No.1 Motor O/L Trip	Energised = Tripped		1	7	13	R1S7DI/13					TapChangerOverload	1804	DI	7	12	Y	Y		
214	Rectifier Tx Tap Changer	DigitalEquip	R1 TC POS1		1	S1034	2		DI	Tap Changer No.1 Tap 1	Energised = On Tap 1		1	7	14	R1S7DI/14					DigStatus	1805	DI	7	13		Y		
215	Rectifier Tx Tap Changer	DigitalEquip	R1 TC POS2		1	S1034	3		DI	Tap Changer No.1 Tap 2	Energised = On Tap 2		1	7	15	R1S7DI/15					DigStatus	1806	DI	7	14		Y		
216	Rectifier Tx Tap Changer	DigitalEquip	R1 TC POS3		1	S1034	4		DI	Tap Changer No.1 Tap 3	Energised = On Tap 3		1	7	16	R1S7DI/16					DigStatus	1807	DI	7	15		Y		
217	Rectifier Tx Tap Changer	DigitalEquip	R1 TC POS4		1	S1034	5		DI	Tap Changer No.1 Tap 4	Energised = On Tap 4		1	7	17	R1S7DI/17					DigStatus	1808	DI	7	16		Y		
218	Rectifier Tx Tap Changer	DigitalEquip	R1 TC POS5		1	S1034	6		DI	Tap Changer No.1 Tap 5	Energised = On Tap 5		1	7	18	R1S7DI/18					DigStatus	1809	DI	7	17		Y		
219	Rectifier Tx Tap Changer	DigitalEquip	R1 TC POS6		1	S1034	7		DI	Tap Changer No.1 Tap 6	Energised = On Tap 6		1	7	19	R1S7DI/19					DigStatus	1810	DI	7	18		Y		
220	Rectifier Tx Tap Change	DigitalEquip	R1 TC POS7		1	S1034	8		DI	Tap Changer No.1 Tap 7	Energised = On Tap 7		1	7	20	R1S7DI/20					DigStatus	1811	DI	7	19		Y		
221	Rectifier DCCB	RDCCB	R1	Rectifier	1	S1015	8	x15:76	DI	DCCB Open	Energised = CB Open		1	7	21	R1S7DI/21					Status(1)	1812	DI	7	20		Y		
222	Rectifier DCCB	RDCCB	R1	Rectifier	1	S1015	9	x15:75	DI	DCCB Closed	Energised = CB Closed		1	7	22	R1S7DI/22					Status(0)	1813	DI	7	21		Y		
223	DC General			Common Equipment Panel	2	S1108	1		+ve	125V dc common								●											
224	DC General	DigitalEquip	DC FRAME LEAKAGE	Common Equipment Panel	2	S1108	2		DI	1500V DC Switchboard Frame Leakage Trip	Energised = F/L occurred		2	3	1	R2S3DI/1					DigStatus	3840	DI	15	0	Y	Y		
225	DC General	DigitalEquip	FRAME LEAKAGE FAULT	Common Equipment Panel	2	S1108	3		DI	Frame Leakage Relay Failed	Energised = Healthy		2	3	2	R2S3DI/2					DigStatus	3841	DI	15	1		Y		
226	DC General	DigitalEquip	FRAME LEAKAGE SUPPLY	Common Equipment Panel	2	S1108	4		DI	Frame Leakage Protection Supply Healthy	Energised = Volts Present		2	3	3	R2S3DI/3					DigStatus	3842	DI	15	2		Y		
227	DC Genera			Common Equipment Pane						Frame Leakage Bypas																	Y		
228	33/11 33kV ACCB			33kV Panel 3 33/11 Tx	1	S1005	1	X15:01		Control +ve						R1S11DO/CH2-a											Y		Y
229	33/11 33kV ACCB	ACCB	NO1 33/11 33KV	33kV Panel 3 33/11 Tx	1	S1005	2	X15:03	PO	Remote Close Command			1	11	2	R1S11DO/CH2-b					Close	2817	PO	11	1		Y		Y
230	33/11 33kV ACCB			33kV Panel 3 33/11 Tx	1	S1005	3	X15:02		Control +ve						R1S11DO/CH2-a											Y		Y
231	33/11 33kV ACCB	ACCB	NO1 33/11 33KV	33kV Panel 3 33/11 Tx	1	S1005	4	X15:04	PO	Remote Open Command			1	11	1	R1S11DO/CH2-b					Open	2816	PO	11	0		Y		Y
232	33/11 33kV ACCB	ACCB	NO1 33/11 33KV	33kV Panel 3 33/11 Tx	1	S1040	1	X15:8	DI	ACCB Open	Energised = CB Open		1	7	23	R1S7DI/23					Status(1)	1814	DI	7	22		Y		Y
233	33/11 33kV ACCB	ACCB	NO1 33/11 33KV	33kV Panel 3 33/11 Tx	1	S1040	2	X15:9	DI	ACCB Closed	Energised = CB Closed		1	7	24	R1S7DI/24					Status(0)	1815	DI	7	23		Y		Y
234	33/11 33kV ACCB	Switch	33/11 33KV ISOL	33kV Panel 3 33/11 Tx	1	S1040	3	X15:10	DI	Disconnector Open	Energised = DISC Open		1	7	25	R1S7DI/25					Status(1)	1816	DI	7	24		Y		Y
235	33/11 33kV ACCB	Switch	33/11 33KV ISOL	33kV Panel 3 33/11 Tx	1	S1040	4	X15:11	DI	Disconnector Closed	Energised = DISC Closed		1	7	26	R1S7DI/26					Status(0)	1817	DI	7	25		Y		Y
236	33/11 33kV ACCB	Switch	33/11 33KV EARTH	33kV Panel 3 33/11 Tx	1	S1040	5	X15:12	DI	Earth Switch Open	Energised = ES Open		1	7	27	R1S7DI/27					Status(1)	1818	DI	7	26		Y		Y
237	33/11 33kV ACCB	Switch	33/11 33KV EARTH	33kV Panel 3 33/11 Tx	1	S1040	6	X15:14	DI	Earth Switch Closed	Energised = ES Closed		1	7	28	R1S7DI/28					Status(0)	1819	DI	7	27		Y		Y
238	33/11 33kV ACCB	ACCB	NO1 33/11 33KV	33kV Panel 3 33/11 Tx	1	S1040	7	X15:16	DI	CB Motor Spring Charged	Energised = Charged		1	7	29	R1S7DI/29					SpringCharged	1820	DI	7	28		Y		
239	33/11 33kV ACCB	ACCB	NO1 33/11 33KV	33kV Panel 3 33/11 Tx	1	S1040	9	X15:19	DI	ILIS Trip	Energised = Trip		1	7	30	R1S7DI/30					ILISTrip	1821	DI	7	29	Y	Y		
240	33/11 33kV ACCB	ACCB	NO1 33/11 33KV	33kV Panel 3 33/11 Tx	1	S1040	8	X15:20	DI	ILIS Fault	Energised = Healthy		1	7	31	R1S7DI/31					ILISFault	1822	DI	7	30		Y		
241	33/11 33kV ACCB	ACCB	NO1 33/11 33KV	33kV Panel 3 33/11 Tx						MTM Relay Lockout											Lockout					?		Not required. This is associated with the transformer	
242	33/11 33kV ACCB	ACCB	NO1 33/11 33KV	33kV Panel 3 33/11 Tx		IA020	W	X3:1	AI	B Phase AC Current +ve	0-10 mA = 0 – 200 A	200/1A	1	7	35	R1S7AI/CH35+					Current	1826	AI	7	34		Y	Transducer is 1A/10mA	Y
243	33/11 33kV ACCB	ACCB	NO1 33/11 33KV	33kV Panel 3 33/11 Tx		IA020	B	X3:4		B Phase AC Current -ve			1	7	35	R1S7AI/CH35-											Y		
244	33/11 33kV ACCB	ACCB	NO1 33/11 33KV	33kV Panel 3 33/11 Tx		IA020	S			Screen																	Y		
245	33/11 33kV ACCB	ACCB	NO1 33/11 33KV	33kV Panel 3 33/11 Tx																	DiffRelayCommsEnb							Not required. It is internal to RTU and not used.	
246	33/11 33kV ACCB	ACCB	NO1 33/11 33KV	33kV Panel 3 33/11 Tx							High = Comms Healthy										DiffRelayCommsFail	37632	DI	147	0			Internal to RTU	
247	33/11 33kV ACCB	ACCB	NO1 33/11 33KV	33kV Panel 3 33/11 Tx	1	S1041	1	X15:25	DI	Diff Relay (P632) Watchdog	Energised = Relay Healthy		1	8	1	R1S8DI/1					DiffRelayFail	2048	DI	8	0				
248	33/11 33kV ACCB	ACCB	NO1 33/11 33KV	33kV Panel 3 33/11 Tx		WORD-14	BIT 0	P632	Serial	Tx Diff Trip Alarm	High = Fault										DifferentialProtection	37633	DI	147	1	Y			
249	33/11 33kV ACCB	ACCB	NO1 33/11 33KV	33kV Panel 3 33/11 Tx		WORD-14	BIT 1	P632	Serial	Trip Circuit 1 Supervision Alarm	High = TC1 Healthy										TripCircuitSupervision1	37634	DI	147	2			Hardwired if from dedicated TC relay.	
250	33/11 33kV ACCB	ACCB	NO1 33/11 33KV	33kV Panel 3 33/11 Tx		WORD-14	BIT 2	P632	Serial	CB FAIL Alarm (TC1 – P632)	High = CB did not trip – TC1										DiffBreakerFail	37635	DI	147	3	Y			
251	33/11 33kV ACCB	ACCB	NO1 33/11 33KV	33kV Panel 3 33/11 Tx		WORD-14	BIT 3	P632	Serial	Tap Changer Oil Pressure Switch	High = Pressure Activated										TCPressure	37639	DI	147	7	Y			
252	33/11 33kV ACCB	ACCB	NO1 33/11 33KV	33kV Panel 3 33/11 Tx		WORD-14	BIT 4	P632	Serial	Tap Changer Alarm	High = TC Fault										TCFail	37640	DI	147	8				
253	33/11 33kV ACCB	ACCB	NO1 33/11 33KV	33kV Panel 3 33/11 Tx																	OverCurrRelayCommEnb							Not required. It is internal to RTU and not used.	
254	33/11 33kV ACCB	ACCB	NO1 33/11 33KV	33kV Panel 3 33/11 Tx							High = Comms Healthy										OverCurrRelayCommFail	37376	DI	146	0			Internal to RTU	
255	33/11 33kV ACCB	ACCB	NO1 33/11 33KV	33kV Panel 3 33/11 Tx	1	S1024	1	X15:32	DI	OC Relay (P127) Watchdog	Energised = Relay Healthy		1	8	2	R1S8DI/2					OverCurrentRelay	2049	DI	8	1		Y		
256	33/11 33kV ACCB	ACCB	NO1 33/11 33KV	33kV Panel 3 33/11 Tx		Word 8	BIT 0	P127	Serial	OC Trip Alarm (A-phase)	High = O/C Fault										OverCurrentA	37377	DI	146	1	Y			
257	33/11 33kV ACCB	ACCB	NO1 33/11 33KV	33kV Panel 3 33/11 Tx		Word 8	BIT 1	P127	Serial	OC Trip Alarm (B-phase)	High = O/C Fault										OverCurrentB	37378	DI	146	2	Y			
258	33/11 33kV ACCB	ACCB	NO1 33/11 33KV	33kV Panel 3 33/11

UPDATED by Tim Lidden 11/09/2009

I/O No.	SCADA Equipment Name	Plant	Desig	From (Field Equipment Name)	Battery	Cable No	Core No	Field Device Terminal	Signal Type	Signal Description	Signal Status	CT or VT Ratio	RTU Rack	RTU Slot	RTU Chan	Terminal	DCCB Ctrl Bus	Pos Alarm Bus	Neg Alarm Bus	Loop	Master Station Mosaic Quantity (Point)	DNP Index	Type	Slot	Chan	Invert	Hard wired	Comment	Required by Standard
265	33/11 33kV ACCB	ACCB	NO1 33/11 33KV	33kV Panel 3 33/11 Tx		Word 8	BIT 9	P127	Serial	CB Fail Alarm (TC2 – P127)	High = CB did not trip – TC2										BreakerFailOC	37386	DI	146	10	Y			
266	33 or 66/11 Tx	DigitalEquip	33/11TX ALARM2	33/11kV Tx	1																DigStatus							Not required	
267	33 or 66/11 Tx	DigitalEquip	33/11TX ALARM3	33/11kV Tx	1																DigStatus							Not required	
268	33 or 66/11 Tx	DigitalEquip	33/11TX ALARM4	33/11kV Tx	1																DigStatus							Not required	
269	33 or 66/11 Tx	Transformer	NO1 33/11KV TX	33/11kV Tx	1	IA110	W		AI	Transformer Winding Temp +ve	0-20 mA = 0 - 150°C		1	8	33	R1S8AI/CH33 +					TXHotSpotTemp	2080	AI	8	32		Y		
270	33 or 66/11 Tx	Transformer	NO1 33/11KV TX	33/11kV Tx	1	IA110	B			Transformer Winding Temp -ve						R1S8AI/CH33 -												Y		
271	33 or 66/11 Tx	Transformer	NO1 33/11KV TX	33/11kV Tx	1	IA110	S			Screen																		Y		
272	33 or 66/11 Tx	Transformer	NO1 33/11KV TX	33/11kV Tx	1	IA111	W		AI	Transformer Oil Temp +ve	0-20 mA = 0 - 150°C		1	8	34	R1S8AI/CH34 +					TXTopOilTemp	2081	AI	8	33		Y		
273	33 or 66/11 Tx	Transformer	NO1 33/11KV TX	33/11kV Tx	1	IA111	B			Transformer Oil Temp -ve						R1S8AI/CH34 -												Y		
274	33 or 66/11 Tx	Transformer	NO1 33/11KV TX	33/11kV Tx	1	IA111	S			Screen																		Y		
340	33 or 66/11 Tx	Transformer	NO1 33/11KV 11kV	33/11kV Tx		IA012	W	X3:6	AI	11kV Voltage (A-C Phase) +ve	0-20 mA = 0 – 12.5 kV	11kV/110V	1	8	35	R1S8AI/CH35 +					Voltage	2082	AI	8	34		Y	Transducer is 125V/20mA	Y
341	33 or 66/11 Tx			33/11kV Tx		IA012	B	X3:7		11kV Voltage (A-C Phase) -ve			1	8	35	R1S8AI/CH35 -												Y		
342	33 or 66/11 Tx			33/11kV Tx		IA012	S	X3:8		Screen																		Y		
275	33 or 66/11 Tx	Transformer	NO1 33/11KV TX	33/11kV Tx	1	S1035	1		DI	Winding Temp Critical Alarm	Energised = Passed Critical Temp		1	8	3	R1S8DI/3					TXWdgTempCritical	2050	DI	8	2	Y	Y		Y
276	33 or 66/11 Tx	Transformer	NO1 33/11KV TX	33/11kV Tx	1	S1035	2		DI	Oil Temp Critical Alarm	Energised = Passed Critical Temp		1	8	4	R1S8DI/4					TXOilTempCritical	2051	DI	8	3	Y	Y		Y
277	33 or 66/11 Tx	Transformer	NO1 33/11KV TX	33/11kV Tx	1	S1035	3		DI	Pressure	Energised = Over Pressure Fault		1	8	5	R1S8DI/5					Pressure	2052	DI	8	4	Y	Y		
278	33 or 66/11 Tx	Transformer	NO1 33/11KV TX	33/11kV Tx	1	S1035	4		DI	Winding Temp Alarm	Energised = Passed Lower Temp		1	8	6	R1S8DI/6					TXWdgTempAlarm	2053	DI	8	5	Y	Y		Y
279	33 or 66/11 Tx	Transformer	NO1 33/11KV TX	33/11kV Tx	1	S1035	5		DI	Oil Temp Alarm	Energised = Passed Lower Temp		1	8	7	R1S8DI/7					TXOilTempAlarm	2054	DI	8	6	Y	Y		Y
280	33 or 66/11 Tx	Transformer	NO1 33/11KV TX	33/11kV Tx	1	S1035	6		DI	Main Tank High Oil	Energised = Oil Not High Level		1	8	8	R1S8DI/8					TXMainOilHigh	2055	DI	8	7		Y		
281	33 or 66/11 Tx	Transformer	NO1 33/11KV TX	33/11kV Tx	1	S1035	7		DI	Main Tank Low Oil	Energised = Oil Not Low Level		1	8	9	R1S8DI/9					TXMainOilLow	2056	DI	8	8		Y		
282	34 or 66/11 Tx	Transformer	NO1 33/11KV TX	33/11kV Tx		S1035	8		DI	Buchholz Oil Trip	Energised = Buchholz Oil Fault		1	8	10	R1S8DI/10					BuchholzOil	2057	DI	8	9	Y	Y	For oil filled transformers	
283	35 or 66/11 Tx	Transformer	NO1 33/11KV TX	33/11kV Tx		S1035	9		DI	Buchholz Gas Trip	Energised = Buchholz Gas Fault		1	8	11	R1S8DI/11					BuchholzGas	2058	DI	8	10	Y	Y	For oil filled transformers	
284	33 or 66/11 Tx	Transformer	NO1 33/11KV TX	33/11kV Tx	1	S1041	3			Primary Trip																Y	Y	Not required	
285	33 or 66/11 Tx	Transformer	NO1 33/11KV TX	33/11kV Tx	1	S1041	4			Backup Trip																Y	Y	Not required	
286	33 or 66/11 Tx	Transformer	NO1 33/11KV TX	33/11kV Tx	1	S1041	5			Supply 1 FAILED																	Y	Not required	
287	33 or 66/11 Tx	Transformer	NO1 33/11KV TX	33/11kV Tx	1	S1041	6			Supply 2 FAILED																	Y	Not required	
288	33 or 66/11 Tx	Transformer	NO1 33/11KV TX	33/11kV Tx	1	S1035	10	X15:34	DI	MTM Relay Lockout (k86t)	Energised = Locked out		1	8	12	R1S8DI/12					Lockout	2059	DI	8	11	Y	Y		
289	33 or 66/11 Tx	Transformer	NO1 33/11KV TX	33/11kV Tx	1	S1041	8	X15:33	DI	MTA Relay Trip Alarm (k96)	Energised = Trip																	Not required, since it's reset automatically	
290	33 or 66/11 Tx	Transformer	NO1 33/11KV TX	33/11kV Tx	1	S1035	11		DI	Fan Motor Running	Energised = Fan Running		1	8	13	R1S8DI/13					FanRunning	2060	DI	8	12		Y	Required for Tx's with fans	
291	33 or 66/11 Tx	Transformer	NO1 33/11KV TX	33/11kV Tx	1	S1035	12		DI	Fan Motor Fault	Energised = Fan Fault		1	8	14	R1S8DI/14					FanFail	2061	DI	8	13		Y	Required for Tx's with fans	
292	33 or 66/11 Tx	Transformer	NO1 33/11KV TX	33/11kV Tx	1					Common Fault	Energised =																	Not required	
293	33 or 66/11 Tx	Transformer	NO1 33/11KV TX	33/11kV Tx	1					Tx Oil Level High	Energised =																	Not required	
294	33 or 66/11 Tx	Transformer	NO1 33/11KV TX	33/11kV Tx	1					Tx Oil Level Low	Energised =																	Not required	
295	33 or 66/11 Tx	Transformer	NO1 33/11KV TX	33/11kV Tx	1					Tx Conservator Bag Rupture	Energised =																	Not required	
296	33 or 66/11 Tx Tap changer			Onload Tap Changer	1	S1011	1			Control +ve						R1S11DO/CH3-a										Y			
297	33 or 66/11 Tx Tap changer	Switch	NO1 33/11KV TX	Onload Tap Changer	1	S1011	2		PO	Remote Raise Command			1	11	3	R1S11DO/CH3-b					Raise	2818	PO	11	2		Y		
298	33 or 66/11 Tx Tap changer			Onload Tap Changer	1					Control +ve						R1S11DO/CH4-a										Y			
299	33 or 66/11 Tx Tap changer	Switch	NO1 33/11KV TX	Onload Tap Changer	1	S1011	3		PO	Remote Lower Command			1	11	4	R1S11DO/CH4-b					Lower	2819	PO	11	3		Y		
300	33 or 66/11 Tx Tap changer	Transformer	NO1 33/11KV TX	Onload Tap Changer	1	S1030	1		DI	Tap Changer Faulty	Energised = Fault		1	8	15	R1S8DI/15					TCFail	6926	DI	8	14	Y	Y		
301	33 or 66/11 Tx Tap changer	Transformer	NO1 33/11KV TX	Onload Tap Changer	1	S1030	2		DI	Tap Changer Limit	Energised = Within Limits		1	8	16	R1S8DI/16					TCLimit	6927	DI	8	15		Y		
302	33 or 66/11 Tx Tap changer	Transformer	NO1 33/11KV TX	Onload Tap Changer	1	S1030	3		DI	Tap Changer Winding Temp Alarm	Energised = Passed alarm temp		1	8	17	R1S8DI/17					TCWdgTemp	6928	DI	8	16	Y	Y	Trip Temp Exceeded - Via ACCB	
303	33 or 66/11 Tx Tap changer	Transformer	NO1 33/11KV TX	Onload Tap Changer	1	S1030	4		DI	Tap Changer Oil Temp Alarm	Energised = Passed alarm temp		1	8	18	R1S8DI/18					TCOilTemp	6929	DI	8	17	Y	Y	Trip Temp Exceeded - Via ACCB	
304	33 or 66/11 Tx Tap changer	Transformer	NO1 33/11KV TX	Onload Tap Changer	1	S1030	5		DI	Motor Protection CB Trip Alarm	Energised = Closed (No Fault)		1	8	19	R1S8DI/19					TCMotorCB	6930	DI	8	18		Y		
305	33 or 66/11 Tx Tap changer	Transformer	NO1 33/11KV TX	Onload Tap Changer	1	S1030	6		DI	Buchholz Oil Trip	Energised = Buchholz Oil Fault		1	8	20	R1S8DI/20					TCBuchholzOil	37639	DI	8	19	Y	Y		
306	33 or 66/11 Tx Tap changer	Transformer	NO1 33/11KV TX	Onload Tap Changer					AI	Winding Temp																		Not required	
307	33 or 66/11 Tx Tap changer	Transformer	NO1 33/11KV TX	Onload Tap Changer					AI	Oil Temp																		Not required	
308	33 or 66/11 Tx Tap changer	Transformer	NO1 33/11KV TX	Onload Tap Changer					DI	AVR Relay Healthy																		Not required	
309	33 or 66/11 Tx Tap changer	Transformer	NO1 33/11KV TX	Onload Tap Changer					DI	Tap Change In Progress																		Not required	
310	33 or 66/11 Tx Tap changer	Transformer	NO1 33/11KV TX	Onload Tap Changer					DI	TC Closed Lower Limit																		Not required	
311	33 or 66/11 Tx Tap changer	Transformer	NO1 33/11KV TX	Onload Tap Changer					DI	TC Closed Upper Limit																		Not required	
312	33 or 66/11 Tx Tap changer	Transformer	NO1 33/11KV TX	Onload Tap Changer					DI	TC Open Lower Limit																		Not required	
313	33 or 66/11 Tx Tap changer	Transformer	NO1 33/11KV TX	Onload Tap Changer					DI	TC Open Upper Limit																		Not required	
314	33 or 66/11 Tx Tap changer	Transformer	NO1 33/11KV TX	Onload Tap Changer						TC Oil Level High																		Not required	
315	33 or 66/11 Tx Tap changer	Transformer	NO1 33/11KV TX	Onload Tap Changer						TC Oil Level Low																		Not required	
316	33 or 66/11 Tx Tap changer	Transformer	NO1 33/11KV TX	Onload Tap Changer						TC Overpressure Alarm																		Not required	
317	33 or 66/11 Tx Tap changer	Transformer	NO1 33/11KV TX	Onload Tap Changer						TC Overpressure Trip																		Not required	
318	33 or 66/11 Tx Tap changer	DigitalEquip	NO1 33/11 Tx TC Pos1	Onload Tap Changer	1	S1031	1		DI	Tap Changer Position Tap 1	Energised = On Tap 1		2	4	1	R2S4DI/1					DigStatus	4096	DI	16	0		Y		
319	33 or 66/11 Tx Tap changer	DigitalEquip	NO1 33/11 Tx TC Pos2	Onload Tap Changer	1	S1031	2		DI	Tap Changer Position Tap 2	Energised = On Tap 2		2	4	2	R2S4DI/2					DigStatus	4097	DI	16	1		Y		
320	33 or 66/11 Tx Tap changer	DigitalEquip	NO1 33/11 Tx TC Pos3	Onload Tap Changer	1	S1031	3		DI	Tap Changer Position Tap 3	Energised = On Tap 3		2	4	3	R2S4DI/3					DigStatus	4098	DI	16	2		Y		
321	33 or 66/11 Tx Tap changer	DigitalEquip	NO1 33/11 Tx TC Pos4	Onload Tap Changer	1	S1031	4		DI	Tap Changer Position Tap 4	Energised = On Tap 4		2	4	4	R2S4DI/4					DigStatus	4099	DI	16	3		Y		
322	33 or 66/11 Tx Tap changer	DigitalEquip	NO1 33/11 Tx TC Pos5	Onload Tap Changer	1	S1031	5		DI	Tap Changer Position Tap 5	Energised = On Tap 5		2	4	5	R2S4DI/5					DigStatus	4100	DI	16	4		Y		
323	33 or 66/11 Tx Tap changer	DigitalEquip	NO1 33/11 Tx TC Pos6	Onload Tap Changer	1	S1031	6		DI	Tap Changer Position Tap 6	Energised = On Tap 6		2	4	6	R2S4DI/6					DigStatus	4101	DI	16	5		Y		
324	33 or 66/11 Tx Tap changer	DigitalEquip	NO1 33/11 Tx TC Pos7	Onload Tap Changer	1	S1031	7		DI	Tap Changer Position Tap 7	Energised = On Tap 7		2	4	7	R2S4DI/7					DigStatus	4102	DI	16	6		Y		
325	33 or 66/11 Tx Tap changer	DigitalEquip	NO1 33/11 Tx TC Pos8	Onload Tap Changer	1	S1031	8		DI	Tap Changer Position Tap 8	Energised = On Tap 8		2	4	8	R2S4DI/8					DigStatus	4103	DI	16	7		Y		
326	33 or 66/11 Tx Tap changer	DigitalEquip	NO1 33/11 Tx TC Pos9	Onload Tap Changer	1	S1031	9		DI	Tap Changer Position Tap 9	Energised = On Tap 9		2	4	9	R2S4DI/9					DigStatus	4104	DI	16	8		Y		
327	33 or 66/11 Tx Tap changer	DigitalEquip	NO1 33/11 Tx TC Pos10	Onload Tap Changer	1	S1031	10		DI	Tap Changer Position Tap 10	Energised = On Tap 10		2	4	10	R2S4DI/10					DigStatus	4105	DI	16	9		Y		
328	33 or 66/11 Tx Tap changer	DigitalEquip	NO1 33/11 Tx TC Pos11	Onload Tap Changer	1	S1032	1		DI	Tap Changer Position Tap 11	Energised = On Tap 11		2	4	11	R2S4DI/11					DigStatus	4106	DI	16	10		Y		
329	33 or 66/11 Tx Tap changer	DigitalEquip	NO1 33/11 Tx TC Pos12	Onload Tap Changer	1	S1032	2		DI	Tap Changer Position Tap 12	Energised = On Tap 12		2	4	12	R2S4DI/12					DigStatus	4107	DI	16	11		Y		
330	33 or 66/11 Tx Tap changer	DigitalEquip	NO1 33/11 Tx TC Pos13	Onload Tap Changer	1	S1032	3		DI	Tap Changer Position Tap 13	Energised = On Tap 13		2	4	13	R2S4DI/13					DigStatus	4108	DI	16	12		Y		
331	33 or 66/11 Tx Tap changer	DigitalEquip	NO1 33/11 Tx TC Pos14	Onload Tap Changer	1	S1032	4		DI	Tap Changer Position Tap 14	Energised = On Tap 14		2	4	14	R2S4DI/14					DigStatus	4109	DI	16	13		Y		
332	33 or 66/11 Tx Tap changer	DigitalEquip	NO1 33/11 Tx TC Pos15	Onload Tap Changer	1	S1032	5		DI	Tap Changer Position Tap 15	Energised = On Tap 15		2	4	15	R2S4DI/15					DigStatus	4110	DI	16	14		Y		
333	33 or 66/11 Tx Tap changer	DigitalEquip	NO1 33/11 Tx TC Pos16	Onload Tap Changer	1	S1032	6		DI	Tap Changer Position Tap 16	Energised = On Tap 16		2	4	16	R2S4DI/16					DigStatus	4111	DI	16	15		Y		
334	33 or 66/11 Tx Tap changer	DigitalEquip	NO1 33/11 Tx TC Pos17	Onload Tap Changer	1	S1032	7		DI	Tap Changer Position Tap 17	Energised = On Tap 17		2	4	17	R2S4DI/17					DigStatus	4112	DI	16	16		Y		
335	33 or 66/11 Tx Tap changer	DigitalEquip	NO1 33/11 Tx TC Pos18	Onload Tap Changer	1	S1032	8		DI	Tap Changer Position Tap 18	Energised = On Tap 18		2	4	18	R2S4DI/18					DigStatus	4113	DI	16	17		Y		
336	33 or 66/11 Tx Tap change	DigitalEquip	NO1 33/11 Tx TC Pos19	Onload Tap Change	1	S1032	9		DI	Tap Changer Position Tap 19	Energised = On Tap 19		2	4	19	R2S4DI/19					DigStatus	4114	DI	16	18		Y		
337	VT (110V)			33kV Feeder Panel	1	S1063	1		+VE	125V dc common								●								Y	The VT may be in the feeder panel, but the master station associates it with the bus section.	
338	VT (110V)	DigitalEquip	NO1 33kV VT MCB OFF	33kV Feeder Panel	1	S1063	2	X15:30	DI	VT MCB Closed (Directional Protection Voltage Fail)	Energised = MCCB Closed										DigStatus						Y	Not required. This will give a phase failure alarm	
339	VT (110V)	VT	NO1 33KV	33kV Feeder Panel	1	S1063	3	X15:29	DI	Phase Failure (K47)	Energised = Healthy		1	8	17	R1S8DI/17					PhaseFailure	2064	DI	8	16		Y	VT may be in feeder panel, but the master station associates it with the bus section.	Y
340	VT (110V)	VT	NO1 33KV	33kV Feeder Panel		IA010	W	X3:6	AI	Busbar Voltage (A-C Phase) +ve	0-20 mA = 0 – 37.5 kV	33kV/110V	1	8	35	R1S8AI/CH35 +					Voltage	2082	AI	8	34		Y	Transducer is 125V/20mA	Y
341	VT (110V)			33kV Feeder Panel		IA010	B	X3:7		Busbar Voltage (A-C Phase) -ve			1	8	35	R1S8AI/CH35 -											Y		
342	VT (110V)			33kV Feeder Pane		IA010	S	X3:8		Screen																	Y		
343	11kV Feeder			11kV Feeder Panel	1	S1050	1	X15:01		Control +ve					1	R1S11DO/CH6-a											Y		Y
344	11kV Feeder	ACCB	6XX	11kV Feeder Panel	1	S1050	2	X15:03	PO	Remote Close Command			1	11	6	R1S11DO/CH6-b					Close	2821	PO	11	5		Y		Y
345	11kV Feeder			11kV Feeder Panel	1	S1050	3	X15:02		Control +ve						R1S11DO/CH5-a											Y		Y
346	11kV Feeder	ACCB	6XX	11kV Feeder Panel	1	S1050	4	X15:04	PO	Remote Open Command			1	11	5	R1S11DO/CH5-b					Open	2820	PO	11	4		Y		Y
347	11kV Feeder	ACCB	6XX	11kV Feeder Panel	1	S1061	1	X15:08	DI	ACCB Open	Energised = CB Open		1	8	18	R1S8DI/18					Status(1)	2065	DI	8	17		Y		Y
348	11kV Feeder	ACCB	6XX	11kV Feeder Panel	1	S1061	2	X15:09	DI	ACCB Closed	Energised = CB Closed		1	8	19	R1S8DI/19					Status(0)	2066	DI	8	18		Y		Y
349	11kV Feeder	Switch	6XX ISOL	11kV Feeder Panel	1	S1061	3	X15:10	DI	Disconnector Open	Energised = DISC Open		1	8	20	R1S8DI/20					Status(1)	2067	DI	8	19		Y		Y
350	11kV Feeder	Switch	6XX ISOL	11kV Feeder Panel	1	S1061	4	X15:11	DI	Disconnector Closed	Energised = DISC Closed		1	8	21	R1S8DI/21					Status(0)	2068	DI	8	20		Y		Y
351	11kV Feeder	Switch	6XX EARTH	11kV Feeder Panel	1	S1061	5	X15:12	DI	Earth Switch Open	Energised = ES Open		1	8	22	R1S8DI/22					Status(1)	2069	DI	8	21		Y		Y
352	11kV Feeder	Switch	6XX EARTH	11kV Feeder Panel	1	S1061	6	X15:13	DI	Earth Switch Closed	Energised = ES Closed		1	8	23	R1S8DI/23					Status(0)	2070	DI	8	22		Y		Y
353	11kV Feeder	ACCB	6XX	11kV Feeder Panel	1	S1061	7	X15:14	DI	CB Motor Spring Charged	Energised = Charged		1	8	24	R1S8DI/24					SpringCharged	2071	DI	8	23		Y	Add delay at Master Station if this comes up while charging	Y
354	11kV Feeder	ACCB	6XX	11kV Feeder Panel		IA070	W	X3:1	AI	B Phase AC Current +ve	0-10 mA = 0 - 300 A	300/1A	1	8	36	R1S8AI/CH36+					Current	2083	AI	8	35		Y	Transducer is 1A/10mA	Y
355	11kV Feeder	ACCB	6XX	11kV Feeder Panel		IA070	B	X3:4		B Phase AC Current -ve			1	8	36	R1S8AI/CH36-											Y		Y
356	11kV Feeder	ACCB	6XX	11kV Feeder Panel		IA070	S			Screen																	Y		Y
357	11kV Feeder	ACCB	6XX	11kV Feeder Panel	1	S1070	1		DI	Low Gas Alarm	Energised =		1	8	25	R1S8DI/25					LowGas	2072	DI	8	24		Y	Required for gas CBs	Y
358	11kV Feeder	ACCB	6XX	11kV Feeder Panel	1	S1070	2		DI	Low Gas Lockout	Energised =		1	8	26	R1S8DI/26					LowGasLockout	2073	DI	8	25	Y	Y	Required for gas CBs	Y
359	11kV Feeder	ACCB	6XX	11kV Feeder Panel	1	S1070	3		DI	Motor Fault	Energised = Motor Healthy		1	8	27	R1S8DI/27					MotorTrouble	2074	DI	8	26		Y	Required for gas CBs	Y
360	11kV Feeder	ACCB	6XX	11kV Feeder Panel	1	S1070	4		DI	Motor Protection CB Trip Alarm	Energised =		1	8	28	R1S8DI/28					MotorSupply	2075	DI	8	27		Y	Required for gas CBs	Y
361	11kV Feeder	Switch	6XX EARTH	11kV Feeder Panel	1	S1061	11	X15:18	DI	Disconnector Earthed	Energised = Disc Earthed		1	8	29	R1S8DI/29					Status (2)	2076	DI	8	28		Y	Only required for 3 position switches	
362	11kV Feeder	ACCB	6XX	11kV Feeder Panel	1	S1061	8	X15:15	DI	PW Relay (P521) Watchdog	Energised = Relay Healthy		1	8	30	R1S8DI/30						2077	DI	8	29		Y	Protection scheme may prescribe this	Y
363	11kV Feeder	ACCB	6XX	11kV Feeder Panel	1	S1061	9	X15:16	DI	OC & EF Relay (P127) Watchdog	Energised = Relay Healthy		1	8	31	R1S8DI/31						2078	DI	8	30		Y	Protection scheme may prescribe this	Y
364	11kV Feeder	ACCB	6XX	11kV Feeder Panel	1	S1061	10	X15:17	DI	DOC & DEF Voltage Healthy (CB Q2x closed)	Energised = Volts Present		1	8	32	R1S8DI/32					DirProtVolts	2079	DI	8	31		Y		
365	11kV Feeder	ACCB	6XX	11kV Feeder Panel	1				DI	ILIS Trip																Y		Not required	
366	11kV Feeder	ACCB	6XX	11kV Feeder Panel	1				DI	ILIS Fault																		Not required	
367	11kV Feeder	ACCB	6XX	11kV Feeder Panel	1	S1065	1	X15:19	DI	Pilot Wire Trip	Energised = Fault on feeder		1	4	20	R1S4DI/20					PilotWireTrip	4115	DI	16	19	Y	Y	For 11kV hardwired summary alarms are normally required	
368	11kV Feeder	ACCB	6XX	11kV Feeder Panel	1	S1065	2	X15:20	DI	DOC Trip	Energised = O/C Fault		1	4	21	R1S4DI/21					OverCurrent	4116	DI	16	20	Y	Y		
369	11kV Feeder	ACCB	6XX	11kV Feeder Panel	1	S1065	3	X15:21	DI	Trip Circuit 1 Supervision Alarm	Energised = TC 1 Healthy		1	4	22	R1S4DI/22					TripCircuitSupervision1	4117	DI	16	21		Y	From TC relay	Y
370	11kV Feeder	ACCB	6XX	11kV Feeder Panel	1	S1065	4	X15:22	DI	Trip Circuit 2 Supervision Alarm	Energised = TC 2 Healthy		1	4	23	R1S4DI/23					TripCircuitSupervision2	4118	DI	16	22		Y	From TC relay	Y
371	11kV Feeder	ACCB	6XX	11kV Feeder Panel	1	S1065	5	X15:23	DI	CB Fail Alarm (K187L CB)	Energised = CB did not trip – TC1		1	4	24	R1S4DI/24					BreakerFailPW	4119	DI	16	23	Y	Y		Y
372	11kV Feeder	ACCB	6XX	11kV Feeder Panel	1	S1065	6	X15:24	DI	CB Fail Alarm (K67 CB)	Energised = CB did not trip – TC2		1	4	25	R1S4DI/25					BreakerFailOC	4120	DI	16	24	Y	Y		Y
373	11kV Feeder	ACCB	6XX	11kV Feeder Panel							High = Comms Healthy										PWRelayCommsFail	37888	DI	148	0			Internal to RTU	
374	11kV Feeder	ACCB	6XX	11kV Feeder Panel		WORD-16	BIT 0	P521	Serial	Pilot Wire Trip Alarm (A-Phase)	High = PW Fault										PWTripA	37889	DI	148	1	Y			
375	11kV Feeder	ACCB	6XX	11kV Feeder Panel		WORD-16	BIT 1	P521	Serial	Pilot Wire Trip Alarm (B-Phase)	High = PW Fault										PWTripB	37890	DI	148	2	Y			
376	11kV Feeder	ACCB	6XX	11kV Feeder Panel		WORD-16	BIT 2	P521	Serial	Pilot Wire Trip Alarm (C-Phase)	High = PW Fault										PWTripC	37891	DI	148	3	Y			
377	11kV Feeder	ACCB	6XX	11kV Feeder Panel		WORD-16	BIT 3	P521	Serial	Pilot Wire Trip Alarm (AB-Phase)	High = PW Fault										PWTripAB	37892	DI	148	4	Y			
378	11kV Feeder	ACCB	6XX	11kV Feeder Panel		WORD-16	BIT 4	P521	Serial	Pilot Wire Trip Alarm (AC-Phase)	High = PW Fault										PWTripAC	37893	DI	148	5	Y			
379	11kV Feeder	ACCB	6XX	11kV Feeder Panel		WORD-16	BIT 5	P521	Serial	Pilot Wire Trip Alarm (BC-Phase)	High = PW Fault										PWTripBC	37894	DI	148	6	Y			
380	11kV Feeder	ACCB	6XX	11kV Feeder Panel		WORD-16	BIT 6	P521	Serial	Pilot Wire Trip Alarm (ABC-Phase)	High = PW Fault										PWTripABC	37895	DI	148	7	Y			
381	11kV Feeder	ACCB	6XX	11kV Feeder Panel		WORD-16	BIT 7	P521	Serial	Trip Circuit 1 Supervision Alarm	High = TC1 Healthy										TripCircuitSupervision1	37896	DI	148	8				
382	11kV Feeder	ACCB	6XX	11kV Feeder Panel		WORD-16	BIT 8	P521	Serial	CB Fail Alarm (TC1 – P521)	High = CB did not trip – TC1										BreakerFailPW	37897	DI	148	9	Y			
383	11kV Feeder	Feeder	6XX	11kV Feeder Panel		WORD-16	BIT 9	P521	Serial	Pilot

UPFL11001PDBE1 Uncontrolled when printed. Check Intranet for latest version

I/O No.	SCADA Equipment Name	Plant	Desig	From (Field Equipment Name)	Battery	Cable No	Core No	Field Device Terminal	Signal Type	Signal Description	Signal Status	CT or VT Ratio	RTU Rack	RTU Slot	RTU Chan	Terminal	DCCB Ctrl Bus	Pos Alarm Bus	Neg Alarm Bus	Loop	Master Station Mosaic Quantity (Point)	DNP Index	Type	Slot	Chan	Invert	Hard wired	Comment	Required by Standard
394	11kV Feeder	ACCB	6XX	11kV Feeder Pane		WORD-17	BIT 9	P127	Serial	CB FAIL Alarm (TC2 – P127)	High = CB did not trip – TC2										BreakerFailOC	38154	DI	149	10	Y			
395	11kV Non feeder			33/11 11kV ACCB	1	S1055	1	X15:01		Control +ve						R1S11DO/CH8-a													Y
396	11kV Non feeder	ACCB	33/11 11KV	33/11 11kV ACCB	1	S1055	2	X15:03	PO	Remote Close Command			1	11	8	R1S11DO/CH8-b					Close	2823	PO	11	7				Y
397	11kV Non feeder			33/11 11kV ACCB	1	S1055	3	X15:02		Control +ve						R1S11DO/CH7-a											Y		Y
398	11kV Non feeder	ACCB	33/11 11KV	33/11 11kV ACCB	1	S1055	4	X15:04	PO	Remote Open Command			1	11	7	R1S11DO/CH7-b					Open	2822	PO	11	6		Y		Y
399	11kV Non feeder	ACCB	33/11 11KV	33/11 11kV ACCB	1	S1070	1	X15:08	DI	ACCB Open	Energised = CB Open		2	4	26	R2S4DI/26					Status(1)	4121	DI	16	25		Y		Y
400	11kV Non feeder	ACCB	33/11 11KV	33/11 11kV ACCB	1	S1070	2	X15:09	DI	ACCB Closed	Energised = CB Closed		2	4	27	R2S4DI/27					Status(0)	4122	DI	16	26		Y		Y
401	11kV Non feeder	Switch	33/11 11kV ISOL	33/11 11kV ACCB	1	S1070	3	X15:10	DI	Disconnector Open	Energised = Disc Open		2	4	28	R2S4DI/28					Status(1)	4123	DI	16	27		Y		Y
402	11kV Non feeder	Switch	33/11 11kV ISOL	33/11 11kV ACCB	1	S1070	4	X15:11	DI	Disconnector Closed	Energised = Disc Closed		2	4	29	R2S4DI/29					Status(0)	4124	DI	16	28		Y		Y
403	11kV Non feeder	Switch	33/11 11kV EARTH	33/11 11kV ACCB	1	S1070	5	X15:12	DI	Earth Switch Open	Energised = ES Open		2	4	30	R2S4DI/30					Status(1)	4125	DI	16	29		Y		Y
404	11kV Non feeder	Switch	33/11 11kV EARTH	33/11 11kV ACCB	1	S1070	6	X15:13	DI	Earth Switch Closed	Energised = ES Closed		2	4	31	R2S4DI/31					Status(0)	4126	DI	16	30		Y		Y
405	11kV Non feeder	ACCB	33/11 11KV	33/11 11kV ACCB	1	S1070	7	X15:14	DI	CB Motor Spring Charged	Energised = Charged		2	4	32	R2S4DI/32					SpringCharged	4127	DI	16	31		Y	Add delay at Master Station if this comes up while charging	Y
406	11kV Non feeder	ACCB	11KV BUS SECTION	33/11 11kV ACCB	1	S1070	8	X15:15	DI	ILIS Trip	Energised = ILIS Trip										ILISTrip					Y		Not required	
407	11kV Non feeder	ACCB	11KV BUS SECTION	33/11 11kV ACCB	1	S1070	9	X15:16	DI	ILIS Fault	Energised = Healthy										iLISFault							Not required	
408	11kV Non feeder	ACCB	33/11 11KV	33/11 11kV ACCB	1	S1070	10	X15:17	DI	OC Relay (P127) Watchdog	Energised = Relay Healthy		2	5	1	R2S5DI/1					OverCurrentRelay	4352	DI	17	0				
409	11kV Non feeder	ACCB	33/11 11KV	33/11 11kV ACCB	1	S1070	11	X15:18	DI	Trip Circuit 2 Supervision Alarm (TC2)	Energised = TC2 Healthy		2	5	2	R2S5DI/2					TripCircuitSupervision2	4353	DI	17	1				
410	11kV Non feeder	ACCB	33/11 11KV	33/11 11kV ACCB		IA080	W	X3:1	AI	B Phase AC Current +ve	0-10 mA = 0 - 300 A	300/1A	2	3	33	R2S3AI/CH33+					Current	3872	AI	15	32			Not required for Bus Section ACCBs	Y
411	11kV Non feeder	ACCB	33/11 11KV	33/11 11kV ACCB		IA080	B	X3:4		B Phase AC Current -ve			2	3	33	R2S3AI/CH33-													Y
412	11kV Non feeder	ACCB	33/11 11KV	33/11 11kV ACCB		IA080	S			Screen																			Y
413	11kV Non feeder	ACCB	33/11 11KV	33/11 11kV ACCB	1	S1067	1		DI	Neutral Leakage Trip	Energised = Neutral Fault		2	5	3	R2S5DI/3					NeutralLeakageProt		DI	17	2	Y		Only required for 33/11 11kV CB	
414	11kV Non feeder	ACCB	11KV BUS SECTION	33/11 11kV ACCB	1	S1067	2		DI	Differential Prot Supply Healthy	Energised = Volts present		2	5	4	R2S5DI/4						4355	DI	17	3				
415	11kV Non feeder	ACCB	11KV BUS SECTION	33/11 11kV ACCB	1	S1066	1		DI	Cable Diff MTM Trip	Energised = Diff Fault		2	5	5	R2S5DI/5						4356	DI	17	4	Y	Y	Bus section CBs	
416	11kV Non feeder	ACCB	11KV BUS SECTION	33/11 11kV ACCB	1	S1066	2		DI	Busbar Protection MTM Trip	Energised = Busbar Fault		2	5	6	R2S5DI/6						4357	DI	17	5	Y	Y	Bus section CBs	Y
417	11kV Non feeder	ACCB	11KV BUS SECTION	33/11 11kV ACCB	1	S1066	3		DI	IGIS - 1											IGISAlarm							Not required	
418	11kV Non feeder	ACCB	11KV BUS SECTION	33/11 11kV ACCB	1	S1066	4		DI	IGIS - 2											IGISFault							Not required	
419	11kV Non feeder	ACCB	11KV BUS SECTION	33/11 11kV ACCB	1	S1066	5		DI	IGIS - 3											IGISWarn							Not required	
420	11kV Non feeder	ACCB	6XX	33/11 11kV ACCB	1	S1065	2	X15:20	DI	DOC Trip	Energised = O/C Fault		2	5	7	R2S5DI/7					OverCurrent	4358	DI	17	6	Y	Y	For 11kV hardwired summary alarms are normally required	
421	11kV Non feeder	ACCB	11KV BUS SECTION	33/11 11kV ACCB	1	S1066	6		DI	Trip Circuit 1 Supervision Alarm (TC1)	Energised = TC1 Healthy		2	5	8	R2S5DI/8					TripCircuitSupervision1	4359	DI	17	7		Y		
422	11kV Non feeder	ACCB	11KV BUS SECTION	33/11 11kV ACCB	1	S1066	7		DI	Trip Circuit 2 Supervision Alarm (TC2)	Energised = TC2 Healthy		2	5	9	R2S5DI/9					TripCircuitSupervision2	4360	DI	17	8		Y		
423	11kV Non feeder	ACCB	6XX	33/11 11kV ACCB	1	S1065	5	X15:23	DI	CB Fail Alarm (K187L CB)	Energised = CB did not trip – TC1		2	5	10	R2S5DI/10					BreakerFailPW	4361	DI	17	9	Y	Y		Y
424	11kV Non feeder	ACCB	6XX	33/11 11kV ACCB	1	S1065	6	X15:24	DI	CB Fail Alarm (K67 CB)	Energised = CB did not trip – TC2		2	5	11	R2S5DI/11					BreakerFailOC	4362	DI	17	10	Y	Y		Y
425	11kV Non feeder	ACCB	33KV 1-2 BS	33/11 11kV ACCB	1	S1066	8		DI	Diff Relay (P127) Watchdog	Energised = Relay Healthy		2	5	12	R2S5DI/12					DiffRelay	4363	DI	17	11		Y	Required for Bus Tie CBs	Y
426	11kV Non feeder	ACCB	11KV BUS SECTION	33/11 11kV ACCB	1	S1066	10		DI	Differential Trip Alarm (A-Phase)	Energised = Diff Fault		2	5	13	R2S5DI/13					DifferentialTripA	4364	DI	17	12	Y			
427	11kV Non feeder	ACCB	11KV BUS SECTION	33/11 11kV ACCB	1	S1066	11		DI	Differential Trip Alarm (B-Phase)	Energised = Diff Fault		2	5	14	R2S5DI/14					DifferentialTripB	4365	DI	17	13	Y			
428	11kV Non feeder	ACCB	11KV BUS SECTION	33/11 11kV ACCB	1	S1066	12		DI	Differential Trip Alarm (C-Phase)	Energised = Diff Fault		2	5	15	R2S5DI/15					DifferentialTripC	4366	DI	17	14	Y			
429	11kV Non feeder	ACCB	33KV 1-2 BS	33/11 11kV ACCB																	DiffRelayCommEnb							Not required. It is internal to RTU and not used.	
430	11kV Non feeder	ACCB	33KV 1-2 BS	33/11 11kV ACCB							High = Comms Healthy										DiffRelayCommFail	38400	DI	150	0			Internal to RTU	
431	11kV Non feeder	ACCB	33/11 11KV	33/11 11kV ACCB		WORD-20	BIT 0	P127	Serial	OC Trip Alarm (A-phase)	High = O/C Fault										OverCurrentA	38401	DI	150	1	Y			
432	11kV Non feeder	ACCB	33/11 11KV	33/11 11kV ACCB		WORD-20	BIT 1	P127	Serial	OC Trip Alarm (B-phase)	High = O/C Fault										OverCurrentB	38402	DI	150	2	Y			
433	11kV Non feeder	ACCB	33/11 11KV	33/11 11kV ACCB		WORD-20	BIT 2	P127	Serial	OC Trip Alarm (C-phase)	High = O/C Fault										OverCurrentC	38403	DI	150	3	Y			
434	11kV Non feeder	ACCB	33/11 11KV	33/11 11kV ACCB		WORD-20	BIT 3	P127	Serial	OC Trip Alarm (AB-phase)	High = O/C Fault										OverCurrentAB	38404	DI	150	4	Y			
435	11kV Non feeder	ACCB	33/11 11KV	33/11 11kV ACCB		WORD-20	BIT 4	P127	Serial	OC Trip Alarm (AC-phase)	High = O/C Fault										OverCurrentAC	38405	DI	150	5	Y			
436	11kV Non feeder	ACCB	33/11 11KV	33/11 11kV ACCB		WORD-20	BIT 5	P127	Serial	OC Trip Alarm (BC-phase)	High = O/C Fault										OverCurrentBC	38406	DI	150	6	Y			
437	11kV Non feeder	ACCB	33/11 11KV	33/11 11kV ACCB		WORD-20	BIT 6	P127	Serial	OC Trip Alarm (ABC-phase)	High = O/C Fault										OverCurrentABC	38407	DI	150	7	Y			
438	11kV Non feeder	ACCB	33/11 11KV	33/11 11kV ACCB		WORD-20	BIT 7	P127	Serial	Earth Fault Trip Alarm	High = Earth Fault										EarthFault	38408	DI	150	8	Y			
439	11kV Non feeder	ACCB	33/11 11KV	33/11 11kV ACCB		WORD-20	BIT 8	P127	Serial	Trip Circuit 1 Supervision Alarm	High = TC1 Healthy										TripCircuitSupervision1	38409	DI	150	9				Y
440	11kV Non feeder	ACCB	33/11 11KV	33/11 11kV ACCB		WORD-20	BIT 9	P127	Serial	CB Fail Alarm (TC1 or TC2)	High = CB did not trip										BreakerFailOC	38410	DI	150	10				Y
441	11kV Non feeder	ACCB	AUX 11KV	33/11 11kV ACCB		WORD-20	BIT 10	P127	Serial	Over Temperature Alarm	High = Alarm Temp Exceeded											38411	DI	150	11			Not required.	
442	11kV Non feeder	ACCB	AUX 11KV	33/11 11kV ACCB		WORD-20	BIT 11	P127	Serial	Over Temperature Trip	High = Trip Temp Exceedec											38412	DI	150	12	Y		Not required	
443	DCCB BAR or FAR			DCCB	2			X15:01		Control +ve						R1S12DO/CH2-a	●										Y		Y
444	DCCB BAR or FAR	BARCB	481	DCCB	2	S1101	1	X15:03	PO	Remote Close Command			1	12	2	R1S12DO/CH2-b					Close	3073	PO	12	1		Y		Y
445	DCCB BAR or FAR			DCCB	2			X15:02		Control +ve						R1S12DO/CH1-a	●										Y		Y
446	DCCB BAR or FAR	BARCB	481	DCCB	2	S1101	2	X15:04	PO	Remote Open Command			1	12	1	R1S12DO/CH1-b					Open	3072	PO	12	0		Y		Y
447	DCCB BAR or FAR	BARCB	481	DCCB					PO	Raise Trip Setting			2	12	5	R2S12DO/CH5						3076	PO	12	4		Y		
448	DCCB BAR or FAR	BARCB	481	DCCB	2	S1105	1	D	DI	DCCB Open	Energised = Open		2	5	16	R2S5DI/16					Status(1)	3843	DI	15	3		Y		Y
449	DCCB BAR or FAR	BARCB	481	DCCB	2	S1105	2	C	DI	DCCB Closed	Energised = Closed		2	5	17	R2S5DI/17					Status(0)	3844	DI	15	4		Y		Y
450	DCCB BAR or FAR	BARCB	481	DCCB	2	S1105	3	P	DI	Delta-I Relay Operated	Energised = Delta I Operation		2	5	18	R2S5DI/18					Deltal_Trip	3845	DI	15	5	Y	Y		
451	DCCB BAR or FAR	BARCB	481	DCCB	2	S1105	4	T	DI	Low Trip Setting Indication	Energised = Low Trip Setting		2	5	19	R2S5DI/19						3846	DI	15	6		Y		
452	DCCB BAR or FAR	BARCB	481	DCCB	2	S1105	5	W	DI	High Trip Setting Indication	Energised = High Trip Setting		2	5	20	R2S5DI/20						3847	DI	15	7		Y		
453	DCCB BAR or FAR	BARCB	481	DCCB		IA140	W	G	AI	DC Feeder Current +ve	20mA = 10000A		2	3	34	R2S3AI/CH34+					Current	3873	AI	15	33		Y		
454	DCCB BAR or FAR	BARCB	481	DCCB		IA140	B	F		DC Feeder Current -ve			2	3	34	R2S3AI/CH34-													
455	DCCB BAR or FAR	BARCB	481	DCCB		IA140	S	I		Screen																	Y		
456	DCCB BAR or FAR		481	DCCB					+ve	125V DC Common																		Not required	
457	1500VDC BS Switch			1500V BS Switch	2	S1160	1		+ve	125V dc common								●											
458	1500VDC BS Switch	Switch	1500V BS	1500V BS Switch	2	S1160	2		DI	Switch Open	Energised = Open		2	3	9	R2S3DI/9					Status(0)	3848	DI	15	8				
459	1500VDC BS Switch	Switch	1500V BS	1500V BS Switch	2	S1160	3		DI	Switch Closed	Energised = Closed		2	3	10	R2S3DI/10					Status(1)	3849	DI	15	9				
460	1500VDC BS Switch	DigitalEquip	DC BUS 1 LIVE	1500V BS Switch	2	S1160	4		DI	1500V DC Bus 1 Live	Energised = Live		2	3	11	R2S3DI/11					DigStatus	3850	DI	15	10				
461	1500VDC BS Switch	DigitalEquip	DC BUS 2 LIVE	1500V BS Switch	2	S1160	5		DI	1500V DC Bus 2 Live	Energised = Live		2	3	12	R2S3DI/12					DigStatus	3851	DI	15	11				
462	1500VDC BS Switch	DigitalEquip	DC BUS LINK SVC POS	1500V BS Switch	2	S1160	6		DI	Link in Service Position	Energised = In Service		2	3	13	R2S3DI/13					DigStatus	3852	DI	15	12				
463	1500VDC BS Switch	Switch	DC BUS LINK AMPS	1500V BS Switch		IA150	W		AI	Link Switch DC Current +ve	20mA = 0-1000A		2	9	1	R2S9AI/CH1+					Current	3874	AI	15	34				
464	1500VDC BS Switch			1500V BS Switch		IA150	B			Link Switch DC Current +ve			2	9	1	R2S9AI/CH1-													
465	1500VDC BS Switch			1500V BS Switch		IA150	S			Screen																			
466	Reactor			Common Equipment Panel	1	S4005	1		+ve	125V dc common								●										No controls for reactor	
467	Reactor	Reactor	REACTOR	Common Equipment Panel	1	S4005	2		DI	Reactor Over Pressure Trip	Energised = Tripped		2	5	16	R2S5DI/16					OilOverPressure	4367	DI	17	15	Y	Y		
468	Reactor	Reactor	REACTOR	Common Equipment Panel	1	S4005	3		DI	Reactor Protection Supply Healthy	Energised = Supply Healthy		2	5	17	R2S5DI/17					ACSupply	4368	DI	17	16		Y		
469	Reactor			Negative Reactor	1	S4006	1		+ve	125V dc Common								●									Y		
470	Reactor	Reactor	REACTOR	Negative Reactor	1	S4006	2		DI	Reactor Oil Overtemp Trip	Energised = Tripped		2	5	18	R2S5DI/18					OilOverTempTrip	4369	DI	17	17	Y	Y		
471	Reactor	Reactor	REACTOR	Negative Reactor	1	S4006	3		DI	Reactor Oil Overtemp Alarm	Energised = Healthy		2	5	19	R2S5DI/19					OilOverTemp	4370	DI	17	18		Y		
472	Reactor	Reactor	REACTOR	Negative Reactor		IA120	W		AI	Reactor Oil Temp +ve	20mA = 0-150C		2	4	33	R2S4AI/CH33+											Y	Wired to RTU but not sent to Master Station	
473	Reactor	Reactor	REACTOR	Negative Reactor		IA120	B			Reactor Oil Temp -ve			2	4	33	R2S4AI/CH33-											Y		
474	Reactor	Reactor	REACTOR	Negative Reactor		IA120	S			Screen																	Y		
475	Reactor	Reactor	REACTOR	Negative Reactor		IA121	W		AI	Reactor Winding Temp +ve	20mA = 0-150C		2	4	34	R2S4AI/CH34+											Y	Wired to RTU but not sent to Master Station	
476	Reactor	Reactor	REACTOR	Negative Reactor		IA121	B			Reactor Winding Temp -ve			2	4	34	R2S4AI/CH34-											Y		
477	Reactor	Reactor	REACTOR	Negative Reacto		IA121	S			Screen																	Y		
478	REC	REC	REC	Rail Earth Contactor		IA130	W		AI	Rail to Earth Volts +ve (Rail)	0-20ma = 0-800V		2	4	35	R2S4AI/CH35+					RailEarthVoltage	4130	AI	16	34		Y		
479	REC	REC	REC	Rail Earth Contactor		IA130	B			Rail to Earth Volts -ve (Earth)			2	4	35	R2S4AI/CH35-											Y		
480	REC	REC	REC	Rail Earth Contactor		IA130	S			Screen																	Y		
481	REC			Rail Earth Contactor	1	S1109	1		+ve	125V DC Common								●									Y		
482	REC	REC	REC	Rail Earth Contactor	1	S1109	2		DI	Rail Earth Contactor Open	Energised = REC Open		2	5	20	R2S5DI/20					Status(1)	4371	DI	17	19		Y	Normal state is open	
483	REC	REC	REC	Rail Earth Contactor	1	S1109	3		DI	Rail Earth Contactor Closed	Energised = REC Closed		2	5	21	R2S5DI/21					Status(0)	4372	DI	17	20		Y		
484	REC			Rail Earth Contactor	1	S1101	1			Control +ve						R1S12DO/CH4-a											Y		
485	REC	REC	REC	Rail Earth Contactor	1	S1101	2		PO	Remote Close Command			1	12	4	R1S12DO/CH4-b					Close	3075	PO	12	3		Y		
486	REC			Rail Earth Contactor	1	S1101	3			Control +ve						R1S12DO/CH3-a											Y		
487	REC	REC	REC	Rail Earth Contactor	1	S1101	4		PO	Remote Open Commanc			1	12	3	R1S12DO/CH3-b					Open	3074	PO	12	2		Y		
488	Battery Charger	BattCharger	BATTCHARGER1	125V DC Battery Charger	1	S1151	1		+ve	125V DC Common								●									Y		
489	Battery Charger	BattCharger	BATTCHARGER1	125V DC Battery Charger	1	S1151	2		DI	No1 Battery - Charger Fault	Energised = Charger Healthy		2	5	22	R2S5DI/22					Fail	4373	DI	17	21		Y	Combination of all 'other' alarms	
490	Battery Charger	BattCharger	BATTCHARGER1	125V DC Battery Charger	1	S1151	3		DI	No1 Battery – O/P Volts Low	Energised = Volts OK (above limit)		2	5	23	R2S5DI/23					LowVolts	4374	DI	17	22		Y		
491	Battery Charger	BattCharger	BATTCHARGER1	125V DC Battery Charger	1	S1151	4		DI	No1 Battery – AC Failed	Energised = AC Healthy		2	5	24	R2S5DI/24					ACSupply	4375	DI	17	23		Y	Combination of 'AC Normal' & 'CB Open' indications	
492	Battery Charger	BattCharger	BATTCHARGER1	125V DC Battery Charger		IA100	W		AI	No1 Battery - Voltage +ve	0-10mA = 0-150VDC		2	4	36	R2S4AI/CH36+					Voltage	4131	AI	16	35		Y		
493	Battery Charger	BattCharger	BATTCHARGER1	125V DC Battery Charger		IA100	B			No1 Battery - Voltage -ve			2	4	36	R2S4AI/CH36-											Y		
494	Battery Charger	BattCharger	BATTCHARGER1	125V DC Battery Charger		IA100	S			Screen																	Y		
495	Battery Charger	BattCharger	BATTCHARGER1	125V DC Battery Charger	1	S1151	5		DI	No1 Battery – O/P Volts High	Energised = Volts OK (below limit)																	Combine alarm with BattCharger Fail	
496	Battery Charger	BattCharger	BATTCHARGER1	125V DC Battery Charger	1	S1151	6		DI	No1 Battery – Earth Fault	Energised = No Fault																	Combine alarm with BattCharger Fail	
497	Battery Charger	BattCharger	BATTCHARGER1	125V DC Battery Charger	1	S1151	7		DI	No1 Battery – Rectifier Fail	Energised = Rectifier OK																	Combine alarm with BattCharger Fail	
498	Battery Charger	BattCharger	BATTCHARGER1	125V DC Battery Charger	1	S1151	8		DI	No1 Battery – CB Open	Energised = CB Closed																	Combine alarm with BattCharger Fail	
499	Battery Charger	BattCharger	BATTCHARGER1	125V DC Battery Charger	1	S1151	9		DI	No1 Battery – O/P Volts High Warning	Energised = Volts OK (below limit)																	Not required	
500	Battery Charger	BattCharger	BATTCHARGER1	125V DC Battery Charger	1	S1151	10		DI	No1 Battery – O/P Volts Low Warning	Energised = Volts OK (below limit)																	Not required	
501	Battery Charger	BattCharger	BATTCHARGER1	125V DC Battery Charger	1	S1151	11		DI	No1 Battery – Comms Fail	Energised = Comms OK																	Future	
502	Battery Charger	BattCharger	BATTCHARGER1	125V DC Battery Charger	1	S1151	12			Battery Room Ventilation Fan Fail	Energised = Fan working		2	5	25	R2S5DI/25					VentFan	4376	DI	17	24		Y	Required for rooms with forced ventilation	
503	Battery Charger	BattCharger	BATTCHARGER1	125V DC Battery Charger		WORD-25	BIT0-9		Serial																			Allow for future serial comms	
504	Auxiliary Supply			415/240V AC Board	1	S1150	1		+ve	125V DC Common								●									Y		
505	Auxiliary Supply	Contactor	NO1 415V AUX	415/240V AC Board	1	S1150	2		DI	No.1 Aux Tx In Service	Energised = In Service		2	5	26	R2S5DI/26					Status	4377	DI	17	25		Y	Not required if from Rectifier Tx or 11kV Aux CB	
506	Auxiliary Supply	Contactor	NO2 415V AUX	415/240V AC Board	1	S1150	3		DI	No.2 Aux Tx In Service	Energised = In Service		2	5	27	R2S5DI/27					Status	4378	DI	17	26		Y	Not required if from Rectifier Tx or 11kV Aux CB	
507	Auxiliary Supply	DigitalEquip	AUX C/O MANUAL	415/240V AC Board	1	S1150	4		DI	Auto Selected	Energised = Auto		2	5	28	R2S5DI/28					DigStatus	4379	DI	17	27		Y		
508	Auxiliary Supply	DigitalEquip	NO1 AUX SUPPLY	415/240V AC Board	1	S1150	5		DI	No1 415V Healthy	Energised = Healthy		2	5	29	R2S5DI/29					DigStatus	4380	DI	17	28		Y	Not required if from Rectifier Tx or 11kV Aux CB	
509	Auxiliary Supply	DigitalEquip	NO2 AUX SUPPLY	415/240V AC Board	1	S1150	6		DI	No2 415V Healthy	Energised = Healthy		2	5	30	R2S5DI/30					DigStatus	4381	DI	17	29		Y	Not required if from Rectifier Tx or 11kV Aux CB	
510	Auxiliary Supply	DigitalEquip	ASV	415/240V AC Boarc	1	S1150	7		DI	Aux Supply Volts (C/O switch O/P) Phase Failure rela	Energised = Healthy		2	5	31	R2S5DI/31					DigStatus	4382	DI	17	30		Y		
511	Staff alarm			Staff Switch	1	S1170	1		+ve	125V dc common								●									Y	One input is required per area, see EL 0204559.	
512	Staff alarm	Staff	STAFF	Staff Switch	1	S1170	2		DI	Staff access switch (Intruder Detection)	Energised = Staff present		1	4	9	R1S4DI/9					Switch	1032	DI	4	8		Y		
513	Staff alarm			Door Reeds	1	S1171	1		+ve	125V dc common								●									Y		
514	Staff alarm	Staff	STAFF	Door Reeds	1	S1171	2		DI	Door Reed Switches for HV Room	Energised = Doors Closed		1	4	10	R1S4DI/10					DoorReed	1033	DI	4	9		Y	One input is required per area, see EL 0204559.	
515	Staff alarm	Staff	STAFF						DI	Staff status	High = Staff absent										Status	16640	DI	65	0			One per area. Internal to RTU	
517	Supy Phone	SupPhone	SUPY PHONE	Supy Phone	1																PushButton	1035	DI	4	11	Y	Y	For old locations: Gives a ring Indication to EOC	
518	Supy Phone			Bell Silence Button	1	S1178B	1		+ve	125V DC Common								●									Y		
519	Supy Phone	SupPhone	SUPY PHONE	Bell Silence Button	1	S1178B	2		DI	HV Equip Room VoIP Phone Buzzer Silence PB	Energised = Silence Alarm		1	4	13	R1S4DI/13					OffHook	1036	DI	4	12	Y	Y	One input is required per area, see EL 0204559.	
520	Supy Phone	SupPhone	SUPY PHONE																		Call	17152	PO	67	0			Goes to LCR to ring buzzer	
521	Supy Phone			Piezo Buzzer	1	S1175	1		+ve	125V DC Common								●									Y	This output is for staff alarm and phone buzzer	
522	Supy Phone			Piezo Buzzer	1	S1175	2		Latch	HV Equip Room Audible Alarm (Latched	Energised = Sound Alarm		1	9	3	R1S9DO/CH3							PO				Y	Hard wired output to control staff/phone bell via local control programm	
523	RTU alarms	DigitalEquip	RTU FAULT	RTU Cabinet					DI	Internal RTU Fault	High = Healthy										DigStatus	16641	DI	65	1			Internal to RTU, for Foxboro RTUs	
524	RTU alarms	DigitalEquip	ALARM BUS	RTU Cabinet	1	Internal	1		DI	Alarm Bus Fuse	Energised = Healthy		1	4	1	R1S4DI/1					DigStatus	1024	DI	4	0		Y		
525	RTU alarms	DigitalEquip	CONTROLS DISABLED	RTU Cabinet	1	Internal	1		DI	Remote Controls Disabled	Energised = Controls Disabled		1	4	2	R1S4DI/

Superseded by T HREL 11001 PDE

I/O No.	SCADA Equipment Name	Plant	Desig	From (Field Equipment Name)	Battery	Cable No	Core No	Field Device Terminal	Signal Type	Signal Description	Signal Status	CT or VT Ratio	RTU Rack	RTU Slot	RTU Chan	Terminal	DCCB Ctrl Bus	Pos Alarm Bus	Neg Alarm Bus	Loop	Master Station Mosaic Quantity (Point)	Master Station DNP Index	Master Station Type	Master Station Slot	Master Station Chan	Master Station Invert	Hard wired	Comment	Required by Standard
527	Comms		COMMS PANEL						+ve	125V DC Common																		Not required, 48V & interposing relays used (nothing > 50V in comms panel)	
528	Comms			C&CS switch	1	S1181	1	K2:A1	+ve	48V DC Common																	Y		
529	Comms	DigitalEquip	COMMS SWITCH A	C&CS switch	1	S1181	2	K2:A2	DI	Comms Panel - Switch A Fault	Energised = Healthy		1	4	4	R1S4DI/4					DigStatus	1027	DI	4	3		Y		
530	Comms			C&CS switch	1	S1181	3	K4:A1	+ve	48V DC Common																	Y		
531	Comms	DigitalEquip	COMMS SWITCH B	C&CS switch	1	S1181	4	K4:A2	DI	Comms Panel - Switch B Fault	Energised = Healthy		1	4	5	R1S4DI/5					DigStatus	1028	DI	4	4		Y		
532	Comms	DigitalEquip	SWITCH A 48V SUPPLY	Power Supply in RTU	1	Internal	1		DI	125/48V DC Supply A Fail	Energised = Healthy		1	4	6	R1S4DI/6					DigStatus	1029	DI	4	5		Y		
533	Comms	DigitalEquip	SWITCH B 48V SUPPLY	Power Supply in RTU	1	Internal	1		DI	125/48V DC Supply B Fai	Energised = Healthy		1	4	7	R1S4DI/7					DigStatus	1030	DI	4	6		Y		
534	Dummy CB	TestCB	CIRCUIT BREAKER	RTU Cabinet	1	Internal	1		DI	CB Closed	Energised = Closed		1	4	8	R1S4DI/8					Status	1031	DI	4	7		Y	Normally open, relay latches closed when close control sent	
535	Dummy CB			RTU Cabinet	1	Internal	2			Control +ve						R1S9DO/CH1-a											Y		
536	Dummy CB	TestCB	CIRCUIT BREAKER	RTU Cabinet	1	Internal	3		PO	Remote Open Command			1	9	1	R1S9DO/CH1-b					Open	2304	PO	9	0		Y		
537	Dummy CB			RTU Cabinet	1	Internal	4			Control +ve						R1S9DO/CH2-a											Y		
538	Dummy CB	TestCB	CIRCUIT BREAKER	RTU Cabinet	1	Internal	5		PO	Remote Close Commanc			1	9	2	R1S9DO/CH2-b					Close	2305	PO	9	1		Y		
539	Fire System			Fire Panel	1	S1182	1		+ve	125V DC Common								●									Y	From positive alarm bus	
540	Fire System	DigitalEquip	FIRE ALARM FAULT	Fire Panel	1	S1182	2		DI	Fire Detection System Faulty	Energised = Healthy		2	6	1	R2S6DI/1					DigStatus	4608	DI	18	0		Y	Interposing relay may be required	
541	Fire System	DigitalEquip	FIRE ALARM ISOLATED	Fire Panel	1	S1182	3		DI	Fire Detection System Isolated	Energised = Isolated		2	6	2	R2S6DI/2					DigStatus	4609	DI	18	1		Y	Interposing relay may be required	
542	Fire System	DigitalEquip	FIRE ALARM	Fire Pane	1	S1182	4		DI	Fire alarm	Energised = Fire detected		2	6	3	R2S6DI/3					DigStatus	4610	DI	18	2		Y	Interposing relay may be requirec	
543	Spares			Panel	1	S3000	15																					Spare field cable core	
544	Spares			Panel	1	S3000	16																					Spare field cable core	

Not required

Conditional