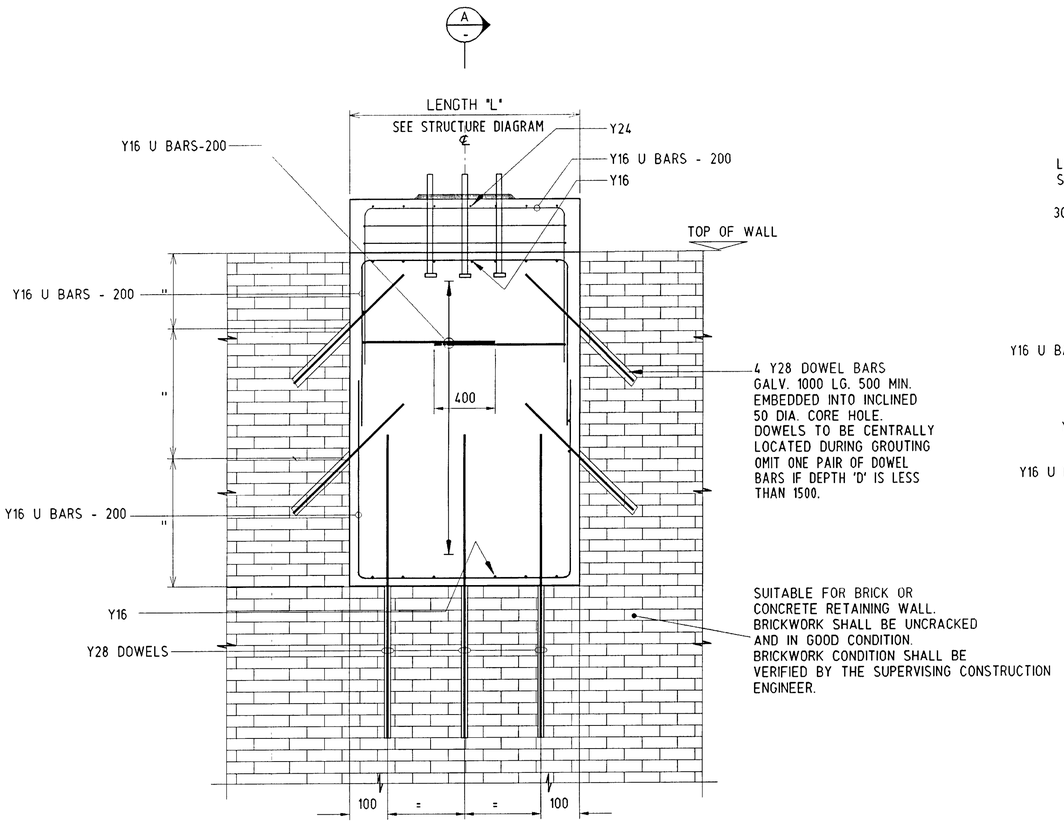

ELEVATION OF FOOTING IN RETAINING WALL

SCALE 1:20

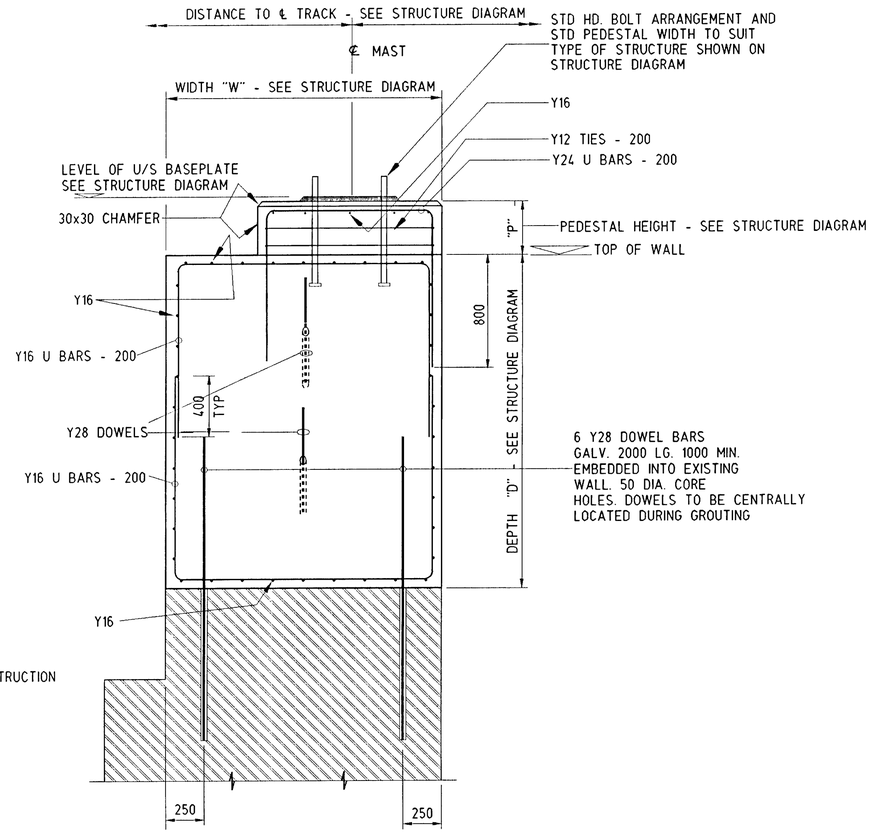

SECTION A

SCALE 1:20

NOTES

GENERAL:
1. DIMENSIONS ARE NOT TO BE SCALED FROM THIS DRAWING.
2. THIS DRAWING SHALL BE READ IN CONJUNCTION WITH RELEVANT STRUCTURE DIAGRAM DRAWINGS.

CONCRETE:
1. ALL WORKMANSHIP AND MATERIALS TO BE IN ACCORDANCE WITH A.S.3600, CURRENT EDITION.
2. CONCRETE : F'c = 32 MPa.
3. MAXIMUM AGGREGATE SIZE : 20mm.
4. MAXIMUM SLUMP : 80mm.
5. CLEAR COVER TO REINFORCEMENT : 60mm.
6. CHAMFERS : 30mm x 30mm ON ALL CORNERS U.N.O.

REINFORCEMENT:
1. REINFORCEMENT IS SHOWN DIAGRAMMATICALLY. IT IS NOT NECESSARILY SHOWN IN TRUE PROJECTION.
2. 'Y' DENOTES DEFORMED BARS, GRADE 410 TO A.S.1302
3. 'R' DENOTES PLAIN ROUND BARS TO A.S.1302.
4. 'F' DENOTES HARD DRAWN STEEL FABRIC TO A.S.1304.

GROUT:
1. GROUT UNDER MASTS AND FOR DOWEL BARS SHALL BE MBT "SELTEX", NON SHRINK CEMENT GROUT OR APPROVED EQUIVALENT WITH A MINIMUM COMPRESSIVE STRENGTH OF 30 MPa. AT 7 DAYS

EXCAVATION:
1. ALL FOOTING EXCAVATION TO BE SHORED UP, BACKFILLED AND COMPACTED ON COMPLETION TO ENSURE SUPPORT OF TRACK STRUCTURE AND PREVENT LOSS OF BALLAST PROFILE AT ALL TIMES. WHERE NECESSARY PERMANENT RETAINING STRUCTURES MUST BE PROVIDED TO RESTORE EMBANKMENT PROFILE AND TO ENSURE FOOTING REMAINS FREE FROM SPOIL.

UNCONTROLLED COPY
Please check for latest revision at
RailCorp Central Plan room
Level 1 South Wing
477 Pitt St, SYDNEY
Phone: 8922 1401
Email: PlanRoom@railcorp.nswgov.au

AMD	REFERENCE	DESCRIPTION	SIGN/DATE

RAIL SERVICES AUSTRALIA
CONSULTING DIVISION
CIVIL DESIGN

DRAWN
DESIGNED
DRG CHECK
DESIGN CHECK Paul Honer
PROJECT LEADER Muscat
MANAGER, CIVIL DESIGN 18.2.99 DATE

WARNING SCANNED IMAGE

OVERHEAD WIRING STRUCTURES

ELECTRIFIED LINES

FOOTING IN RETAINING WALL

FOOTINGS ©

PROJECT No.	SHEET 1 OF 1	A1
T.M.C. ID.	No. CV 0142949	A