Engineering Standard
Rolling Stock

ESR 0032

AXLE BEARING REFERENCE MANUAL

Version 1.1

Issued May 2013

Owner:	Technical Specialist Rolling Stock Performance Standards		
Approved by:	Stephen White, A/Manager, Rolling Stock Access Integrity	Authorised by:	Michael Uhlig, A/Chief Engineer Rolling Stock

Disclaimer

This document was prepared for use on the RailCorp Network only.

RailCorp makes no warranties, express or implied, that compliance with the contents of this document shall be sufficient to ensure safe systems or work or operation. It is the document user's sole responsibility to ensure that the copy of the document it is viewing is the current version of the document as in use by RailCorp.

RailCorp accepts no liability whatsoever in relation to the use of this document by any party, and RailCorp excludes any liability which arises in any manner by the use of this document.

Copyright

The information in this document is protected by Copyright and no part of this document may be reproduced, altered, stored or transmitted by any person without the prior consent of RailCorp.

Engineering Standard

NSW Transport RailCorp

Document control

Version	Date	Summary of change
(ESR 0032) 1.0	January 2004	Based on various TRS standards
(ESR 0032) 2.0	May 2006	Reissued as a RailCorp Standard
(ESR 0032) 2.1	May 2008	References to some ESR standards amended
(ESR 0032) 1.0	June 2010	Reformatted and renumbered ESR 0032
1.1	May 2013	

Summary of changes from previous version

Summary of change	Section
Draft Version 1.1	
Some minor reformatting	
Reference to ESR 0400 added	4.1
Reference to “Section 4.8.4” amended to read “Section 4.7.4”	4.7.1.2
Missing figure added	9.2
Colour codes in Table 22 updated	9.2.1
Colour codes in Table 23 updated	9.2.2
Reference to greasing colours for general freight deleted	9.2.2.1
Section on grease type added	9.3.6

Contents

1 Introduction 9
2 Scope....9
3 Application....9
4 Reference documents....9
4.1 RailCorp standards 9
4.2 RailCorp drawings....9
4.3 Australian Standards....9
5 Bearing inspection....10
5.1 Vehicle in service 10
5.2 Transported wheelsets....10
5.3 Before installation into bogies 10
5.4 DI Inspections 10
5.5 Following Derailment....10
6 Wheelset attention 11
6.1 Wagons re-entering service or travelling low kilometres 11
7 Spherical axle box bearings 12
7.1 Terminology 12
7.2 Roller bearing general requalification 12
7.2.1 Reconditioning facilities 12
7.2.2 Cleaning....12
7.2.3 Inspection 13
7.2.3.1 Specified limits 13
7.2.3.2 Measurements....13
7.2.3.3 Outer ring 13
7.2.3.4 Inner ring 14
7.2.3.5 Rollers 14
7.2.3.6 Roller/outer ring radial clearance 15
7.2.3.7 Cage....15
7.2.3.8 Roller/cage clearance....15
7.2.4 Defects and rework of bearings....15
7.2.4.1 Etching 15
7.2.4.2 Stain discolouration....15
7.2.4.3 Corrosion pitting and rust 15
7.2.4.4 Heat discolouration....15
7.2.4.5 Fatigue cracks, fatigue spalling or flaking 16
7.2.4.6 Fracture 16
7.2.4.7 Nicks....16
7.2.4.8 Peeling 16
7.2.4.9 Smearing 17
7.2.4.10 Brinelling....17
7.2.4.11 Indentations....17
7.2.4.12 Electric burns....17
7.2.4.13 Scoring 18

7.2.5 Cleaning of bearings after rework 20
7.2.6 Marking of bearings 20
7.2.7 Rust prevention following inspection 21
7.2.8 Storage 21
7.2.9 Information required 22
7.2.9.1 Series 22
7.2.9.2 Manufacturer code 23
7.2.9.3 Serial number 23
7.2.9.4 Date of first installation 23
7.2.9.5 Repairers codes 23
7.2.9.6 Reject/rework reason codes 24
7.3 Requalification of freight axleboxes 25
7.3.1 General 25
7.3.2 Components 25
7.3.3 Handling 25
7.3.4 Dismantling 25
7.3.5 Cleaning 25
7.3.6 Inspection 26
7.3.6.1 Housing 26
7.3.6.2 Inner bore 26
7.3.6.3 Crown height 27
7.3.6.4 Longitudinal wear face 27
7.3.6.5 Axlebox gas plug thread 28
7.3.7 Backcover 28
7.3.8 Collar 28
7.3.9 Studs 28
7.3.10 Grease nipples 28
7.3.11 Gas plugs and seals 28
7.3.12 Grease nipples 29
7.3.13 Packaging 29
7.4 Axleboxes components 30
7.4.1 9R axlebox 30
7.5 Reclaiming axleboxes by metal spraying 31
7.5.1 Preparation 32
7.5.2 Preheat & pre-machining 32
7.5.2.1 Preheat 32
7.5.2.2 Pre-machine 32
7.5.2.3 Grit blasting 32
7.5.3 Masking 33
7.5.3.1 Masking material 33
7.5.4 Spraying procedure 33
7.5.4.1 Bond coat 33
7.5.4.2 Top coat 33
7.5.5 Finishing 33
7.5.6 Identification 33
7.5.7 Approval 34

7.6 Axlebox bearing equivalent list 34
7.6.1 Freight axlebox bearings 34
7.6.2 48 Class axlebox 35
7.7 Requalification of bearing journals for axles fitted with spherical roller bearings 36
7.7.1 Diameter 36
7.7.1.1 Bearing seat areas 36
7.7.1.2 Measuring for upset journal ends 37
7.7.1.3 Dust guard diameter 37
7.7.2 Fillet radius 38
7.7.3 Axle journal damage 38
7.7.4 Rework 38
7.7.5 Gauges 38
7.8 Installation of axleboxes 38
7.8.1 Terminology 38
7.8.2 Components and preparation 39
7.8.3 Bearing application 39
7.8.4 Greasing 39
7.8.5 Fitting of axleboxes 40
8 Package unit bearings 41
8.1 Components 41
8.1.1 Identification 41
8.2 Requalification of axle bearing journals fitted with package unit bearings 42
8.2.1 General 42
8.2.2 Diameter 42
8.2.2.1 Bearing seat areas 42
8.2.2.2 Measuring for upset journal ends 43
8.2.3 Dust guard diameter 44
8.2.4 Axle tapped holes 44
8.2.5 Fillet radius 44
8.2.6 Axle journal damage 45
8.2.6.1 General 45
8.2.6.2 Journal grooving from inboard seal wear ring 45
8.2.7 Rework 46
8.2.8 Gauges 46
8.2.8.1 Measuring gauges 46
8.2.8.2 Bearing seat location gauge 46
8.2.8.3 Axle journal fillet gauge 46
8.3 Package unit bearing overhaul 47
8.3.1 General 47
8.3.2 Specification 47
8.3.3 Gauges 47
8.3.4 Bearing disassembly 47
8.3.5 Cleaning 48
8.3.6 Inspection of inner and outer rings 48
8.3.6.1 Outer ring 48
8.3.6.2 Inner Ring 48

8.3.6.3 Rollers 48
8.3.6.4 Cage 48
8.3.7 Modifications 48
8.3.8 Seal wear ring 49
8.3.9 End cap 49
8.3.10 Marking bearings 49
8.3.11 Seal wear ring 50
8.3.12 Seals 50
8.3.13 Spacers 50
8.3.14 Bearing assembly 50
8.3.15 Bearing lubrication 51
8.3.16 Cap screws 51
8.3.17 End cap 51
8.3.18 Rust prevention following inspection 51
8.3.19 Storage 52
8.3.20 Information Required 52
8.4 Package unit bearing installation 52
8.4.1 General 52
8.4.2 Bearing application 52
8.4.3 Preparation and components 52
8.4.3.1 Applying end cap 52
8.5 Package unit bearing equivalents list 53
8.5.1 General 53
8.5.2 Acceptable parts 54
8.5.3 Interchangeability 54
8.6 Allowable bearing journal defects 54
8.6.1 Complete journal 55
8.6.2 Inner bearing to outer bearing position 55
8.6.3 Striations 55
8.6.4 Scores 55
8.6.5 Tears 55
8.6.6 Dents / dings 56
8.6.7 Cone scores 56
8.6.8 Circumferential pitting 56
8.6.9 Pitting 56
8.7 Reclaiming axle journals by electro chemical metal deposition (ECMD) 57
8.8 Requalification of package unit bearing adaptors 57
8.8.1 General 57
8.8.2 Adaptor wear gauge 58
8.8.3 Inspection 58
8.8.3.1 General inspection 58
8.8.3.2 Crown measurement 58
8.8.3.3 Thrust shoulder 59
8.8.3.4 Adaptor machined relief 59
8.8.3.5 Adaptor body wear 60
9 Greasing of bearings 61

9.1 Bearing greasing policy general 61
9.1.1 General 61
9.1.2 General working 61
9.1.3 Restrictions 61
9.1.4 Application of policy 61
9.2 Bearing greasing colour codes 62
9.2.1 General 62
9.2.2 Colour coding at greasing 62
9.2.2.1 Axlebox bearings 62
9.2.2.2 Package unit bearings 63
9.2.2.3 Matching of wheelsets 63
9.2.3 Paint quality 63
9.2.3.1 Brushing 63
9.2.3.2 Pressure pack 63
9.2.3.3 Colour 64
9.2.4 Paint application 64
9.2.4.1 Preparation 64
9.2.4.2 Application 64
9.3 Method of greasing bearings 65
9.3.1 General 65
9.3.2 Terminology 65
9.3.3 Calibration 65
9.3.3.1 Measured weight 65
9.3.3.2 Time basis 65
9.3.4 Grease nipples 66
9.3.5 Grease quantity 66
9.3.6 Grease type 66
9.3.7 Greasing axleboxes 66
9.3.7.1 Greasing bearings fitted with grease nipples using a calibrated grease gun. 66
9.3.7.2 Greasing axleboxes through a nipple without a calibrated grease gun 66
9.3.7.3 Greasing axleboxes not fitted with grease nipples using a calibrated grease gun (Measured weight system) 67
9.3.7.4 Greasing axleboxes not fitted with grease nipples with a calibrated grease pump (Time or measured weight system) 67
9.3.7.5 Greasing axleboxes not fitted with grease nipples without a calibrated grease pump. 67
9.3.7.6 Greasing package unit bearings 68
10 Checking bearing lateral play 69
10.1 Procedure 69
10.1.1 Package unit bearings 69
10.1.1.1 Axlebox bearings 69
10.1.2 Lateral play limits 70
11 Checking roller bearings following a derailment 71
11.1 General 71
11.2 Inspection 71

11.2.1 Major derailments 71
11.2.2 Minor derailments 71

12 Bearing rumble rest 72
12.1 General....72
12.2 Rumble test 72

13 Bearing reconditioning facilities 74
13.1 Quality assurance and records 74
13.2 Handling and transport....74
13.3 Gauges....74

1 Introduction

All RailCorp infrastructure maintenance freight vehicles are to be maintained to the freight rolling stock maintenance standards.

2 Scope

This standard covers the inspection, requalification, remanufacture and greasing of bogie axle bearings.

3 Application

This standard is to be used by maintenance staff when inspecting, requalifying, remanufacturing and greasing bogie axle bearings.

4 Reference documents

4.1 RailCorp standards

ESR 0040	Inspection of freight bogies
ESR 0330	Wheel defect manual
ESR 0331	Wheel & axle reference manual
ESR 0400	Specification for journal bearing & multi purpose grease

4.2 RailCorp drawings

201-923	Axlebox tread gauge
304-751	Adaptor wear gauge
307-038	Axlebox greasing fixture
307-214	

4.3 Australian Standards

AS 1627.1	Metal Finishing – preparation and pretreatment of surfaces – removal of oil, grease & related contamination
AS 1627.4	Metal finishing – preparation and pretreatment of surfaces – abrasive blast cleaning
AS 2700	Colour standards for general purposes
AS 3902	

5 Bearing inspection

5.1 Vehicle in service

Bearings must be inspected according to section 8 for package unit bearings or ESR 0040 for axleboxes.

5.2 Transported wheelsets

Any wheelset or bogie received from workshops, or any other locations, to go into service, must have a visual inspection for bearing damage, due to transportation according to section 5.

5.3 Before installation into bogies

Any vehicle that has had a bogie, wheel set or bearing change, the bearings must be fully inspected according to section 5 for package unit bearings or ESR 0040 for axleboxes.

5.4 DI Inspections

Bearings must be inspected according to section 8 for package unit bearings or ESR 0040 for axleboxes. The DI inspection is carried out during R2 inspections.

5.5 Following Derailment

Following derailment bearings shall be inspected as detailed in Section 12.

6 Wheelset attention

At the overhaul, turning or service of any wheelset, the bearings must be inspected according to Table 1.

Freight bogie type	**Period** Installation or BI date taken as that stamped on bearing or box, if missing, year of wheel serial number (See ESR 0331)	**Bearing type**		**Procedure**
		Package Unit	Axlebox	
All except as indicated in this table	6 years from installation on axle or BI date	Remove and overhaul (see section 6.1 for exception)	Not applicable	Section 8
	Wheel turn	Rumble test and inspection (see section 6.1 for exception)	Rumble test and inspection	Section 11 and Section 7 or Section 8
	Wheel off	Remove and overhaul	Remove and overhaul	Section 7 or Section 8
	Class 3, 4 or 5 skid as shown in ESR 0330	Remove and overhaul	Remove and overhaul	Section 7 or Section 8
	Class 4 or 5 scale as shown in ESR 0330	Remove and overhaul	Remove and overhaul	Section 7 or Section 8

Table 1

6.1 Wagons re-entering service or travelling low kilometres

Wagons fitted with package unit bearings may remain in service past the 6 year limit provided all the following is complied with:

- Flange thickness must be 24 mm or greater
- Bearings must be inspected according to section 8
- A rumble test must be conducted according to section 11.
- Locking plates at both ends of the axles are to be stamped BI MM/YY and location e.g. BI 04/01 WCK.

Wheelsets sent for re-turning with locking plates stamped by a repair depot (as above) must have the bearings removed and overhauled

7 Spherical axle box bearings

7.1 Terminology

The terminology used in this specification is detailed below with a typical bearing shown in Figure 1.

- Outer Ring — Cup or Outer Race, Outer Cup
- Inner Ring — Cone or Inner Race, Inner Raceway
- Raceways — Surface of outer and inner ring on which rollers operate
- Rollers — Cylindrical Rollers or Tapered Rollers, Rolling Elements
- Cage — Retainer, Separator
- Bearing assembly — Inner and Outer Rings with Rollers and Cage

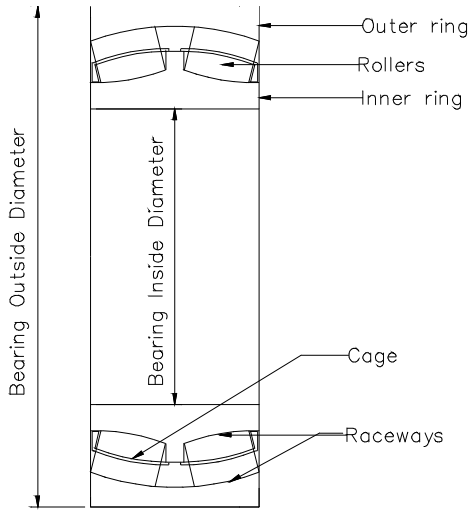

Figure 1

7.2 Roller bearing general requalification

7.2.1 Reconditioning facilities

Bearing reconditioning facilities must comply with the requirements of section 13.

7.2.2 Cleaning

Prior to cleaning, bearings are to be demagnetised to a level less than 20 x 10-4 Teslas using a method that does not alter the metallurgical structure of the bearing.

Bearing assemblies shall be washed in accordance with AS 1627.1.

Bearings shall be cleaned so as to remove all traces of grease and dirt so that a thorough inspection of the bearing may be carried out. This may be accomplished through automatic cleaners, washers, agitators or spray systems. The cleaning media must not be harmful to roller bearing parts.

Should agitating type washer be used only bearing assemblies are to be cleaned in the tank at the one time. Should continuous spray type washers be used parts other than bearing assemblies may be washed in the washer provided the cleaning media is filtered before reuse.

Sandblasting, or any abrasive type cleaning method, must not be used for any bearing parts.

The effect of any cleaning media used is to be neutralised following washing.

All cleaned components are to be rust protected immediately after washing. Short term rust preventative's may be used provided that, before inspection, the manufacturers recommended time period for rust protection is not exceeded. The rust preventative should provide a thin transparent film so as not to interfere with the inspection process.

The date of application of the short term rust preventative is to be kept with any batch of bearings and if the recommended protection period has expired that batch shall be recoated. Cleaned components, before inspection, are to be stored in a manner that precludes the formation of any corrosion due to the washing and storing process and protected from dirt contamination.

7.2.3 Inspection

7.2.3.1 Specified limits

Specified limits shall be taken as those from the referenced document.

If a standard does not cover a specific bearing then it is acceptable to use limits from the OEM manufacturer, confirmed in writing, for dimensional tolerances. Any OEM supplied tolerances shall also be supplied to the Principal.

7.2.3.2 Measurements

Measuring instruments used to measure the bearing inner and outer rings shall be checked at least daily against a certified master.

Measurements shall be taken at the same temperature as the bearing being measured unless appropriate compensation is made for the temperature difference between the master disc and the bearing being measured.

Masters used in the calibration of gauges are to be at least Class X tolerance grade to ANSI/ASME B47.1 for setting discs and ANSI/ASME B89.1.6.M for setting rings.

Dial or digital reading devices shall be graduated in at least 0.001 mm graduations.

Masters shall be certified at least yearly by a qualified metrology laboratory registered by NATA.

7.2.3.3 Outer ring

Bearing outside diameter pickup shall be removed by linishing and polishing so that the outside surface finish does not exceed 0.8 Ra.

Check outside diameter using a snap gauge or other repeatable measuring device at 3 locations 120 degrees apart. Scrap the roller assembly if the outside diameter exceeds the limits specified.

Inspect raceway for defects listed in Section 7.2.4, and if bearing raceway cannot be reworked to within limits for each defect using procedures listed under each defect, then the bearing assembly shall be rejected.

Bearing series	Outside diameter mm Average on three measurements	Outside diameter mm No individual measurement to exceed
23124C	200.000 - 199.970	200.008 - 199.962
229750	220.000 - 219.970	220.008 - 219.962
230906	220.000 - 219.970	220.008 - 219.962
231019	250.000 - 249.970	250.008 - 249.962

Table 2 Outer ring dimensional limits

7.2.3.4 Inner ring

Any corrosion on the inner ring bore shall be removed prior to measuring.

If scoring/pickup (positive metal) is present it shall be removed by localised grinding provided that the local inside diameter is not increased by more than 0.010 mm above the immediately adjacent land area. Areas ground in this way must not exceed 20% of the total bore circumference.

Fretting on bores (where bore size in local areas is greater than the specified limit but in local areas only). Where fretting exists from one side of the inner ring and the fretting extends for more than 30% of the ring width the bearing assembly shall be rejected. Where fretting exists that does not extend to the side of the inner ring then the allowable width of inner ring that may be affected by fretting shall be 50%.

Check inner bore diameter using a bore gauge or other repeatable measuring device at 3 locations 120 degrees apart. Scrap the bearing assembly if the inner bore diameter exceeds the limits specified and cannot be qualified under fretting and pickup allowance.

Inspect the inner raceways, with the aid of a feeler probe where possible, for defects listed in Section 7.2.4 and if the bearing raceway cannot be reworked to within the limits for each defect using procedures listed under each defect the bearing assembly shall be rejected.

Bearing series	Inside diameter mm Average of three measurements	Inside diameter mm No individual measurement to exceed
23124C	120.000 - 119.980	120.005 - 119.975
229750	130.000 - 129.975	130.006 - 129.969
230906	131.796 - 131.771	131.802 - 129.765
231019	144.475 - 144.450	144.481 - 144.444

Table 3 Inner ring dimensional limits

7.2.3.5 Rollers

Inspect the full contact area of each roller for defects listed in Section 7.2.4, subject to the following clause, and if rollers cannot be reworked to within limits for each defect using procedures listed under each defect the bearing assembly shall be rejected.

Any degree of spalling, scoring, smearing, peeling or Brinelling on rollers is unacceptable and no attempt should be made to rework these defects. If any evidence of such damage on rollers is found, the bearing assembly shall be rejected.

If any rollers are missing the bearing assembly shall be rejected.

7.2.3.6 Roller/outer ring radial clearance

The total diametrical radial clearance is to be measured at three locations 120 degrees apart using feeler gauges between the roller and the raceway of the outer ring and is not to exceed the limits specified.

7.2.3.7 Cage

Inspect the cage for loose rivets, cracks or damage. If any defects are found the complete bearing shall be rejected.

7.2.3.8 Roller/cage clearance

The cage rib to roller clearance is to be measured at three locations approximately 120 degrees apart using feeler gauges. Scrap if clearance is greater than that specified. Where rollers can fall out during normal handling the bearing shall be rejected.

7.2.4 Defects and rework of bearings

7.2.4.1 Etching

Grey or greyish black colour , caused by water or acidity in the lubricant . It has no depth. Superficial water or acid etching, as shown in

Figure 2 Water **etching**. Water etching is acceptable after surfaces have been polished with a wire wheel or 320 grit abrasive cloth and the etching removed.

7.2.4.2 Stain discolouration

Surface discolouration caused by moisture or acidity in the lubricant . It has no depth . Stains and discolouration having no depth, as shown in Figure 4. Stain discolouration is not considered detrimental and is acceptable if it can be removed by polishing with 320 grit abrasive cloth or finer or with a wire wheel or polishing wheel that does not remove metal.

7.2.4.3 Corrosion pitting and rust

Black corrosion lines or pit marks as shown in Figure 6. It can have some depth. Corrosion is a build up of iron oxide, sometimes due to finger prints and is a form of advanced etching. If possible, this type of corrosion shall be removed using the same method as for etching.

More advanced corrosion shall be repaired in the same manner and under the same limitations as fatigue spalling.

7.2.4.4 Heat discolouration

Colour visible from faint straw to dark blue may be an indication of overheating. Heat discolouration should not be confused with lubricant stains or the dark coating used on some parts by some manufacturers. Before being rejected, overheating shall be verified

by attempting to remove it with 320 grit abrasive cloth or finer. Overheated bearings shall be rejected.

7.2.4.5 Fatigue cracks, fatigue spalling or flaking

Minute cracks in load carrying surfaces are the first indication of metal failure. Fatigue spalling, as in, Figure 3, and Figure 5, or flaking originates as minute fatigue cracks and eventually pieces of metal breakaway. This occurs on the roller path of inner and outer rings and on roller surfaces.

Spalling on rollers is an unrepairable defect.

Small spalls on inner and outer raceways as shown in Figure 3, may be repaired by grinding as noted below and returned to service. If a spall results in a repaired spall greater than 6mm on any side by 2mm deep, the part shall be rejected and not returned to service. An original spall which is greater than 1.5mm in diameter before repair, shall be rejected without attempting repair.

A small portable hand grinder may be used to repair spalled areas as follows:-

All loose material should be ground away and the edges of the ground area rounded with 320 or finer grit abrasive cloth .The bottom of the spalled area need not be polished smooth. Not more than two spalls of maximum size 6mm on any side by 2 mm deep after repair by grinding are permitted in a 50 mm circumferential section of a raceway. A bridge, 4.8mm long minimum, must be left between two small spalls after grinding, except if spalls have run together. A final maximum dimension of 6 mm in length by 2 mm in depth is allowable .The total number of repaired spalls shall not exceed 6 in any raceway. Fine abrasive grinding wheels, approximately 8 mm or less in diameter should be used for the grinding out of bearing spalls.

If the raceway of a bearing inner ring is spalled (where roller assembly is non separable), this part is not reusable except small spalls on the raceway , not more than 1 mm by 1mm in size are acceptable for further service provided the circumferential limitations and total number of spalls does not exceed that for outer rings .

Fatigue cracks shall be treated as spalls and rejected or reworked under the same conditions.

7.2.4.6 Fracture

Any crack, except fatigue cracks (see fatigue cracks) on the inner or outer ring or a roller shall be cause for component rejection.

7.2.4.7 Nicks

Surface damage due to rough handling or other abuse should be ground down with a fine small abrasive grinding wheel, if raised, so that no part of the nick lies above the adjacent bearing surface.

7.2.4.8 Peeling

Condition caused by minute particles of metal peeling away from original surface.

Bearing outer rings and inner rings having very shallow peeling, less than 0.025mm (0.001"), on the raceway or roller diameter, as shown in Figure 9, may be returned to service after peeling has been removed by polishing with 320 grit abrasive or a wire wheel.

7.2.4.9 Smearing

Surface roughness caused by transfer of metal from one surface to another as a result of galling. This can be caused by rollers sliding on roller path because of adverse lubricating conditions.

Bearing outer rings and inner rings having very shallow smearing, less than 0.025mm (0.001"), on the raceway as shown in Figure 7 Smearing, is acceptable after smearing has been removed by polishing with 320 grit abrasive cloth or a wire wheel.

7.2.4.10 Brinelling

Surface indentations in raceways made by rollers under impact load as shown in Figure 12. Parts from each bearing must be kept together during disassembly, cleaning and inspection to ensure proper identification of the mating parts to enable adequate disposition for Brinelling. Brinelling is caused by the rollers being forced into the surface of either raceway while the bearing was subjected to heavy impact loading beyond its capacity.

Bearing Outer Ring - If the length of a Brinell mark is less than half the width of the raceway and if its width at its widest point does not exceed 2 mm the bearing outer ring is acceptable for further service . If the length of a Brinell mark is more than half the width of the raceway and if its width at the widest point does not exceed 1.5 mm the bearing outer ring is suitable for further service. The total number of Brinell marks shall not exceed 10.

Bearing Inner Ring - Brinelling on bearing inner rings may be considered acceptable for further service if the mating bearing outer ring raceways are suitable for further service. However if the mating bearing outer raceway has been rejected because of Brinell marks, the complete bearing assembly must be scrapped.

7.2.4.11 Indentations

Visible recesses on surfaces of raceways or rollers, also called fragment indentations. Caused by foreign matter passing through bearing while loaded. Surface damages as shown in Figure 8 usually caused by contaminant in the lubricant, is not a cause for rejection unless the damage is such that roughness can be detected when the bearing is rotated by hand.

7.2.4.12 Electric burns

Surface damage from the passage of electric current causing localised craters, pits, flutes or corrugations.

"Major" pitting as shown in Figure 10, and Figure 11, is the result of electric current passing through the bearing, such as when the ground cable is clamped to the rail or wheel for arc welding repairs on cars. Parts so affected with electrical pitting, greater than 1mm in diameter, shall be rejected.

Fluting or corrugations as shown in Figure 13, result from electric current passing through a rotating bearing. Bearings so affected shall be rejected.

During operation in electrified territories, even if the operating equipment is fitted with ground shunts to prevent stray current passage through the bearings, railroad bearings may incur "minor" electric arc pitting as shown in Figure 14.

No minor electrical pit is to be greater than 0.6 mm in size. This can be measured by comparison to a 0.6 mm probe under a magnifying viewer used to inspect bearings. Any minor electrical pit greater than 0.6 mm in diameter shall be cause for component rejection.

Electrical etching that forms a line, with the pits spaced between 0.5 mm to 3 mm apart is known as a string. Circumferentially around a raceway no more than two strings are allowed. Around a roller no more than one string is allowed. Strings forming a band wider than 1mm shall be cause for component rejection.

Electrical pits shall be considered a group if contained in an area 3 mm by 3 mm. No two groups are to be closer than 10 mm apart.

7.2.4.13 Scoring

Parallel or concentric grooves which penetrate the original surface .They can be circumferential or axial. Scoring may be repaired in the same manner and under the same limitations as fatigue spalling.

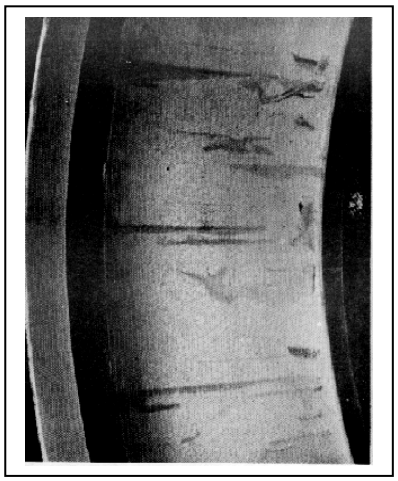

Figure 2 Water etching

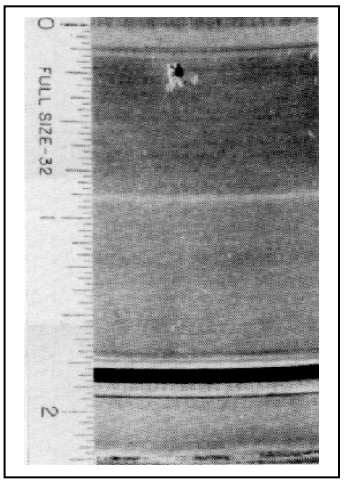

Figure 3 Spall on raceway

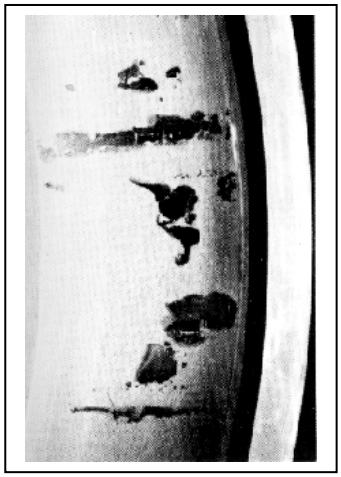

Figure 4 Stain discolouration

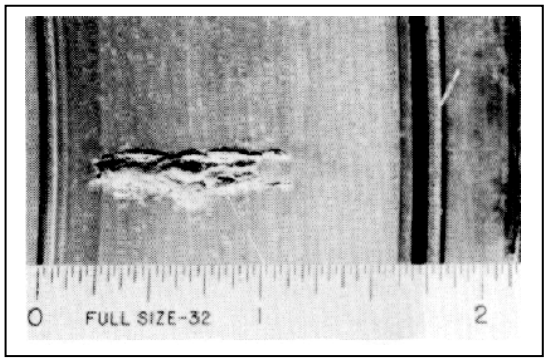

Figure 5 Unrepairable spall

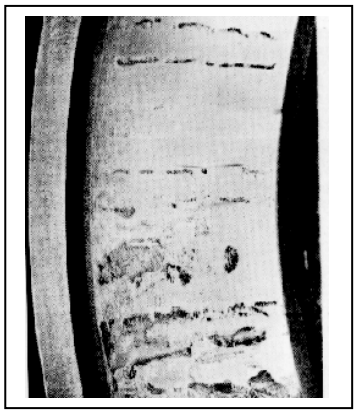

Figure 6 Corrosion

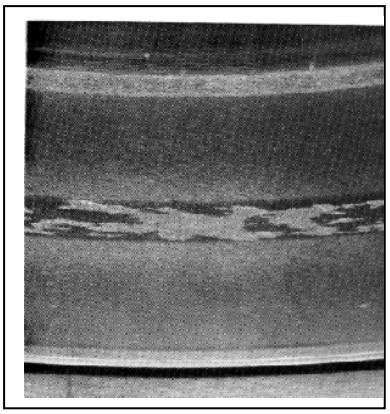

Figure 7 Smearing

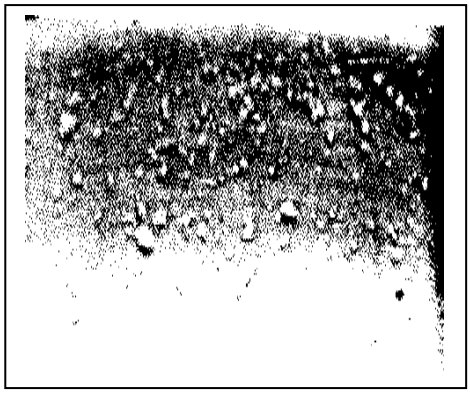

Figure 8 Indentations

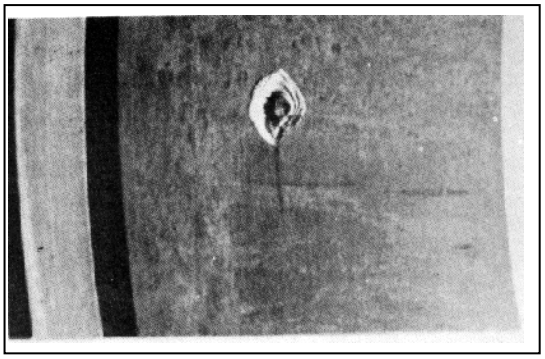

Figure 9 Peeling

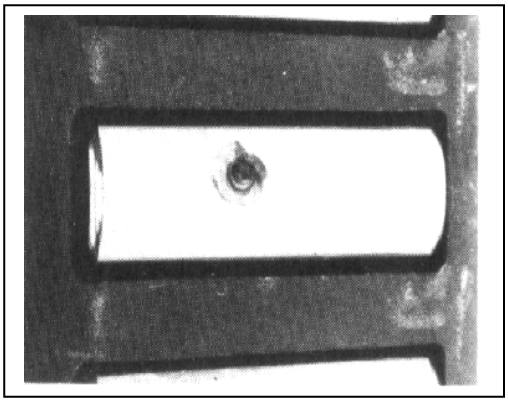

Figure 10 Electrical arc on roller

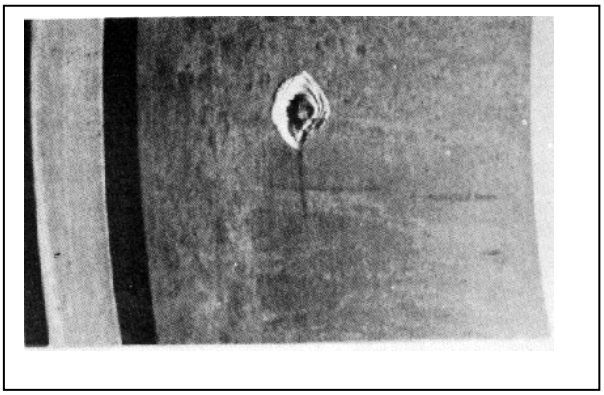

Figure 11 Electrical arcing

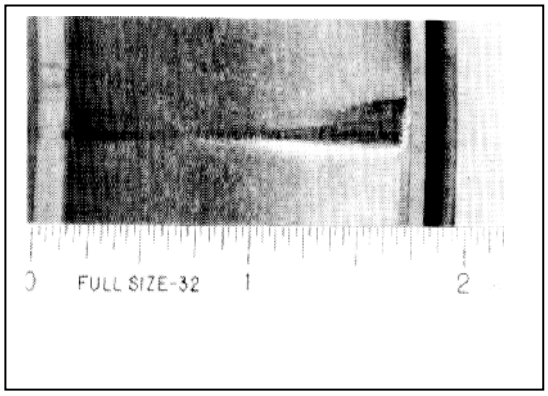

Figure 12 Brinell

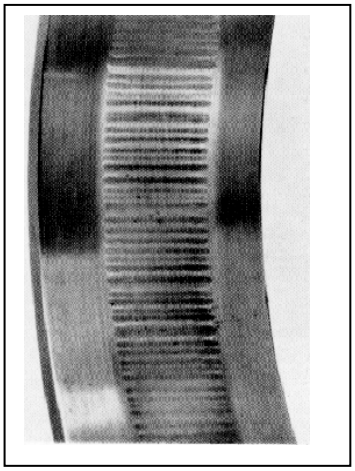

Figure 13 Fluting

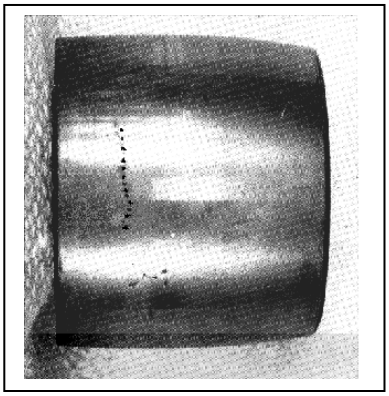

Figure 14 Electric arc stringing

7.2.5 Cleaning of bearings after rework

Any bearing that has to be reworked shall also be recleaned to remove all traces of abrasive material used and produced during the reworking operation.

7.2.6 Marking of bearings

For every bearing being remanufactured the approved Repairing companies initials code and month and year of inspection are to be etched onto the side of the outer ring as per figure 15 immediately in front of the brand or previous etching. Do not etch onto a load bearing surface. Steel stamps or electric etching are not acceptable. Care is to be taken to ensure that metallic particles from the etching process do not contaminate the bearing. Do not obliterate any previous etching.

Repairers codes are available from RailCorp.

XXX 02-12
Repairers Code Date of repair

Figure 15

If no existing serial number exists then a serial number shall be etched onto the outer ring next to the manufacturer and year of manufacture (as marked at manufacture).

7.2.7 Rust prevention following inspection

If the inspection and bearing installation processes are to be carried out in the same workshop area then it will be sufficient to protect the bearing assemblies with a short term rust preventative provided that, before installation, the rust preventative manufacturers recommended time period is not exceeded.

If the inspection and bearing installation processes are to be carried out at different locations or by different companies or if the time period between the two processes is unknown then the bearing assemblies shall be protected by a rust preventative treatment capable of providing six months protection in an indoor workshop environment.

The rust preventative shall not require removal before bearing installation and shall not inhibit normal bearing operation when heated to 150 degrees Celsius and cooled when bearings are installed on axles. It must be compatible with the grease being used.

Bearings shall be enclosed in suitable individual plastic bags, or if stored and transported in bulk containers, the container may have a large fully enclosing plastic liner. Plastic bags shall be of a suitable size to fully enclose the bearings and to protect the bearings from the ingress of dirt and moisture. The plastic bags shall not be able to be torn or their effectiveness reduced during the normal handling of the bearings.

7.2.8 Storage

New or overhauled bearing assemblies shall be stored in their plastic bags or protective boxes until ready for installation.

Individually wrapped bearings are to be stored on racks or in cupboards that are clean and well protected from dust and moisture no less than 30 cm from the ground. Bearings in bulk containers are to be stored raised from the ground e.g. on pallets.

Bearings shall not be stored in the same area as a bearing wash area or where other harmful chemicals are stored. Bearings are not to be stored in direct sunshine.

Bearings are not to be stored in areas where there is the possibility of a high moisture exposure e.g in large open type sheds, close to doorways, areas of high draft from outdoor areas, or in the vicinity of air conditioning systems or hot water piping.

Bearings shall be stored to prevent damage from external vibration.

7.2.9 Information required

The information required for the requalified bearings shall be as specified in Table 4.

The format and transfer of the information between the repairer and the workshop shall be determined by the workshop.

Where information is not available an X is to be used in the space.

Field	Field name	Field type	Field length
1	Series	Character	6
2	Manufacturer	Character	1
3	Year of manufacture	Numeric YYYY	4
4	Serial number	Character	11
5	Date of first installation	Date (YYYYMM)	6
6	Repairers code	Character	3
7	Status Accept A Reject R	Character	1
8	Reject reason 1 (See Table 6)	Character	2
9	Reject reason 2 (See Table 6)	Character	2
10	Rework reason 1 (See Table 6)	Character	2
11	Rework reason 2 (See Table 6)	Character	2

Table 4

7.2.9.1 Series

Component series shall be as detailed in Section 8.5 for package unit bearings and Section 7.6 for axlebox type bearings.

7.2.9.2 Manufacturer code

Koyo	K
SKF	S
FAG	F
NSK	N
NTN	C
STEYR	Y
TIMKEN	T
BRENCO	B
RHP	R
NACHI	A

Table 5 Manufacturer code

7.2.9.3 Serial number

For bearings that do not have a serial number allocated by the manufacturer a serial number will be required to be allocated and engraved on the bearing.

If a bearing has already been allocated this form of serial number, as shown in Figure 15, then this number shall be used.

The serial number shall comprise of the Repairers code, the year of serialising, and the next allocated number.

From year to year the next allocated number may be used again as the year will be different.

XXX 92 123456
Repairers Code Year of serialising Next allocated number

Figure 16

7.2.9.4 Date of first installation

If the date of first installation is not available then the date of manufacture is to be used in this field.

7.2.9.5 Repairers codes

Repairers codes will be allocated by the Principal.

7.2.9.6 Reject/rework reason codes

Etching	01
Stain discolouration	02
Corrosion Pitting and Rust	03
Heat Discolouration	04
Fatigue Spalling, fatigue cracks or flaking	05
Fracture	06
Nicks	07
Peeling	08
Smearing	09
Brinelling	10
Indentations	11
Electric Burns	12
Scoring	13
Bearing O.D measurement	14
Bearing I.D measurement	15
Cage to roller clearance	16
Radial Clearance	17
Handling Damage	18
Other	99

Table 6 Reject/rework reason codes

7.3 Requalification of freight axleboxes

7.3.1 General

Axleboxes are required to be inspected so that they provide suitable support for the bearings in service and allow the grease to be retained in the axlebox and to keep contaminants out.

If grease nipples and gas plugs can fall out in service they can cause loss of grease and bearing failure.

This section details the requirements for the overhaul of 9R axleboxes.

An axlebox shall be considered to be all parts as shown in Section 7.4.

7.3.2 Components

Only part numbers that are listed in Section 7.4 to be used in the overhaul of axleboxes.

7.3.3 Handling

Axleboxes and components shall be handled and transported to prevent any damage to components.

7.3.4 Dismantling

Axleboxes are to be fully dismantled prior to inspection.

Grease nipples and gas plugs are to be removed.

Back cover assemblies (top and bottom) shall be kept together as a set.

7.3.5 Cleaning

Axlebox assemblies are to be thoroughly washed in accordance with AS 1627.1.

The cleaning method to be used is alkaline dip with mechanical agitation (ADM) unless it can be shown that another process will give similar cleaning results without damage to any of the parts.

All dirt and grease shall be removed from the inside of the axlebox.

It is permissible for a small amount of hardened grease to remain in crevices on the outside of the axlebox provided that the grease or dirt is not loose and cannot fall away, particularly during installation.

All other components shall be cleaned to remove all visible grease and dirt.

The front face of the axlebox shall be sufficiently clean for subsequent painting.

Following cleaning, all components are to be suitably protected from corrosion.

7.3.6 Inspection

7.3.6.1 Housing

Axlebox housings must be cleaned and inspected for damage and external wear. This is not to exceed 1.5 mm at any point unless otherwise specified.

Axleboxes shall be inspected for any signs of cracking. External damage or wear shall not be repaired by welding.

7.3.6.2 Inner bore

The inner bore of the axlebox shall be measured in at least the locations shown in Figure 17.

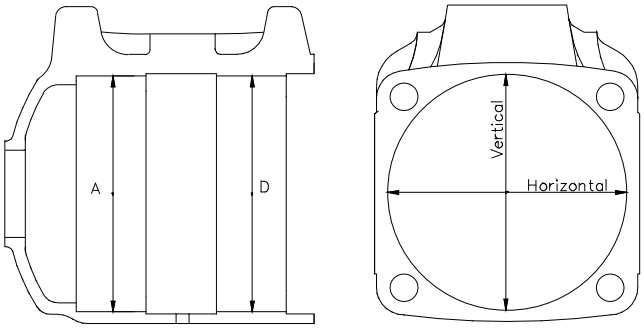

Figure 17

The inner bore shall conform to the requirements of Table 7.

Axlebox Code	Vertical measurement mm	Horizontal measurement mm	Taper A to D mm
9R	220.000 220.254	220.000 220.076	0.060

Table 7

Axlebox bores outside these limits may be reclaimed by the procedure specified in Section 7.5.

7.3.6.3 Crown height

Measure the axlebox crown height in relation to the top of the axlebox, dimension X, as shown in Figure 18, on 9R axleboxes.

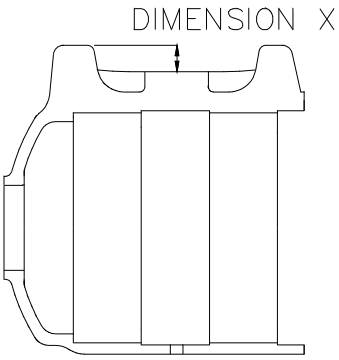

Figure 18

Axlebox Code	Koyo	SKF
9R	31.75	28.85

Table 8

This should not exceed the limits shown in Table 8.

7.3.6.4 Longitudinal wear face

Axlebox Type	Minimum Dimension
9R	241.4 mm

Table 9

Measure the longitudinal wear faces across the axlebox as shown in Figure 19. Limits are given in Table 9.

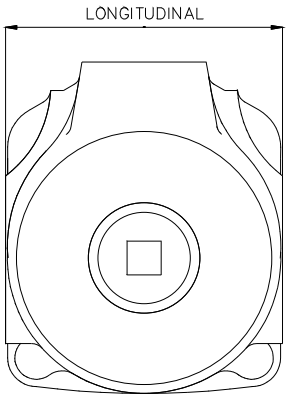

Figure 19

7.3.6.5 Axlebox gas plug thread

Visually check the axlebox gas plug thread for thread condition.

If suspect check with thread gauge to drawing 201-923.

If damaged, retap thread if possible, to restore the thread. Check retapped threads with the thread gauge (201-923).

7.3.7 Backcover

Inspect the back cover assembly for signs of wear, mismatching of machined halves, cracking or distortion. Remove any burrs that could prevent the assembly from sealing against the housing.

Scrap any that cannot be repaired.

7.3.8 Collar

Inspect the collar for signs of cracking scoring or burrs. Remove any burrs if possible to reclaim the collar.

Scrap any that cannot be repaired.

7.3.9 Studs

Axlebox studs shall be checked for straightness and thread condition. If threads are damaged they should be repaired by retapping, if possible, otherwise replaced.

Studs are considered satisfactory if a nut can be run easily down the thread.

7.3.10 Grease nipples

All axleboxes shall have a grease nipple attached and in serviceable condition.

The grease nipple hole should be checked so that when the grease nipple is tightened the grease nipple tightens on the tapered thread only, and the bottom of the head does not make contact with the axlebox.

Check the operation of the grease nipple plunger to see that it is similar to that of a new grease nipple and the nipple is not blocked. Check that the nipple is of an approved type.

7.3.11 Gas plugs and seals

Inspect the gas plug for damage and check the condition of the thread.

Check the gas plug thread with thread gauge to drawing 201-923.

Reject any that are damaged if the thread cannot be restored.

On plugs that are acceptable fit a new seal.

7.3.12 Grease nipples

Any axleboxes that do no have grease nipples shall be modified to have grease nipples fitted.

Grease nipples shall be fitted by drilling and tapping into the centre band of the axlebox so that grease can be pumped into the cavity between the two bearings. The angle of the grease nipple from the vertical shall be as shown in Figure 20 and Table 10

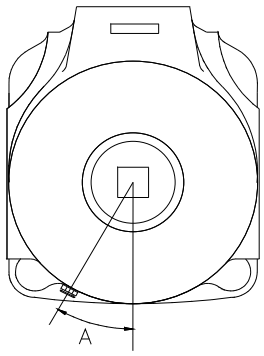

Figure 20

Axlebox Code	Angle A (degrees)
9R	40

Table 10

Drilling and tapping shall only be carried out after removal of the axlebox from the bearing assembly.

All swarf must be removed following drilling and tapping.

7.3.13 Packaging

A rust preventative shall be applied to all machined surfaces suitable for protection for a period of one month according to manufacturer's specifications.

The protected axleboxes shall be wrapped and sealed in plastic to protect the axlebox from dirt and moisture.

Axleboxes shall be stored and transported so that damage to the axlebox is prevented.

7.4 Axleboxes components

This specification details approved axlebox components for 9R, 15R and 18R axleboxes

7.4.1 9R axlebox

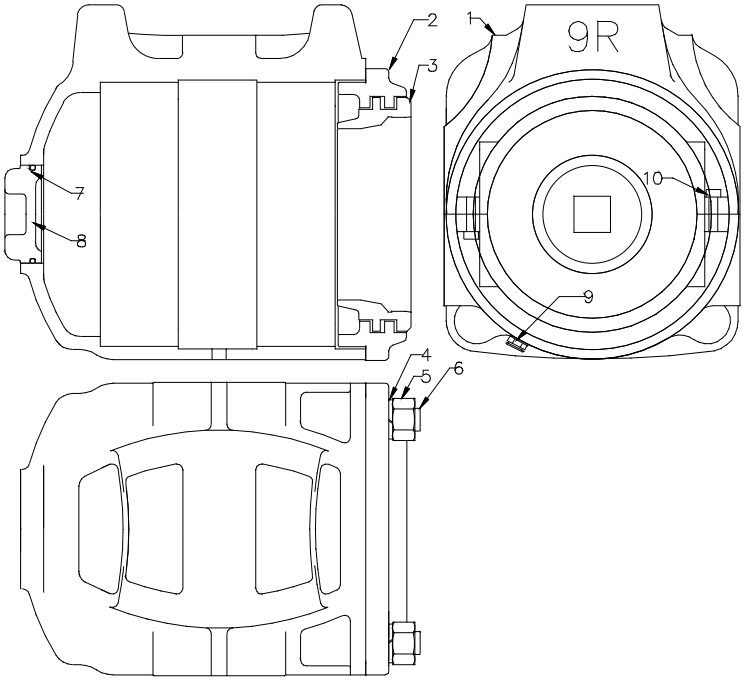

Figure 21 9R Axlebox

Item	Description	Koyo Part No	SKF Part No	Other
1	Axlebox Body	O-R 12762-3	1935882	
2	Back Cover	O-R 12762	1777559	
3	Collar	O-R 13430-2	1776577	
4	Washer	O-R 12127-7	1935881-9	3/4 B.S.W Heavy ANSI B.27.1
5	Nut	O-R 12127-7	1935881-8	3/4 B.S.W AS 2451
6	Stud	O-R 12127-7	1776220	3/4" B.S.W 10 TPI 1 1/4* 1 1/8
7	Seal	O-R 13430-4	1777059	SRA 99446
8	Gas plug	O-R 13430-4	1777059	SRA 99445
9	Grease nipple		1935881-10	Alemite A-1186-B 1/4 " B.S.P
10	Hex head capscrew	O-R 12127-7		5/16"x1 1/4"
10a	Thread to suit back cover ANSI B 18.3 1960 series		704342	1/4"x1 1/4

Table 11 -9R Axlebox components

7.5 Reclaiming axleboxes by metal spraying

This section covers the reclaiming of axleboxes by the method of metal spraying using the twin arc method

This method is only to be applied to axleboxes that have no parts welded to the axlebox or do not require the application of heat in the reconditioning process.

The facility carrying out the metal spraying must have quality accreditation to AS 9002 or a quality rating of B or better.

7.5.1 Preparation

Liners and grease nipples to be removed.

Boxes to be washed in accordance with AS 1627.1 using the alkaline dip process with mechanical agitation to remove all traces of grease and dirt.

Boxes to be heated in oven at 350 degrees C for 15 minutes.

Boxes to be inspected for grease egress. If grease egress is found, continue baking at 350 degrees for 15 minute intervals until no further grease egress is found.

Allow to cool to a minimum of 100 degrees C before pre-machining.

7.5.2 Preheat & pre-machining

7.5.2.1 Preheat

Preheat before machining.

Boxes are to be preheated to 100 degrees C before metal spraying.

7.5.2.2 Pre-machine

Machine axlebox bore in lathe to remove 0.75 - 1 mm on diameter with bearing land preparation as shown in figure 22 to prepare the bonding surface. Surface finish to be 3.2 Ra or rougher.

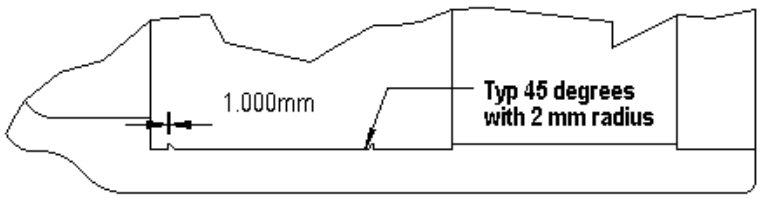

Figure 22 Cross section of axlebox bore preparation

7.5.2.3 Grit blasting

Box surface to be metal sprayed is to be grit blasted with G34 steel shot class 3. Grit blast to AS 1627.4.

The grit blast surface is not to come in contact with any object, mechanical or otherwise, before spraying. Spraying to commence within 15 minutes of grit blasting.

7.5.3 Masking

Areas to be masked

All threaded holes to be plugged with carbon inserts.

All non sprayed areas in the bore to be masked.

Axlebox back machined face to be masked.

7.5.3.1 Masking material

Metco antibond.

7.5.4 Spraying procedure

7.5.4.1 Bond coat

Bond coat to commence within 30 minutes of preheating.

Bond coat to be with material A1800 super bond or equivalent. Thickness to be 0.1mm to 0.15 mm.

7.5.4.2 Top coat

Material 1 wire 30 T and 1 wire 60T.

Top coat to commence within 10 minutes of bond coat. Box temperature not to exceed 200 degrees C.

Coat till 1 to 1.5mm undersize in bore.

7.5.5 Finishing

Machine bore to within 0.3mm on finished size.

All overspray to be removed.

Finish grind bores to new tolerance 0.8 micro metres or less.

Maximum coating thickness to be 1.5 mm.

7.5.6 Identification

Axleboxes that are reclaimed using this process are to be stamped with 4 to 6 mm high letters.

The axlebox casting surface is to be ground in the area shown in Figure 23 to provide a smooth area for stamping and the lettering is to be clear and legible.

The first two characters are to be MS for the metal spray reclamation process.

The 3rd to 5th characters are to be the company identifying initials.

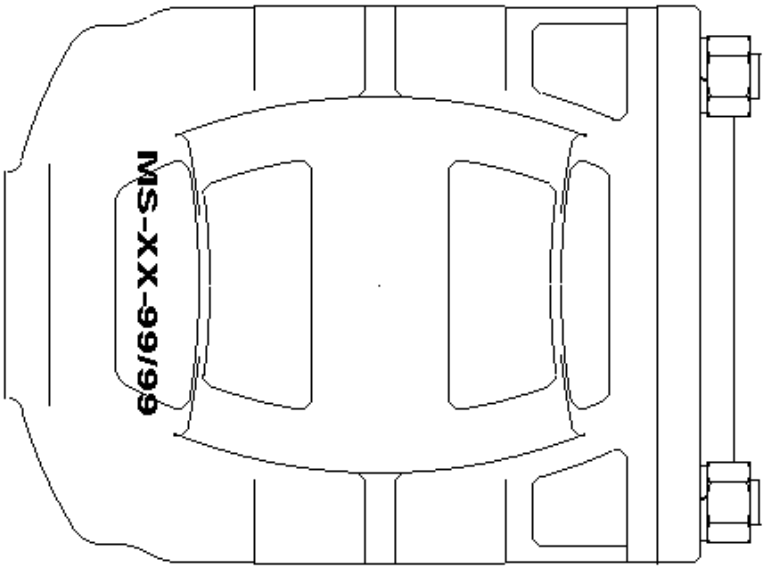

Figure 23 Axlebox identification

The last 4 characters are to represent the month and year of metal spraying the axlebox.

7.5.7 Approval

Any company carrying out metal spraying of axleboxes must be approved.

7.6 Axlebox bearing equivalent list

7.6.1 Freight axlebox bearings

Axlebox bearings only as listed may be used on freight axles.

The sizes quoted in this section are nominal only.

Code: 23124

Application	10R axleboxes	
Type	Spherical roller two row	
Description	120 * 200 * 62	
Clearance	C3	
Precision	Std	
Heat treatment	Std	Koyo special

Manufacturer	Part number	Alternative
SKF	23124CC/C3 VA350	23124JC3
NSK	23124 CC3	
KOYO	23124 RAS1C3	23124RHW33S1C3
FAG	23124EC3	23124ESTVPBC3
NTN	23124BL1C3	

Table 12

Code: 229750

Application	9R axleboxes	
Type	Spherical roller two row	
Description	130 * 220 * 73	
Clearance	C3	
Precision	Std	
Heat treatment	Std	Koyo special

Manufacturer	Part number	Alternative
SKF	229750JC3R505	229750 J/C3
KOYO	SR26227 RAS1C3	
FAG	502472D	502472A
NTN	2P2623C3	2P2604C3

Table 13

7.6.2 48 Class axlebox

Type	Spherical Roller
Description	139*218*80
Cage	Brass or Steel
Clearance	C3
Precision	Std
Heat treatment	Std
Loadrate	
Special	Drawing GA 83870 SKF 1782983

Equivalents

SKF 228285 C/C3

NSK 228285 C/C3

7.7 Requalification of bearing journals for axles fitted with spherical roller bearings

This section details the requirements for inspecting and measuring freight axle bearing journals prior to the installation of the bearings. Requirements for gauges and master gauges are also specified.

Measurement of axle bearings journals is necessary to provide sufficient clamp on the journal and to maintain the correct internal clearance in the bearing to minimise the risk of the bearing failing in service.

These requirements must be met any time prior to bearings being fitted to axles.

7.7.1 Diameter

7.7.1.1 Bearing seat areas

The journal diameter shall be measured in critical areas, as shown shaded in Figure 24, with the measurements of the areas taken from Table 14.

The diameter shall not vary more than 0.038 mm (0.0015”) and there shall be no abrupt changes or steps over the length of the journal.

A dial or digital snap gauge shall be rotated around the journal diameter at least 180 degrees within the bearing seat locations to obtain the maximum and minimum journal diameters.

The average diameter of each bearing seat shall be within tolerances specified in Table 17.

Care shall be taken when using temperature compensating snap gauges that rotation speed does not create sufficient heat, due to friction, to affect the readings.

There shall be no abrupt changes or steps over the length of the journal, including tapered or stepped end.

Undersized bearing journals may be repaired according to Section 8.7.

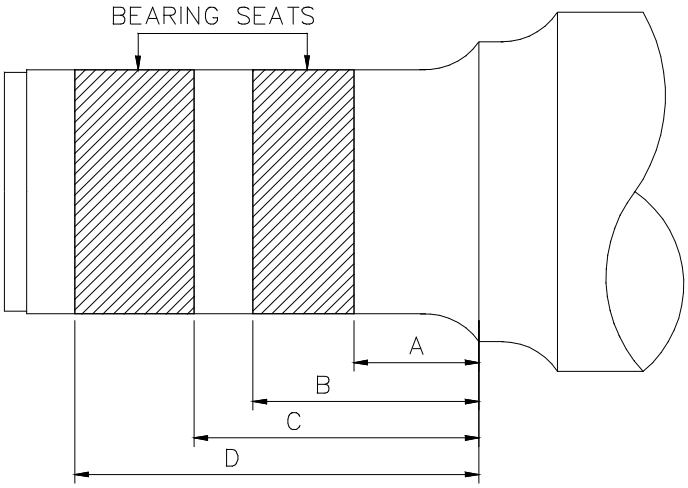

Figure 24

Axle type	Acceptance tolerances for second hand journal diameters		Dust guard diameter		Bearing seat locations (Dimensions in inches)			
	Maximum	Minimum	Maximum	Minimum	A	B	C	D
A118	130.068	130.043	161.900	161.798	41	115	164	238

Table 14

7.7.1.2 Measuring for upset journal ends

In order for a journal to be acceptable, the diameter in the area where upset can occur, as shown in Figure 25, must never exceed 0.076 mm (0.003”) above maximum tolerance in Table 14 but may be below the minimum tolerance.

A dial or digital snap gauge must be rotated 180 degrees around where the upsets occur.

Upset ends may be corrected as per Section 7.7.4.

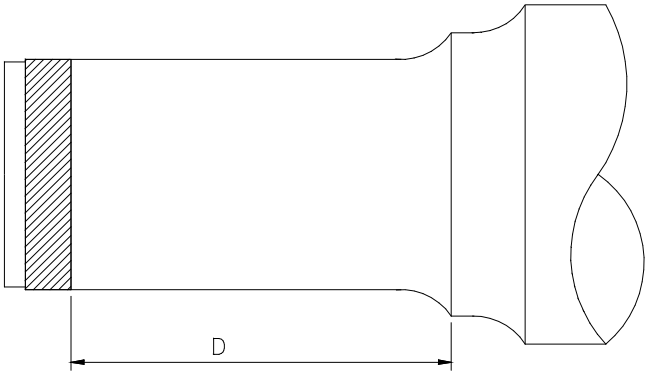

Figure 25

7.7.1.3 Dust guard diameter

The average diameter of each dust guard seat must be measured on the dust guard diameter, as shown in Figure 26, within tolerances shown in Table 14.

A dial or digital snap gauge shall be rotated around the dust guard diameter at least 180 degrees to obtain the maximum and minimum dust guard diameters.

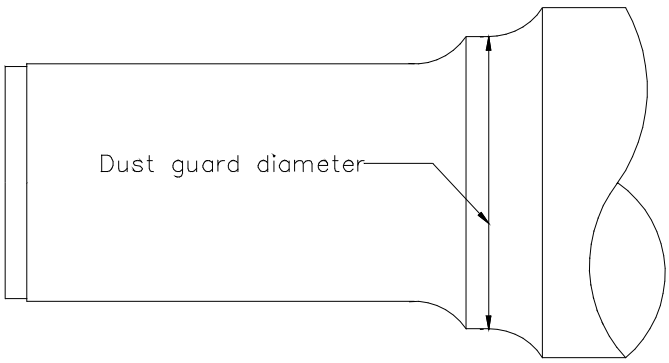

Figure 26

7.7.2 Fillet radius

Fretting corrosion on the journal fillet shall be removed with abrasive cloth, 80 grit or finer.

7.7.3 Axle journal damage

Any journal with depressions, surface defects, high spots or upset ends should be carefully refinished so as to remove them for the circumference and length of the journal.

For detailed requirements for journal damage see section 8.6.

Axle bearing damage may be repaired according to section 8.7.

7.7.4 Rework

Files may only be used to break sharp edges of end collars, dust guard seats, end of axles and to work down upset ends or surface defects of roller bearing axles providing the bearing seat diameters are not reduced below minimum and the surface roughness meets specifications.

Files must not be used on fillets.

Axle journal, journal fillet and dust guard seat must be cleaned whenever using abrasive cloth for cleaning, only 80 grit or finer is permitted.

7.7.5 Gauges

Dial or digital snap gauge, with at least 0.001 mm scale, must be used to measure journal diameter and must be calibrated using the master disc, at least class X tolerance grade to ANSI/ASME B.47.1.

Measurements shall be taken at the same temperature as the axle being measured unless appropriate compensation is made for the temperature difference between the master disc and the journal being measured.

7.8 Installation of axleboxes

Axleboxes and bearings are required to be installed correctly to ensure the correct operation of the bearing in service and to avoid bearing failure.

This section details the procedures for the installation of roller bearings and axleboxes onto freight vehicles.

7.8.1 Terminology

Where the term tightened is used in this section it is not intended for the torque on these nuts to be measured but values are provided as a guide. Suitable methods shall be used that have shown consistent results to be achievable.

Where the term torqued is used a torque wrench will be required to achieve the result.

7.8.2 Components and preparation

All bearings to be installed must be new to Section 7.7.1 or requalified, conforming to section 7.2.3.

All axleboxes must conform to the requirements of section 7.3.

All axle journals must conform to the requirements of section 7.7.

Anti fretting compound shall be a mixture of one part Rocol ASO to 8 parts hydraulic oil (ISO 32), SAE 40 or SAE 50 mineral oil to prevent fretting and other corrosion processes.

7.8.3 Bearing application

The axle shall be cleaned before mounting the bearing to the axle.

Heating equipment for the installation of bearings shall be either induction heater, oil bath with bearings not resting on the bottom of the bath or a bearing oven, or other method in line with manufacturer's recommendations.

Rust preventative shall be applied to the labyrinth ring seating and the fillet of the journal. Rust preventative must be applied evenly.

Approved products are:

- Valvoline Tectyl 506
- Paykel Rust Veto 342.

Heat the labyrinth ring to no greater than 125 degrees Celsius and fit to the axle. The labyrinth shall be driven fully home against the shoulder with the correct mounting tool.

Upon installation of the labyrinth ring, the journal shall be coated with the anti fretting compound.

All heating equipment shall be monitored so that the bearing temperature is not exceeded.

The inner bearing shall be applied after heating to no more than 125 degrees Celsius.

Install the ring spacer onto the journal.

The outer bearing shall be installed after heating to no more than 125 degrees Celsius.

The bearings shall be driven home with the correct mounting tool.

The clearance between the bearings and the inner ring and labyrinth ring shall be no more than 0.03 mm. If greater than 0.03 mm the bearings are to be driven home until less than 0.03mm clearance is evident.

The inner ring spacer shall not be free to rotate by hand.

7.8.4 Greasing

Grease shall be applied to fully fill the cavity between all rollers and the space out to the outer ring. The outer edge of the journal shall be smeared with grease and any excess grease from the outer bearing shall be applied to the end of the axle in a conical shape.

An automatic greasing fixture may be used. If grease is to be applied by hand the correct measure of grease shall be prepared in a separate container that corresponds to the filling of one axlebox.

Grease spillage is not to be used on any bearings. Only clean implements shall be used.

The labyrinth of the axlebox is to be completely filled with grease by hand before fitting the axlebox.

After greasing, the axlebox is to be painted according to Section 9 to indicate the date of greasing.

7.8.5 Fitting of axleboxes

Axleboxes shall be applied without excessive force. It is advisable for jigs to be used to align the outer bearing to ease installation.

New lockwashers are to be used on rear seal nuts.

Unless otherwise specified, bolts are to be tightened to the values specified in Table 15.

Gas plug is to be tightened to 300 - 350 Nm (220 - 255ft/lbs).

Grease nipple is to be torqued to 20 Nm (15 ft/lbs).

Both the grease nipple and gas plug, where fitted, shall be installed into each axlebox using a threadlocking compound (Loctite 242 or similar).

Washers shall not be used under grease nipples with a tapered thread.

Bolt Size (B.S.W)	Torque (Nm)	Torque (ft/lbs)
3/8”	13 - 20	9 - 14
1/2”	37 - 54	27 - 39
5/8”	78 - 108	57 - 78
3/4”	137 - 186	100 - 135
7/8”	225 - 314	164 - 228
1”	314 - 450	228 - 329

Table 15

Each axlebox shall be fitted with a tag detailing the axle number and the bearing installation date, detailing month and year the bearings were fitted.

Grease nipples and gas plugs shall be fitted immediately after fitting the axleboxes to avoid contamination by water or debris.

Check for lateral play of the axlebox as detailed in Section 10.

Check for the rotating condition of the axlebox. The bearing must turn lightly without any drag or noticeable notchiness. The axlebox shall be rumble tested according to section 11.

8 Package unit bearings

8.1 Components

The package unit bearing is made up of the components shown in Figure 27.

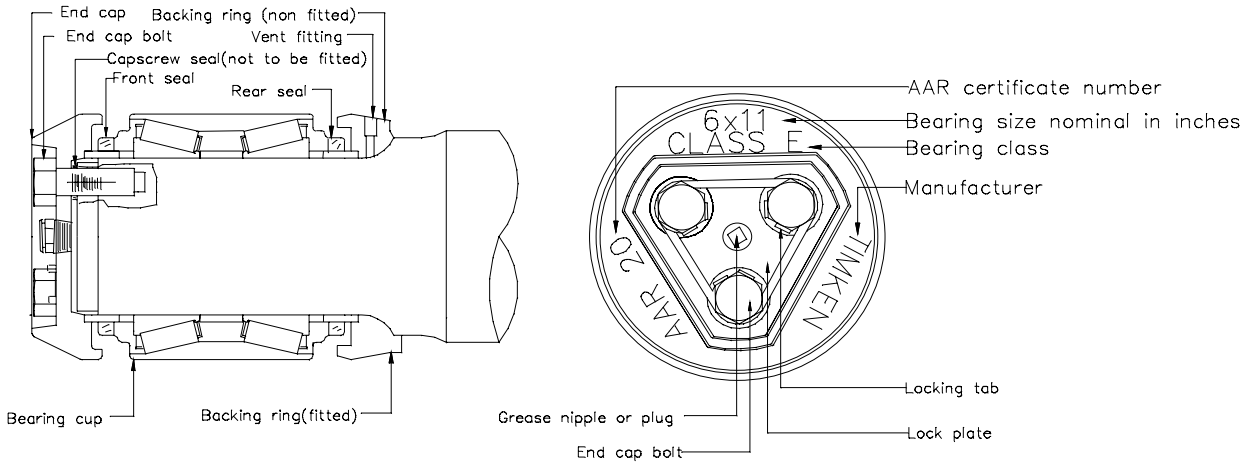

Figure 27

8.1.1 Identification.

The end cap is marked as shown in Figure 27. Not all markings will be shown on each type of end cap.

The designation of each bearing is shown in Table 16 and will allow the bearing to be identified.

SRA Code	AAR Class	Nominal size
BPU	B	4 1/2 “ x 8”
CPU	C	5” x 9”
DPU	D	5 1/2” x 10
EPU	E	6” x 11”
FPU	F	6 1/2” x 12”
GPU	G	7” x 12”

Table 16

8.2 Requalification of axle bearing journals fitted with package unit bearings

8.2.1 General

This specification details the requirements for inspecting and measuring freight axle bearing journals prior to the installation of the bearings. Requirements for gauges and master gauges are also specified.

Measurement of axle bearings journals is necessary to ensure sufficient clamp of the bearing on the journal and to maintain the correct internal clearance to minimise the chance of the bearing failing in service.

This standard covers the requirements for the requalification of freight axle bearing journals to be fitted with AP package units that are listed in this specification.

These requirements shall be met prior to bearings being fitted to axles.

8.2.2 Diameter

8.2.2.1 Bearing seat areas

The journal diameter shall be measured in critical areas, as shown in Figure 28, and located with the roller bearing seat location gauge, as shown in Figure 33. These dimensions shall not vary more than 0.038 mm (0.0015”) and there shall be no abrupt changes or steps over the length of the journal

A dial or digital snap gauge shall be rotated around the journal diameter at least 180 degrees within the bearing seat locations to obtain the maximum and minimum journal diameters.

The average diameter of each bearing seat shall be within tolerances specified in Table 17.

Care shall be taken when using temperature compensating snap gauges that rotation speed does not create sufficient heat , due to friction, to effect the readings.

There shall be no abrupt changes or steps over the length of the journal, including the tapered or stepped end, except journal grooving from inboard seal wear ring is permissible when repaired as specified in Section 8.2.6.

Undersized bearing journals may be repaired according to Section 8.7.

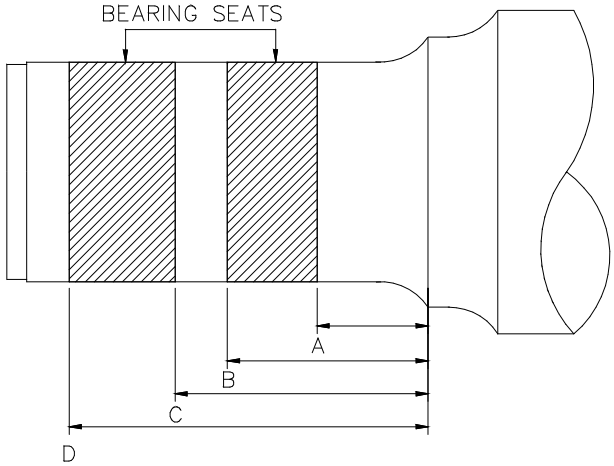

Figure 28

Axle type	Acceptance tolerances for second hand journal diameters		Dust guard diameter		Bearing seat locations Note (Dimensions in inches) Dimensions in mm				
	Max	**Min**	**Max**	**Min**	**A**	**B**	**C**	**D**	**E**
A136	(4.6920) 119.176	(4.6905) 119.139	N/A	N/A	(2 5/8) 66.6	(4 57/64) 124.2	(5 5/8) 142.8	(8 9/32) 210.3	(19/32) 15.1
A153, A144	(5.1920) 131.877	(5.1905) 131.839	N/A	N/A	(2 5/8) 66.6	(4 57/64) 124.2	(6) 152.4	(8 21/32) 219.9	(19/32) 15.1
A201	(7.0045) 177.914	(7.003) 177.876	(8.000) 203.200	(8.002) 203.250	(2 3/8) 60.3	(5 5/16) 134.9	(6 1/2) 165.1	(9 13/16) 249.2	(1/2) 12.7

Table 17

8.2.2.2 Measuring for upset journal ends

In order for a journal to be acceptable, the diameter in the area where upset can occur, as shown in Figure 29 in the shaded area, must never exceed 0.076 mm (0.003”) above maximum tolerance in the Table 17 but may be below the minimum tolerance.

A dial or digital snap gauge shall be rotated 180 degrees around where the upsets occur.

Upset ends may be corrected as per Section 8.2.7.

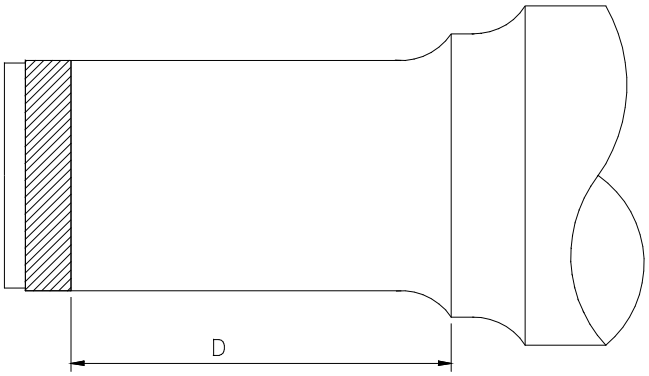

Figure 29

8.2.3 Dust guard diameter

The average diameter of each dust guard seat must be measured on the dust guard diameter as shown in Figure 30 and shall be within the tolerances shown in Table 17

A dial or digital snap gauge must be rotated around the dust guard diameter at least 180 degrees to obtain the maximum and minimum journal diameters.

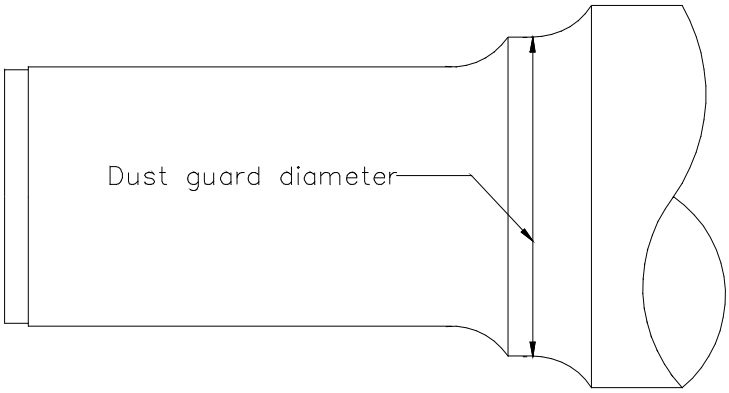

Figure 30

8.2.4 Axle tapped holes

Visually inspect tapped holes in the axle ends for thread damage, dirt and corrosion.

If any of the threads are damaged, they shall be re-tapped to give a class 2B fit and checked with a thread gauge.

8.2.5 Fillet radius

The journal fillet area of a roller bearing is critical. To insure proper fit and proper seating of the backing ring on the axle fillet, the journal fillet gauge, shown in Figure 31 and Figure 34 must be used to check the fillet radius. If a 0.125 mm (0.005”) feeler gauge can be inserted more than 10 mm (3/8”) down from the dust guard seat, at all points around the periphery, the axle fillet must be corrected.

Indications of fretting on the periphery of the journal fillet, within 10 mm (3/8”) of the dust guard seat, need not be removed as long as the fillet is in compliance with the above.

Fretting corrosion on the journal fillet may be removed with abrasive cloth, 80 grit or finer.

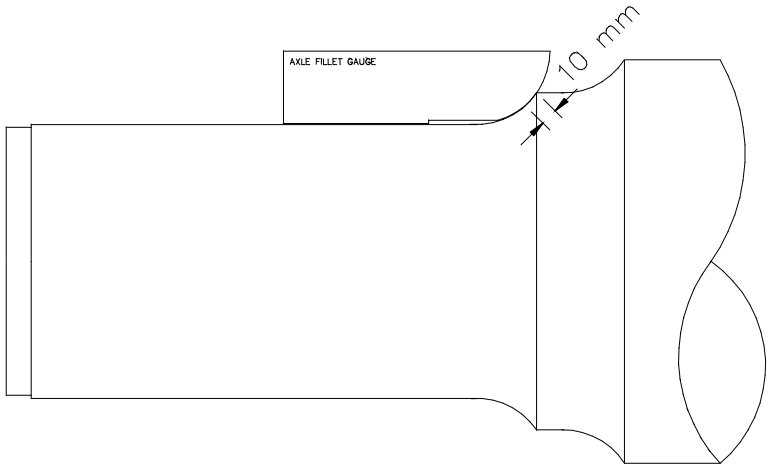

Figure 31

8.2.6 Axle journal damage

8.2.6.1 General

Any journal with depressions, surface defects, high spots or upset ends should be carefully refinished in accordance with Section 8.2.7 so as to remove them for the circumference and length of the journal providing the journal diameter is not reduced below minimum.

For detailed requirements for journal damage see Section 8.6.

8.2.6.2 Journal grooving from inboard seal wear ring

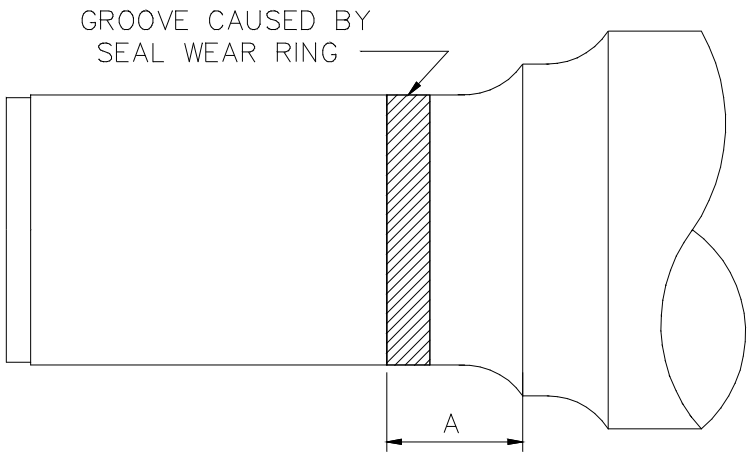

Figure 32

Depth of the seal wear ring groove must be measured using a dial indicator gauge with 0.001 mm (0.0001”) graduations. The three measurements may be averaged. Average reading not to exceed 0.05 mm (0.002”) with any one reading not to exceed 0.10 mm (0.004”). Polishing with abrasive cloth, 80 grit or finer is permitted. No abrupt changes or sharp edges are permissible.

Seal wear ring grooves not complying with the above may be repaired according to Section 8.7.

8.2.7 Rework

Files may only be used to break sharp edges of end collars, dust guard seats, ends of axles and to work down upset ends or surface defects of roller bearing axles providing the bearing seat diameters are not reduced below minimum.

Files must not be used on fillets.

Axle journal, journal fillet and the dust guard seat must be cleaned whenever using abrasive cloth for cleaning, only 80 grit or finer is permitted.

8.2.8 Gauges

8.2.8.1 Measuring gauges

A dial or digital snap gauge, with at least 0.001 mm (0.0001”) scale, must be used to measure journal diameter and must be calibrated using the master disc, at least class X tolerance grade to ANSI/ASME B.47.1.

Measurements shall be taken at the same temperature as the axle being measured unless appropriate compensation is made for the temperature difference between the master disc and the journal being measured.

8.2.8.2 Bearing seat location gauge

The bearing seat location gauge is shown in Figure 33.

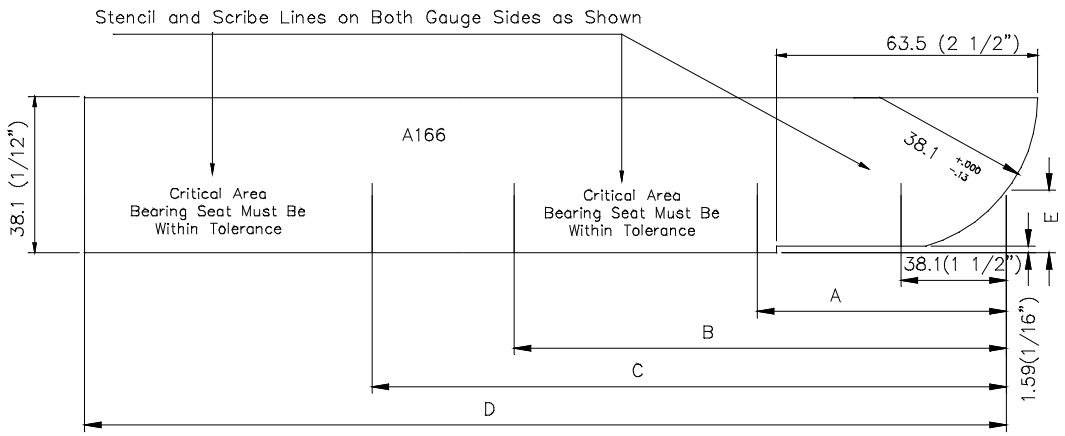

Figure 33

8.2.8.3 Axle journal fillet gauge

The journal fillet gauge is shown in Figure 34.

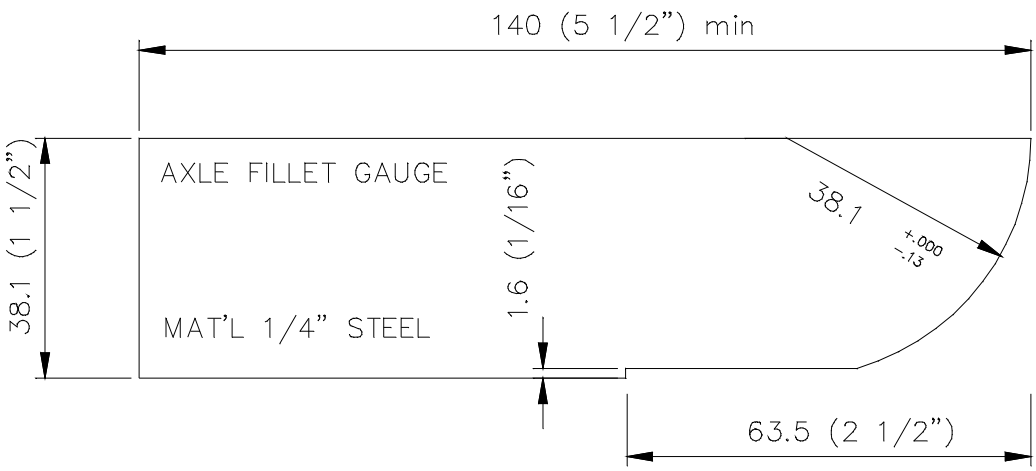

Figure 34

8.3 Package unit bearing overhaul

8.3.1 General

Railway roller bearing reconditioning is the disassembly, cleaning, inspection and repair if necessary, and reassembly of the roller bearing. Whenever a roller bearing unit that has been in service is removed from the axle journal, it must be reconditioned before reapplication.

8.3.2 Specification

Package unit bearings shall be overhauled in accordance with the AAR manual of standards and recommended practices Section H part 2 1993 unless otherwise stated in this specification.

Roller bearings re-manufacturers must comply with the requirements of Section 13.

8.3.3 Gauges

Masters used in the calibration of gauges are to be at least Class X tolerance grade to ANSI B47.1.1988 for setting discs and ANSI B89.1.6.M 1989 for setting rings.

Dial or digital reading devices must be graduated in at least 0.001 mm or 0.0001" graduations.

It is mandatory that masters be certified at least yearly by a qualified metrology laboratory traceable to NATA and up to date records be maintained.

8.3.4 Bearing disassembly

The bearing assembly, the backing ring and seal wear rings are removed, excess grease removed and the bearing assembly is ready for disassembly.

Remove the seals from the outer ring and scrap. Care must be taken to prevent unnecessary damage to the bearing even though the seal must be scrapped.

Bearing assemblies, rollers and cups, are to be kept as units.

8.3.5 Cleaning

Follow the requirements of Section 7.2.2.

8.3.6 Inspection of inner and outer rings

8.3.6.1 Outer ring

Check seal fit counter-bores for inside diameter.

When outer ring shows wear from adaptors, check diameter using micrometer or suitable gauge.

Inspect the cup for bearing damage per Section 7.2.4.

8.3.6.2 Inner Ring

Inner rings must be inspected for bearing damage per Section 7.2.4 by any suitable method that will indicate the condition of inner race.

The inside diameters must be checked with dial bore gauge or other gauges that will enable the accurate measurement of cone bore diameter.

Cone bore or gauging must be rotated at least 180 degrees to determine maximum and minimum cone bore diameter.

Average cone bore diameter must not exceed manufacturer's specifications as detailed in the AAR manual.

Cone face wear depth shall not exceed 0.12 mm (0.005") as illustrated in Figure 35

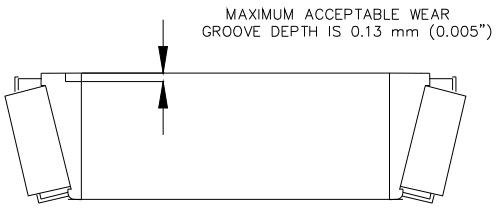

Figure 35

8.3.6.3 Rollers

The contact areas of each roller must be inspected for any damage or defects per Section 7.2.2. Separable rollers must remain in matched bearing sets.

8.3.6.4 Cage

The roller bearing cage must be checked for proper clearance, cracks, or damage. Inner rings must be placed on back face (large diameter face) when checking clearance.

8.3.7 Modifications

Bearings must be modified to the NFL configuration (bearings not requiring field lubrication) before reapplication.

8.3.8 Seal wear ring

Seal wear rings of original 1982 SKF design shall be scrapped. These rings have a sharp intersecting point between the bore and the fillet radius which causes axle scoring upon installation.

Seal wear rings must be visually inspected for nicks, cracks, or scratches on the outside surface. The seal lip in contact must be smooth and free from any defect that might damage the seal lip.

The seal lip contact path must be smooth and free from any defect that might damage the seal lip.

The seal lip contact path must not be worn beyond manufacturer's tolerances. Light rusting on the seal wear ring outer diameter from a point 3mm outside of the inner lip wear path is acceptable.

If there are circumferential grooves on the surface or any indication that the seal wear ring has turned on the axle journal, the ring should be scrapped.

8.3.9 End cap

If the end cap is equipped with a lubricant fitting, remove the fitting and replace with a non removable plug.

For twist off plugs, apply necessary torque to twist off head. Torque should be within values.

8.3.10 Marking bearings

Bearings that have been reconditioned and outer rings that have been re-manufactured must be permanently and legibly marked on the outer ring inner diameter on the straight portion in the centre between the raceways. See Figure 37.

Caution must be used to avoid nicking or damaging the raceway surfaces. The marking must include the date (month and year), the reconditioning company's initials and shop code letters.

The outer cup shall be engraved on the outside with the markings as shown in Figure 36. These markings should be placed on the outside diameter, in the centre band region, adjacent to the original manufacturer's markings.

XXX 02-02
Repairers Code Date of repair

Figure 36

The reconditioning companies letters may be obtained from the Principal.

Spacers that have end faces re-machined must have the date (month and year) and the re-machining company's initials and shop code letters marked on the outside diameter.

Previous markings must not be removed. A suitable marking tool must be used. Steel stamps and electric etching are not acceptable.

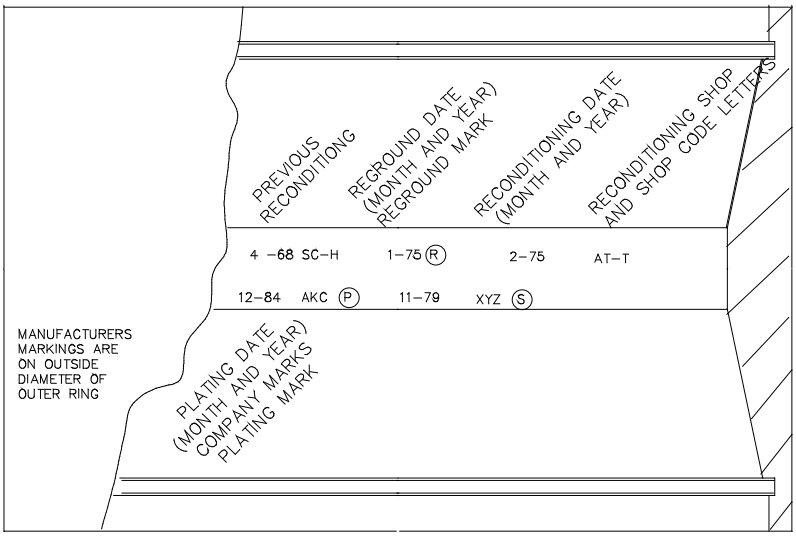

Figure 37

8.3.11 Seal wear ring

Seal wear rings must be visually inspected for nicks, cracks, or scratches on the outside surface. The seal lip in contact must be smooth and free from any defect that might damage the seal lip.

The seal lip contact path must be smooth and free from any defect that might damage the seal lip.

The seal lip contact path must not be worn beyond manufacturer's tolerances. Light rusting on the seal wear ring outer diameter from a point 3mm outside of the inner lip wear path is acceptable.

If there are circumferential grooves on the surface or any indication that the seal wear ring has turned on the axle journal, the ring should be scrapped.

8.3.12 Seals

All seals must be replaced with new seals.

8.3.13 Spacers

Spacers must be visually inspected for cracks, nicks, and burrs. Cracked spacers must be scrapped. Nicks and burrs on the end faces of all types of spacers must be stoned smooth.

8.3.14 Bearing assembly

Before reassembly, all parts must have been inspected.

All parts, including those that had protective coatings of grease or oil, must be free of dirt and grit before reassembly.

The bench lateral play of the bearing assembly must be checked to make sure that the cone spacer has the required width.

Bench lateral for tapered roller bearings must be checked with power driven lateral checking equipment (where bearings are "run in" under a light thrust load at both

extremes of lateral movement) or by a dial indicator mounted to a cam actuated, hand operated device or other suitable device for checking bearing lateral movement.

Bench lateral must not be checked when the bearing is dry.

8.3.15 Bearing lubrication

Only approved lubricants which are free from contamination by dirt or moisture may be used. Lubricant must not be heated to facilitate application.

Accurate lubrication metering systems must be used to apply the correct amount of grease, by weight, and must be verified by measuring a sample weekly

Inner ring assemblies may be prelubricated.

Alternatively grease may be applied from both sides of the assembly. When greasing in this manner, apply one half of the total amount to each side.

Lubricate the lips of the contact type seals with roller bearing grease if not prelubricated by the supplier.

Apply new seals to the outer ring.

Seals must be installed with no damage to the seal. Seal must be properly located and firmly seated. When seals are seated properly, the shoulder of the seal cases will be flush or below the bearing outer ring faces.

Apply seal wear ring and backing ring, making sure seal wear rings are applied with the bevel and lubricating holes toward inside of bearing. Apply wear rings gradually so the lips of the seal will expand and not turn under.

Inboard and outboard seal wear rings may be different. Check part numbers for correct application.

For tapered roller bearings, apply cardboard tube or similar device, to hold spacer and seal wear rings in alignment and to prevent lubrication loss, except when bearings will be mounted in the same shop.

8.3.16 Cap screws

Check threads for damage and wear. Check cap screw body for stretching or bent condition using an AAR approved gauge or other AAR approved method. Reject for burrs extending beyond the washer face on the underside of the cap screw head as these will damage the locking plate. If any defect is found in cap screw it must be rejected.

8.3.17 End cap

Inspect the end cap for surface damage, cracks, breakage, wear or distortion. A condition that would affect proper seating of the end caps and seal wear ring must be removed and corrected.

8.3.18 Rust prevention following inspection

Bearings suitable for reuse must be protected with a rust preventative according to Section 7.2.7.

8.3.19 Storage

Bearings suitable for reuse must be stored according to Section 7.2.8.

8.3.20 Information Required

Information required upon completion is detailed in Section 7.2.9.

8.4 Package unit bearing installation

8.4.1 General

This section covers the requirements for the installation of package unit bearings onto freight axles and shall be followed whenever a package unit bearing is installed onto a freight axle.

8.4.2 Bearing application

Follow the general requirements of Section 7.6.

8.4.3 Preparation and components

All bearings must be new to Section 8.5 or be reconditioned to Section 8.3.

Bearings may only be applied to axles that meet the requirements of Section 8.2.

Seating pressures are shown in Table 18.

Package Unit	Cast Backing ring Tonnes	Forged Backing Ring Tonnes
BPU	30-40	30-40
CPU	30-40	30-40
DPU	30-40	45-55
EPU	30-40	45-55
FPU	30-40	45-55
GPU	30-40	60-70

Table 18

Note: Seating pressures for NSK BPU and DPU bearings 25 to 35 tonnes.

8.4.3.1 Applying end cap

All efforts shall be made to install bearings with matched endcaps. If the end cap applied is not of the same manufacturer and approval number as the bearing to which applied, except as noted below, the locking plate shall be stamped with the bearing approval number.

End caps for classes D, E and F size bearings, with the part numbers listed in Table 19 may be interchanged between the approval number for each manufacturer only.

Manufacturer	Approval Number	DPU	EPU	FPU
Timken	1,1A	K85521 K523744	K85510 K523746	K85517 K523748
Brenco	5,5A	D1011	E1111	F1211
ND Hyatt	6,6A	4--R-3810	4-R-3811	4-R-3813
FAG	13	120987/2	120988/7	120989/7
Koyo	14	703N60	704N60	705N60
NTN	19	RT20D11 RT20D31	RT20E11 RT20E31	RT20F11 RT20F31
SKF	23	1637503-11	1637504-11	1637505-11

Table 19

Lubricant fittings should not be installed. Plugs must be installed into lubricant fitting holes.

The locking plate shall have the axle number, bearing installation date and approval number (if applicable) stamped onto it before being installed onto the endcap.

Torque values are shown in Table 20.

Package Unit	Capscrew size	Torque ft-lbs.*	Torque Nm*
BPU	3/4” - 10	115	160
CPU	7/8” - 9	145	200
DPU	7/8” -9	160	220
EPU	1” - 8	290	400
FPU	1 1/8” - 7	420	575
GPU	1 1/4” - 7	490	675

Table 20

8.5 Package unit bearing equivalents list

8.5.1 General

This specification details the approved parts for package unit bearings and the equivalent parts and AAR approval number to provide the part numbers for the purchase of new parts and the requalification of bearings for service.

Parts listed in this specification must comply with AAR specification M934 and be currently approved by the AAR. RailCorp bearing policies also determine which approved parts will be included in this specification.

Any additions to this specification will be made when the AAR manual is updated and the changes conform to RailCorp Maintenance Policy and strategy.

Package unit bearings are of the two row tapered roller design that can be supplied as complete units or as components used in the overhaul of the bearings.

The bearings are most commonly known as AAR class A, B, C, D, E, F, and G.

For items such as seals and locking tabs these components are changed every time the bearing is overhauled and other components on a needs basis.

Some components are totally interchangeable within each class of bearing and others must never be intermixed. For this reason some items (i.e roller assemblies) will require separate material listings even within the same class of bearing.

The components covered in this specification are shown in Section 8.1.

The designation for each bearing type is detailed in Section 8.1.

8.5.2 Acceptable parts

Acceptable parts are listed in the AAR manual of standards and recommended practices Section H part 2 1993 unless otherwise stated in this specification.

The AAR certificate numbers shown in Table 21 are the only approved bearings for use by RailCorp.

AAR certificate Number	Manufacturer
1A No HDL seals or sleeve	Timken
5A	Brenco
13	FAG
14	KOYO
19	NTN
22	NSK
24	KOYO
26	FAG

Table 21

8.5.3 Interchangeability

Part numbers indicated as interchangeable by the AAR in Section H part 2 Section 5 of the AAR manual may be interchanged.

8.6 Allowable bearing journal defects

This section details the limits for various types of axle bearing journal defects.

8.6.1 Complete journal

No raised metal shall be above the journal diameter as a result of any defects.

8.6.2 Inner bearing to outer bearing position

The following defects are allowed in the area between the inner bearing position (A) and the seating for the outer bearing component (D) as measured in the appropriate standard covering the requalification of bearing journals.

8.6.3 Striations

Striations are defined as longitudinal thread like lines or scratches on the bearing journal surface which have no perceivable depth.

They may be unlimited in quantity if not measurable. See Figure 38.

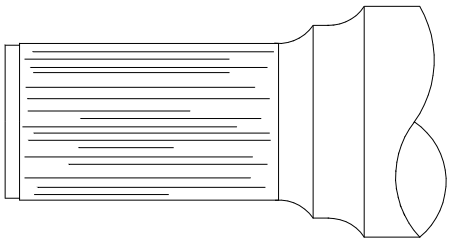

Figure 38

8.6.4 Scores

Scores are defined as a longitudinal groove with a smooth bottom.

They may be up to 5 mm wide by 1.5 mm deep with no limit on the length.

Limited to 6 per journal distributed around the journal, but not concentrated in one area. See Figure 39.

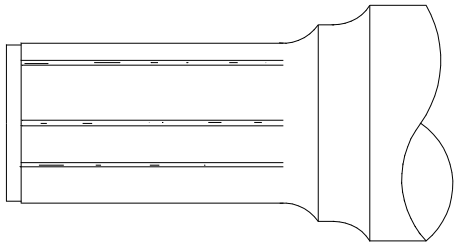

Figure 39

8.6.5 Tears

Tears are defined as longitudinal grooves that have the appearance of fish scales dragged on the surface.

They may be up to 6 mm wide by 1.5 mm deep with no limit on the length.

Limited to 5 per journal distributed around the journal, but not concentrated in one area. See Figure 40.

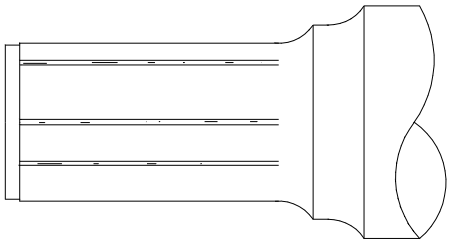

Figure 40

8.6.6 Dents / dings

A dent or ding is defined as a depression in the surface.

They are allowed if the length (measured around the journal) is less than 20 mm, depth is less than 1.5 mm and the width is less than 10 mm. See Figure 41.

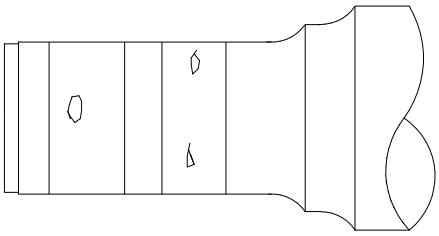

Figure 41

8.6.7 Cone scores

A cone score results from the cone spinning or creeping on the bearing journal seat, as shown in Figure 42 in the shaded area which is determined from the appropriate standard covering the requalification of bearing journals.

These circumferential depressions are an indication of an overheated bearing.

Cone scores are allowed if the depth is less than 0.03 mm below the non bearing seat area and the score does not extend for the full circumference. See Figure 42.

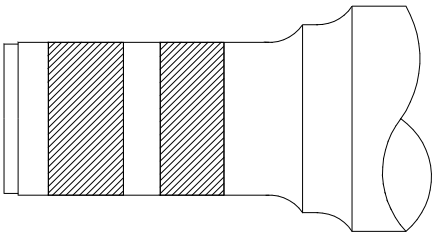

Figure 42

8.6.8 Circumferential pitting

Circumferential pitting or concentration lines are allowed provided their width is less than 6 mm and they do not extend for the full circumference.

8.6.9 Pitting

General random pitting is allowed provided that it does not cover more than 50 % of the surface and is randomly distributed. It may extend up to the fillet radius.

8.7 Reclaiming axle journals by electro chemical metal deposition (ECMD)

Roller bearing axle journals that are undersized or slightly damaged (i.e. grooved or with gradual discontinuities) may be repaired by the AAR approved electro chemical metal deposition process providing they meet the following requirements:-

The finished nickel deposits shall have a minimum Rockwell hardness of C50.

Where secondary machining or grinding is not required then all deposits shall be smooth, uniform in colour and free of pits, nodules, blisters, porosity, excessive edge build-up and other defects that would affect the functional use of the axle.

The deposit surface finish on the repaired journal must not exceed 1.6 μm (63 microinches).

The deposits shall be free of burnings and stress concentrations.

Each repaired axle shall comply with the requirements of the Adhesion Test as per Section 5.2.2 of the AAR Specification M967.

Each repaired axle must be stamped at one end of the axle with the letter "V" followed by the initials of the repairing facility and the date of repair.

Each journal shall be non-destructively tested to meet the acceptance criteria of ESR 0333 prior to remetallising.

The fillet radius of the journal shall be kept free of deposited metal.

The journal may be restored to a maximum depth of 0.25 mm (0.010") provided the deposited area does not exceed more than 10% of the total surface area of the journal length.

Journals should be free of high spots or ovality exceeding the value of 0.0005".

8.8 Requalification of package unit bearing adaptors

This section covers the requalification of package unit bearing adaptors for B, C, D, E, F & G Class package units.

Both narrow and wide adaptor units are included.

Adaptors shall be requalified when wheelsets are removed for any reason.

8.8.1 General

Adaptors shall not be repaired or reconditioned.

No welding or build up is permitted.

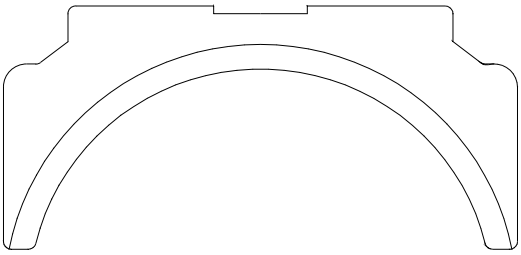

Figure 43 Narrow Adaptor

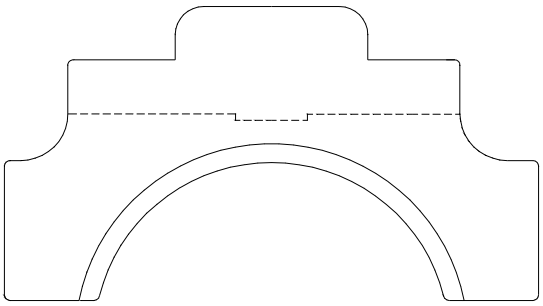

Figure 44 Wide Adaptor

8.8.2 Adaptor wear gauge

Figure 45 Adaptor wear gauge

An adaptor wear gauge may be used to requalify bearing adaptors.

This gauge is detailed in drawing 304-751 and shown in Figure 45.

Where specified, the adaptor wear gauge can be used to measure wear.

8.8.3 Inspection

8.8.3.1 General inspection

The adaptor shall be scrapped if it is cracked or broken.

The adaptor shall be scrapped if it is warped twisted or otherwise distorted. This may be checked by seating the adaptor on the appropriate bearing cup. It should seat firmly without rocking or pinching when hand pressure is applied on the top of the adaptor.

8.8.3.2 Crown measurement

The relief on the top of the adaptor shall be visually inspected to see if it is worn.

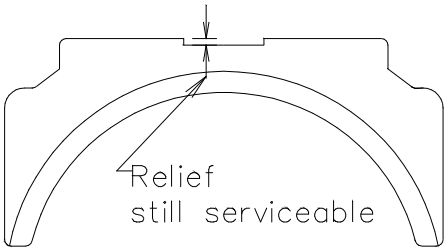

Figure 46

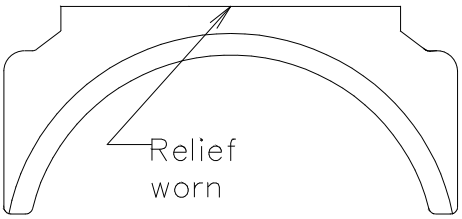

Figure 47

The adaptor shall be scrapped if the crown on the top of the adaptor is worn to such a condition that the relief is not distinguishable, at any area across the adaptor as shown in Figure 47.

8.8.3.3 Thrust shoulder

The wear on the thrust shoulder on the adaptor shall be measured or gauged.

If wear on the thrust shoulder on narrow adaptors exceeds 0.6 mm, on either side at locations where wear is a maximum, the adaptor shall be scrapped.

The Adaptor wear gauge can be used to determine if the allowable wear is exceeded. The gauge tip for the thrust shoulder should contact the adaptor if the adaptor is satisfactory for reuse. For application of the gauge see Figure 48.

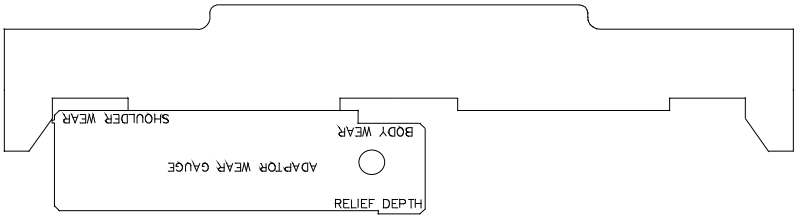

Figure 48

8.8.3.4 Adaptor machined relief

The adaptor machined relief shall be measured or gauged.

The adaptor machined relief shall have 0.8 mm or greater depth.

Adaptor machined relief shall be checked over the full arc for excessive wear.

The adaptor wear gauge can be used to determine if wear is excessive. The gauge portion for the relief depth should not contact the bottom of the machined relief if the adaptor is satisfactory for reuse. The application of the gauge is shown in Figure 49.

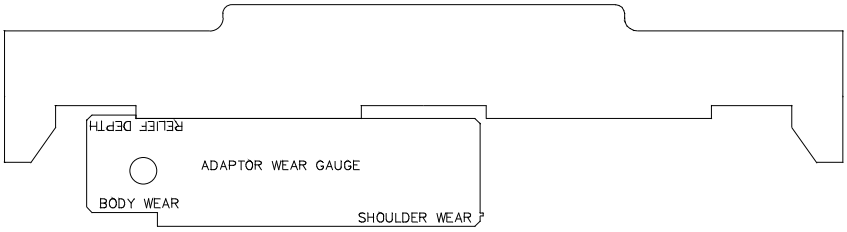

Figure 49

8.8.3.5 Adaptor body wear

The adaptor body wear shall be measured or gauged.

The maximum adaptor body wear shall be less than 3 mm on either side

The adaptor wear gauge can be used to determine if wear is excessive. The gauge portion for body wear should be used as shown and described in Figure 50.

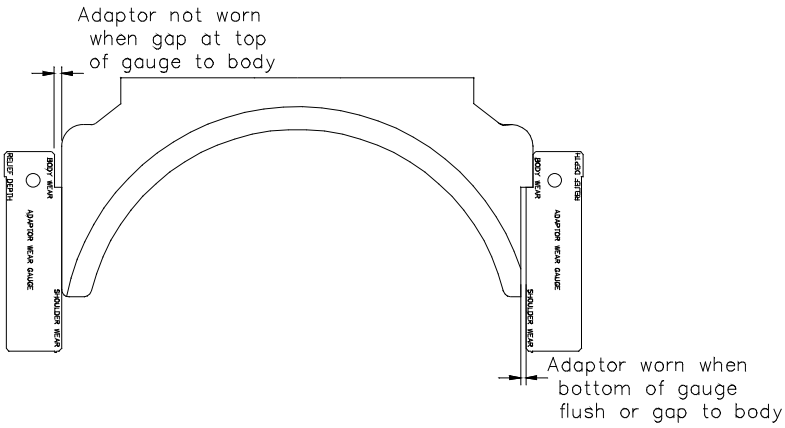

Figure 50

9 Greasing of bearings

9.1 Bearing greasing policy general

9.1.1 General

In conjunction with the Railways of Australia Intersystem Working agreement and to reduce the number of bearing failures in service, a Freight Bogie Axle Greasing Policy was formed.

This policy is in line with ARA/ROA requirements and standardises the identification of bearings due for greasing and to minimise the downtime of vehicles in service.

9.1.2 General working

Colour coding of axlebox bearings will indicate what action is required in that year, depending if the vehicle is at a repair location or in service.

The policy relies on vehicles not being marked off for due greasing but instead will utilise repair facilities and the workshops to grease the axle bearings, when due over a twelve month period, when other maintenance is being carried out on the vehicle.

Field examiners will only mark off vehicles which are one full year (ie one colour cycle) past the due date. This is when a bearing becomes overdue for greasing.

The average time between greasing for General freight bearings will be three years.

There will be no in-service greasing of package unit bearings.

There will be no grease dates on bogies.

9.1.3 Restrictions

Any colour markings on bearings for other than the purpose of greasing identification will result in the vehicles marked off in service when that colour becomes overdue as detailed in ESR 0040.

9.1.4 Application of policy

For identification of bearings due or overdue for greasing see ESR 0040.

For colour coding to be used upon greasing of bearings see Section 9.2.

Bearings will also be regreased and colour coded at wheel turning periods.

An example of the cycle for a general freight bearing is given in Table 22.

9.2 Bearing greasing colour codes

9.2.1 General

This specification details what identification (colour coding) is required on freight bearing when they are greased. This system uses colour coding so that the bearings can be identified as due for greasing, and if necessary in service as overdue for greasing.

Year	Bearing Greased	Due for greasing ESR 0040	Overdue for greasing ESR 0040
2012	White paint applied at time of greasing		
2013			
2014			
2015		Green colour becomes due for greasing and bearing will be greased if this vehicle is at a maintenance facility for any reason within this year	
2016			January – Green bearing becomes overdue for greasing and will be green carded by Examiners

Table 22 Example general freight

Note: Refer to ESR 0040, clause 2.8.3 for colour of expired bearings.

9.2.2 Colour coding at greasing

9.2.2.1 Axlebox bearings

Whenever an axle box is greased the gas plug and end face shall be painted the colour allocated for greasing. See Table 23.

The old bogie grease date (RH pedestal) if applicable, shall be removed or blacked out after greasing.

Year in which greasing is done	Apply paint colour at greasing
2012	White
2013	Blue
2014	Purple
2015	Green
2016	Yellow
2017	Pink
2018	Orange
2019	White
2020	Blue
2021	Purple
2022	Green

Table 23 Paint colours for general freight

9.2.2.2 Package unit bearings

Package unit bearings do not require colour coding. If a grease date is stencilled on the bogie this shall be blacked out.

9.2.2.3 Matching of wheelsets

Within a bogie, wheelsets shall always be matched to have the same greasing year (colour). If a new wheelset is installed into a bogie the other wheelsets must be regreased and painted accordingly.

9.2.3 Paint quality

9.2.3.1 Brushing

A full gloss brushing enamel type paint meeting specification GPC-E-24 shall be used. All major paint manufacturers can supply the following colours to this specification.

9.2.3.2 Pressure pack

The high quality pressure pack paints required for this application are limited in supply, but the colours chosen are available as indicated in Table 24.

9.2.3.3 Colour

The colours are standard from AS-2700.

Colour	AS 2700 Reference	Suitable spray pressure pack.	Manufacturer of pressure pack
Orange	X15 Orange	Volcano orange	Dulux
White	White	Rustguard gloss white Killrust gloss enamel white Appliance white	White Knight Wattyl Dulux
Blue	B41 Bluebell	Rustguard mid blue	White knight
Purple	P13 Violet	Plum purple Brush paint Ink berry	Australian export paint Dulux
Green	G12 Holly	Botanic green Killrust mid brunswick green Rustguard forest green	Dulux Wattyl White knight
Yellow	Y11 Canary	Carnival yellow Rustguard yellow	Dulux White knight
Pink	R25 Rose pink	Rustguard pink	White knight

Table 24

9.2.4 Paint application

9.2.4.1 Preparation

Surfaces to be painted shall be cleaned free of grease or dirt or heavy rust.

9.2.4.2 Application

For axleboxes, the gas plug and end face shall be coated to give full coverage.

9.3 Method of greasing bearings

9.3.1 General

This specification details the procedures required for the greasing of freight roller bearings.

It is very important that the correct quantity of grease is pumped into the axlebox. Too little grease can cause lubrication problems and eventual failure of the bearing. Too much grease can also cause the bearing to run at a higher temperature causing the grease to break down and eventually bearing failure.

Previous practice allowed grease pumps to be calibrated for a given amount dispensed in a time interval. Due to the variation in grease nipple flow rates and the variation in grease viscosity it was found that this method is not reliable for supplying the correct amount of grease in all cases and this method must not be used when greasing through grease nipples.

This greasing procedure is for freight vehicles and shall be followed for all wheelsets at the intervals specified in Section 9.1.

9.3.2 Terminology

Where the words “tighten or tightened” are used, it is not mandatory for a torque wrench to be used and the torque value is given as a guide to the expected result. The method of tightening shall have demonstrated that the required torque is achievable.

9.3.3 Calibration

9.3.3.1 Measured weight

Weight greasing systems that dispense grease on a volume (related to weight) or weight basis must be used where specified.

Systems where the pumping system is remote from the operator relying on counting the number of strokes will not be acceptable.

Hand pumps or self contained greasing pump units where the operator is no more than 3 metres from the unit shall be acceptable, provided the number of strokes can be reliably determined. The results shall be shown to be consistent.

Measured weight greasing equipment shall be calibrated at least every six months.

A system shall be in place to indicate the last date of calibration. It is recommended that a tag be affixed to the greasing gun to indicate the last date of calibration

9.3.3.2 Time basis

Greasing systems that dispense grease on a time basis, related to weight, shall only be used where specified.

For calibration on a time basis the amount of grease shall be weighed, as shown in Table 25, and the time noted for this amount to be dispensed.

If multiple points are available from the same pump, the system shall be calibrated with only one grease gun and at any time, only one grease gun shall be used, unless it can be shown that the correct amount of grease is dispensed using multiple points.

Systems calibrated on a time basis shall be calibrated at least every two months.

A system shall be in place to indicate the last date of calibration. It is recommended that a tag be affixed to the greasing gun to indicate the last date of calibration.

9.3.4 Grease nipples

If the grease nipple needs to be replaced the nipples shall be as listed in Section 7.4.

9.3.5 Grease quantity

The grease quantity to be pumped into the bearing at regreasing shall be as shown in Table 25.

Bearing arrangement	Grease quantity
Axlebox with gas plug	450 ± 25 grams
Package Unit BPU, CPU,DPU,EPU FPU	170 ± 25 grams
Package unit GPU	285 ± 25 grams

Table 25

9.3.6 Grease type

Refer to ESR 0400 for journal bearing grease

9.3.7 Greasing axleboxes

Different greasing procedures are required depending on the equipment available and whether a grease nipple is fitted.

9.3.7.1 Greasing bearings fitted with grease nipples using a calibrated grease gun.

A calibrated measured weight system shall only be used.

The exterior of the axlebox or bearing around the grease nipple shall be cleaned before commencing the greasing operation. The grease nipple orifice shall be checked to see that it is not blocked.

Pump the required amount of grease into the axlebox as listed in Table 25.

Follow the requirements of Section 9.1.

9.3.7.2 Greasing axleboxes through a nipple without a calibrated grease gun

The exterior of the axlebox around the grease nipple and gas plug shall be cleaned before commencing the greasing operation. The grease nipple orifice shall be checked to see that it is not blocked.

The gas plug shall be removed.

Grease shall be pumped through the nipple until fresh grease is seen to emerge from between the rollers of the bearing.

The gas plug shall be fitted with a new o-ring and tightened to 300-350 Nm.

Follow the requirements of Section 9.1.

9.3.7.3 Greasing axleboxes not fitted with grease nipples using a calibrated grease gun (Measured weight system)

A calibrated measured weight system shall only be used.

Grease nipples shall not be fitted to axleboxes whilst mounted on axles.

All signs of dirt and grease shall be removed from and around the gas plug.

Remove the gas plug and fit the modified gas plug greasing fixture. See drawing 307-038.

Pump in the required amount of grease as shown in Table 25

With the greasing fixture removed push the grease, as far as possible, into the axlebox and bearing. Reinstall the gas plug with a new o-ring and tighten to 300-350 Nm.

Follow the requirements of Section 9.1.

9.3.7.4 Greasing axleboxes not fitted with grease nipples with a calibrated grease pump (Time or measured weight system)

All signs of dirt and grease shall be removed from and around the gas plug.

Remove the gas plug.

Pump in the required amount of grease as shown in Table 25 through the gas pug opening.

It may be necessary to reposition the nozzle at times so the grease does not come back out the gas plughole.

Reinstall the gas plug with a new o-ring and tighten to 300-350 Nm.

Follow the requirements of Section 9.1.

9.3.7.5 Greasing axleboxes not fitted with grease nipples without a calibrated grease pump.

All signs of dirt and grease shall be removed from and around the gas plug.

Remove the gas plug.

The correct amount of grease shall be weighed out onto a clean surface e.g cardboard etc.

By hand, pack the grease into the axlebox plug orifice ensuring that the full amount weighed out is administered.

Reinstall the gas plug with a new o-ring and tighten to 300-350 Nm.

Follow the requirements in Section 9.1.

9.3.7.6 Greasing package unit bearings

A calibrated measured weight system shall only be used.

Greasing of package unit bearings shall only be carried out as indicated in Section 9.1.

Package unit bearings must be relubricated using a lubrication fixture detailed in drawing 307-214 or other method that ensures that most of the lubricant goes into the bearing. Standard end caps are not suitable due to the excessive cavity in the end cap.

Pump the required amount of grease as indicated in Table 25 into the package unit bearing.

The endcap shall be re-installed following the requirements of Section 8.4.

Follow the requirements of Section 9.1.

10 Checking bearing lateral play

This section details the bearing lateral play check that is to be used on newly installed and bearings to be requalified for further service.

This test must be performed on bearings when installed onto axles, when wheelsets are to be installed into vehicles, or as otherwise specified.

10.1 Procedure

10.1.1 Package unit bearings

Rotate the bearing by hand a few times while forcing the bearing cup laterally towards the wheel hub.

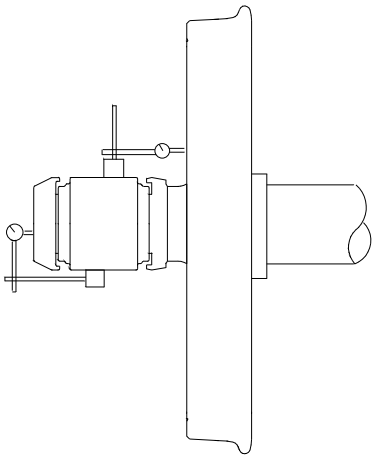

Figure 51

Dial indicator may be placed in either position

Using a dial indicator mounted on a magnetic base, place the magnetic base on the outside surface of the bearing cup or axlebox and position the indicator stem against the surface of a cap screw head, end cap, end of the axle, or the wheel hub as shown in Figure 51. Ensure that the indicator stem is at 90 degrees to the surface being measured.

Oscillate the bearing cup slightly, rotationally, while forcing the cup towards the wheel hub. Then, pull the cup away from the wheel hub while slightly oscillating the bearing cup. Determine the lateral play from the dial indicator reading.

10.1.1.1 Axlebox bearings

For axlebox bearings it will not be mandatory to use a dial indicator initially.

Oscillate the axlebox slightly, rotationally, while forcing the axlebox towards the wheel hub. Then, pull the axlebox away from the wheel hub while slightly oscillating the axlebox.

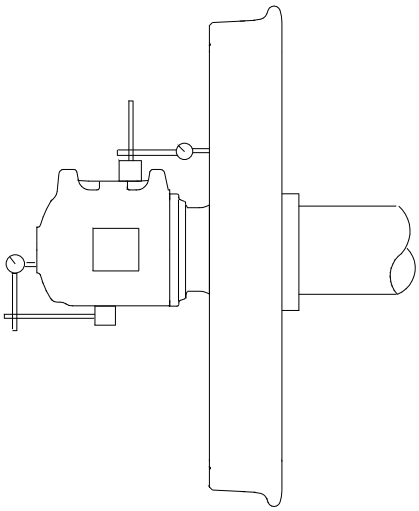

Figure 52

Dial indicator may be placed in either position

If there appears to be excessive axlebox movement or the axlebox is to be removed for excessive play then it will be required to measure the axlebox play with a dial indicator as shown in Figure 52.

10.1.2 Lateral play limits

Limits for bearings are shown in Table 26.

If the lateral play is not within specification the bearing shall be removed.

In all cases if the indicated lateral play is less than 0.0254 mm (0.001") but the bearing rotates freely when rotated by hand the bearing is acceptable for use.

Bearing type	When fitting bearing	In service
Package Unit	0.0254 - 0.508 mm 0.001” - 0.020”	0.0254 - 0.762 mm 0.001” - 0.030”
Axlebox	0.0254 - 2.5 mm 0.001” - 0.105”	0.0254 - 2.5 mm 0.001” - 0.105”

Table 26

11 Checking roller bearings following a derailment

11.1 General

Bearings must be checked as detailed due to the possibility of internal defects being caused by the impact damage.

11.2 Inspection

11.2.1 Major derailments

Major Derailments are any derailments not classified as minor derailment.

The wheelsets shall be removed from the bogie and checked according to Section 5 for freight package unit bearings and ESR 0040 for freight axlebox bearings.

11.2.2 Minor derailments

A minor derailment shall be considered to be any derailment at a speed not over 20 km/h or which have not moved on the ground more than 60 metres.

Visually inspect the bearings according to Section 8 for freight package unit bearings and ESR 0040 for freight axlebox bearings with the wheelset in the vehicle.

In addition while rerailing the vehicle, and with the wheelset suspended, rotate the wheel and feel the bearings, listening for any unusual bearing or grating noise.

12 Bearing rumble rest

12.1 General

This specification details the requirement for the rumble testing of all rolling stock bearings, both package unit and axlebox type. This test must be performed on bearings when installed onto axles, when wheelsets are to be installed into vehicles, or as otherwise specified.

12.2 Rumble test

Using the palms of both hands (see Figure 53 as guidance) rotate the bearing two full revolutions whilst thrusting the bearing towards the inner raceways and then two full turns whilst pulling the bearing against the outer raceways.

The above procedure must be performed again with the wheel rotated 120 degrees and then a third time with the wheel rotated another 120 degrees in the same direction. This is necessary to allow the total diameter of the inner raceway to be checked for defects.

Any result which is suspected of indicating a defect can be re-examined in more detail by alternately rotating the bearing in the vicinity of the suspect defect.

If any vibration, rumbling, roughness, notchiness or catches are noticed, the bearing is faulty and must be replaced. noise can be misleading. A clicking noise can result from the normal shifting of rollers in their cages and is not necessarily a defect. likewise, shifting of the rollers can also be felt, particularly when the direction of cup rotation is changed, and is not necessarily a defect.

Feel	Grading	
Smooth free running	5	OK
Gritty/sandy	4	Remove
Devere gritty	3	Remove
Notchy feel	2	Remove
Severe notchy	1	Remove
Seizure	0	Scrap

Table 27 Rumble test grading

If required the rumble test results can be graded according to Table 27.

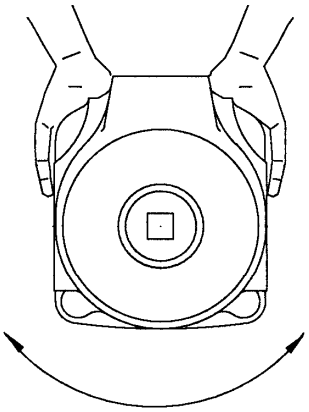

Figure 1. Rumble test on axlebox bearing. Front view.

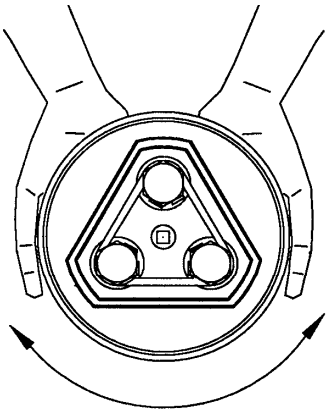

Figure 2 Rumble test on package unit bearing. Front view.

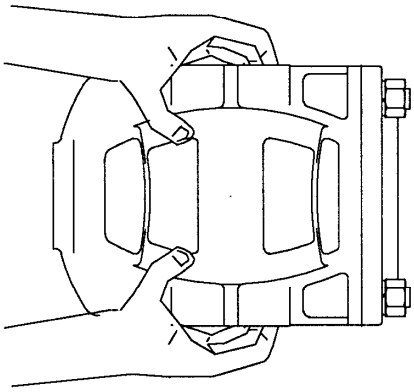

Figure 3 Rumble test on axlebox bearing. Top view.

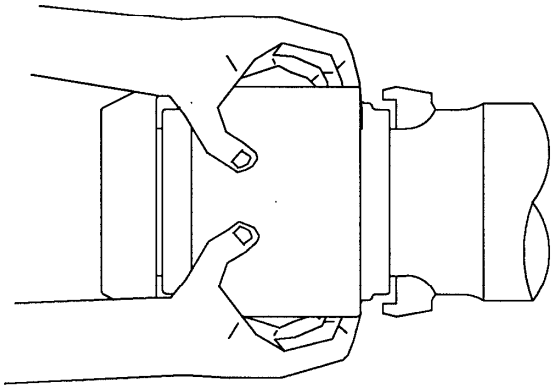

Figure 4 Rumble test on package unit bearing. Top view.

Figure 53

13 Bearing reconditioning facilities

This section details the minimum requirements for bearing re-conditioning facilities. These requirements are necessary due to the precise measurements required when reconditioning bearings and the critical applications in which requalified bearings are normally used.

All shops re-manufacturing bearings or components must meet the requirements of this section.

Roller bearing maintenance should be confined to a specific area.

The work space shall be clean, well lit, and free from congestion.

Benches, tools, cleaning tanks, and other facilities shall be used exclusively for the maintenance of roller bearings.

13.1 Quality assurance and records

This section shall only apply if the work is not covered by contractual documents.

The repairer shall have a substantial quality system to ISO 9001:2000 in place.

The repairer shall have a documented plan for controlling the quality of the re-manufactured bearings.

Records containing relevant information pertaining to the overhaul of bearings shall be kept for a period of five years and be available upon request, unless otherwise specified.

A list of bearings with serial numbers being returned to service must accompany the delivery docket.

All bearings and components shall remain the property of RailCorp throughout the re-manufacturing process.

Bearings that have been rejected for any reason must be identified as scrap, and held for a minimum period of one week to allow for audit inspections.

13.2 Handling and transport

Bearings removed from assemblies shall be stored and transported, with grease intact, in a dry environment until washing.

13.3 Gauges

Any gauges specified in the source standard must be kept in good order and calibration.

Due to the difficulty in obtaining absolute repeatability of measurements and assessing the degree of importance of a given defect on satisfactory bearing operation, an additional tolerance is specified for use in audit inspections. Tolerances to be used when the work of bearing reconditioning shops is audited by inspectors or by customer representatives are listed in Table 28.

Outer ring diameter	0.005 mm (0002”) over specified limit
Inner ring Bore Max	0.0025 mm (0.0001”) over specified limit
Fitted backing ring back face flange ID	0.005 mm (0.0002”) over specified limit
Bearing assembly bench lateral	0.0025 mm over 0.0025 mm under limit (0.001” over 0.001”) under specified limit
Grease weight	50 grams (2 ounces)

Table 28