SECTION 22

CONCRETE DETAILING

22 CONCRETE DETAILING

22.1 GENERAL

Concrete detail drawings should show the physical dimensions and levels of a concrete structure and should include any construction sequences specified by the designer. It is important that sufficient information is shown to enable formwork to be built and erected and concrete quantities to be easily calculated.

Formed holes, cast-in metal work, construction joints and any necessary layers of mass concrete shall be shown.

The location of formed holes and cast-in metal work shall be sufficiently dimensioned to enable their correct positioning inside the formwork.

Cast-in items (where applicable) shall be cross referenced to the particular sheet where respective details are shown.

The detailing of standard chamfers and fillets i.e. 20 x 20 mm, should not be shown on small scale views or sections. However, standard chamfers and fillets shall be detailed to their correct size on any view or section where the scale is 1:10 or larger (i.e. 1:10, 1:5, 1:2 etc.).

Non standard fillets i.e. greater than 20 x 20 mm, shall be shown in all instances and shall be either called up or dimensioned.

Unless otherwise specified by the design engineer, the top surface of all abutment sill beams and headstocks shall be detailed to have a downward slope of approximately 2% from the front face to the curtain wall and a minimum 50mm diameter drainage pipe shall be provided through the side wall or wing wall at the low side of the abutment. The drainage pipe shall extend a minimum of 75mm from the outer face to permit the drainage of water from the abutment.

'General Notes' applicable to concrete detail sheets are shown on RTA Standard Bridge Drawing No RTAB029 and those notes shall be used as the basis for all 'concrete' notes with any other required notes being added thereto.

Figures 22.1 to 22.6 inclusive show some typical examples of concrete detailing.

22.2 DIMENSIONING

Dimensioning of concrete items shall be in accordance with Section 7 of this Manual.

Dimensioning of concrete elements (whose details appear on a separate sheet) shall not be given.
e.g. the dimensions for the positioning of piles relative to pilecap/pier extremities shall not be shown on the pilecap/pier drawing.

22.3 PLAN VIEWS

Plan views, used to show the location of such elements as footings, columns, headstocks etc. may also be used to show reference markings, co-ordinates and chainages.

Plan views shall be drawn as a horizontal view taken immediately above the element under consideration.

Hidden details such as piles, columns and footings shall be shown as broken lines where appropriate in accordance with Section 7 of this Manual.

22.4 ELEVATIONS

Elevations shall be drawn as a view seen from a vertical plane immediately in front of the element under consideration and shall be projected from that elements 'PLAN' view.

Hidden details, such as abutment wing walls and associated fillets shall be shown as broken lines in accordance with Section 7 of this Manual.

22.5 SECTIONS

Sections shall be drawn as a view from a cutting plane located through an element previously drawn as an Elevation or Plan.

Generally, only the details at the cutting plane of the section should be shown, however, details beyond the cutting plane may be included provided that the included details are not confusing to the main details being shown.

Sections, where possible, shall be drawn adjacent to the plan or elevation to which they relate. Where section details cannot be shown on the sheet of origin, they shall be cross referenced in accordance with Appendix A of
AS 1100 Part 301.

Linework shall be in accordance with Section 7 of this Manual.

If a series of cutting planes are used to define section details, any change in direction of the cutting plane shall be shown by 0.7mm thick lines.

22.6 CONSTRUCTION JOINTS

Construction joints are not permitted in salt or brackish water in the range 0.6 m below low water level to 0.6 m above high water level.

Construction joints are not permitted in prestressed concrete items except where directed by the designer. Such construction joints, where required, shall be detailed on the drawings.

Construction joints, where critical for design purposes e.g. continuous deck slabs, voided slabs and continuity connections, shall be adequately located by dimensions on the drawings.

Where it may be possible to cast the whole of an element in one continuous operation but the quantity of concrete involved and the height of the element is large, possible construction joints may be shown and marked 'OPTIONAL'.

Construction joints may also be required in tall members(i.e. pier columns) to avoid height related access and concrete compaction problems.

The aesthetic aspect of construction joints in highly visible members should also be considered.

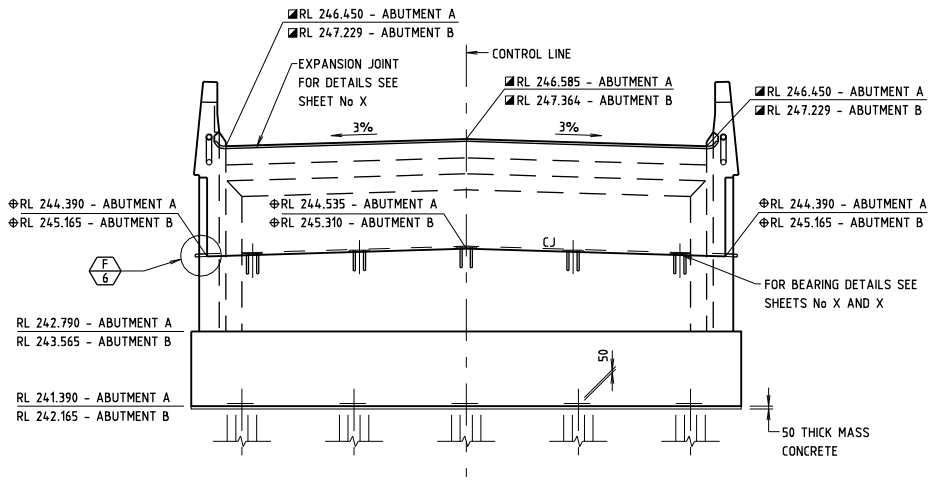

ELEVATION

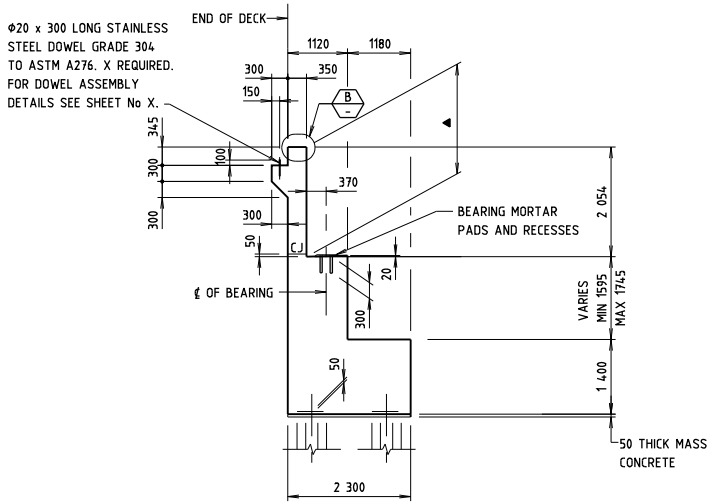

SECTION 1

GENERAL NOTES

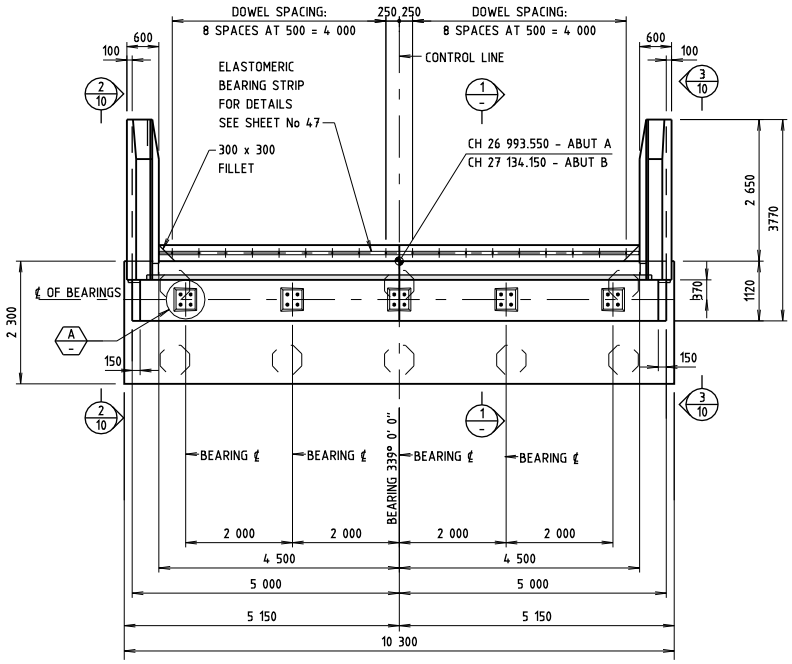

PLAN

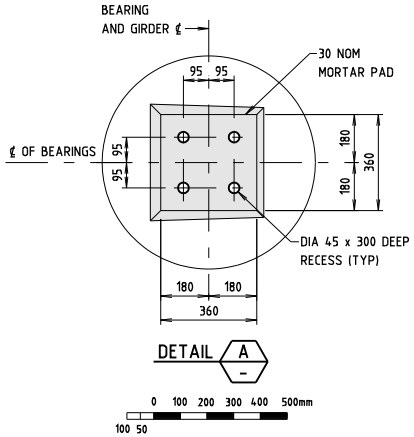

DETAIL A

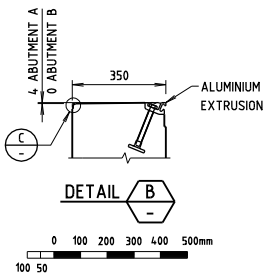

DETAIL B

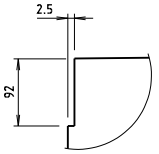

DETAIL C

NOT TO SCALE

GENERAL NOTES

SCALE 0 1000 2000 3000mm / 1000 500 OR AS SHOWN.

CONCRETE EXPOSURE CLASSIFICATION: B1.
MINIMUM 28 DAY COMPRESSIVE STRENGTH OF ALL CONCRETE SHALL BE 40MPa.
EDGES SHALL BE CHAMFERED 20x20 AND RE-ENTRANT ANGLES FILLETED 20x20 UNLESS SPECIFIED OTHERWISE.
NCF DENOTES NO CHAMFER OR FILLET.
◪ DENOTES REDUCED LEVELS AT BACK FACE OF CURTAIN WALL.
⊕ DENOTES REDUCED LEVELS AT FRONT FACE OF CURTAIN WALL.
▲ DENOTES PORTION OF CURTAIN WALLS AND WING WALLS ABOVE CJ SHALL NOT BE CONSTRUCTED UNTIL DECK SLAB CONCRETE IN ADJACENT SPAN IS PLACED. DIMENSIONS AND LEVELS SHALL BE ADJUSTED TO SUIT ACTUAL DECK LEVEL. FOR DETAILS OF EXPANSION JOINT AND COVER PLATE RECESSES, SEE SHEETS No XX AND XX.

FIGURE 22.1

ISSUE	DATE	REVISION	PREP	CHECK	AUTH

ROADS AND TRAFFIC AUTHORITY OF NSW

MAIN ROAD No 78 — SHIRE OF GUNDAGAI

BRIDGE OVER MAIN ROAD No 21

AT 4km EAST OF COOLAC

ABUTMENTS CONCRETE - SHEET A

RTA

PREPARED BY
BRIDGE ENGINEERING
110 GEORGE STREET
PARRAMATTA NSW 2150
PHONE (02) 8837-0802
FACSIMILE (02) 8837-0055

CLIENT
SOUTH WEST REGIONAL OFFICE
1 SIMMONS STREET WAGGA WAGGA
PO BOX 484 WAGGA WAGGA NSW 2650
PHONE (02) 6938-1111
FACSIMILE (02) 6938-1183

PREPARED	CHECKED	REGISTRATION No OF PLANS
DESIGN		0078 246 BC 2468
DRAWING		RTA BRIDGE NUMBER 2479
		ISSUE STATUS: FOR CONSTRUCTION
MANAGER, BRIDGE DESIGN PROJECTS		SHEET No 4 — ISSUE A

CAD No kp2f221.dgn

THIS DRAWING IS CONFIDENTIAL AND SHALL ONLY BE USED FOR THE PURPOSE OF THE NOMINATED PROJECT.

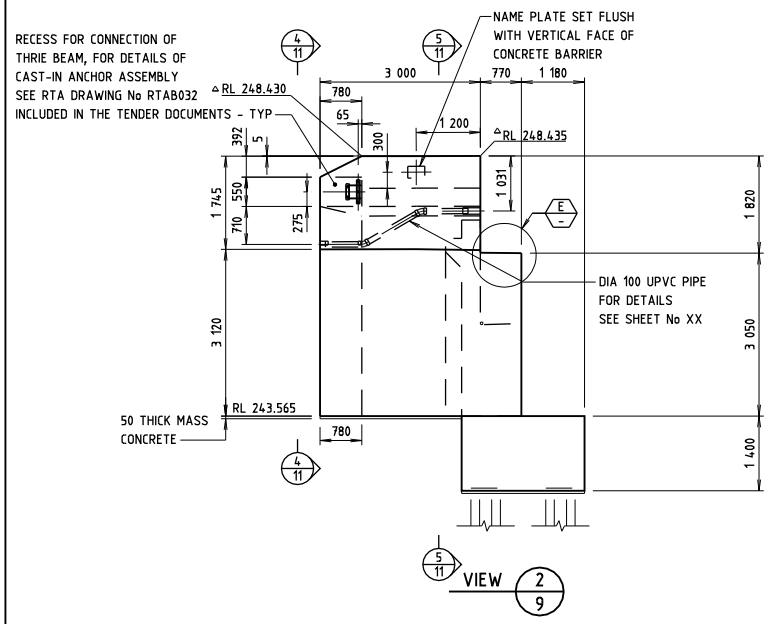

ABUTMENT B

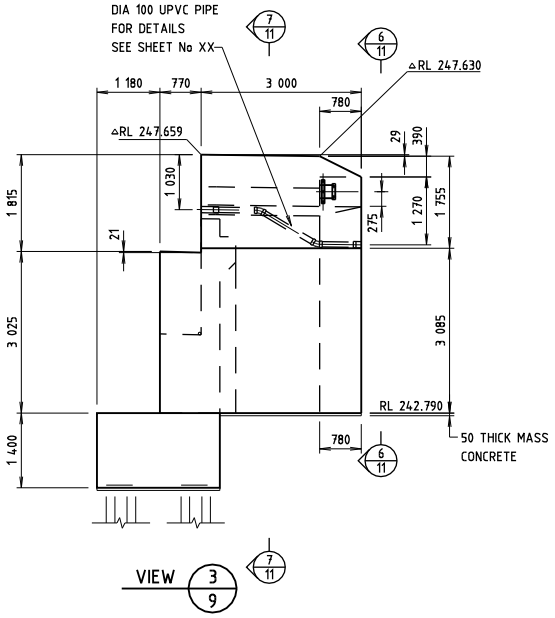

ABUTMENT A

UNISTRUT CONCRETE INSERTS FOR DRAINAGE PIPE ARE NOT SHOWN, FOR DETAILS SEE SHEETS No XX AND XX.

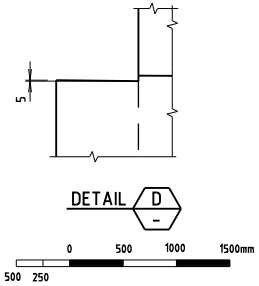

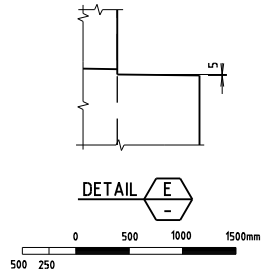

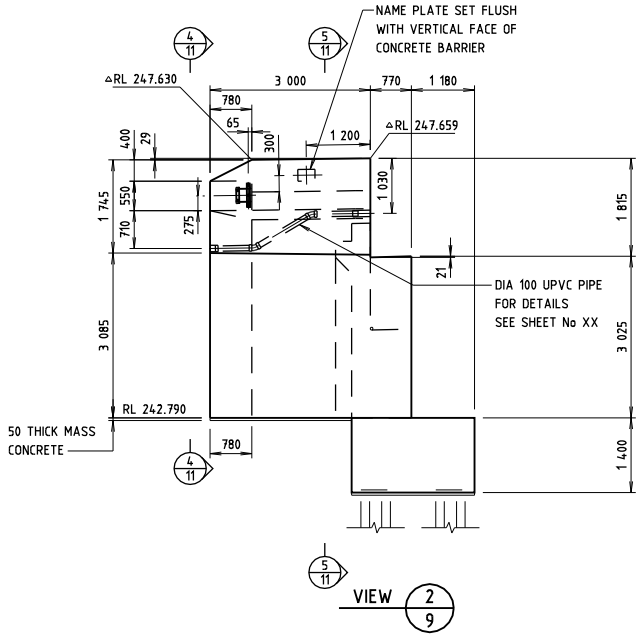

ABUTMENT A

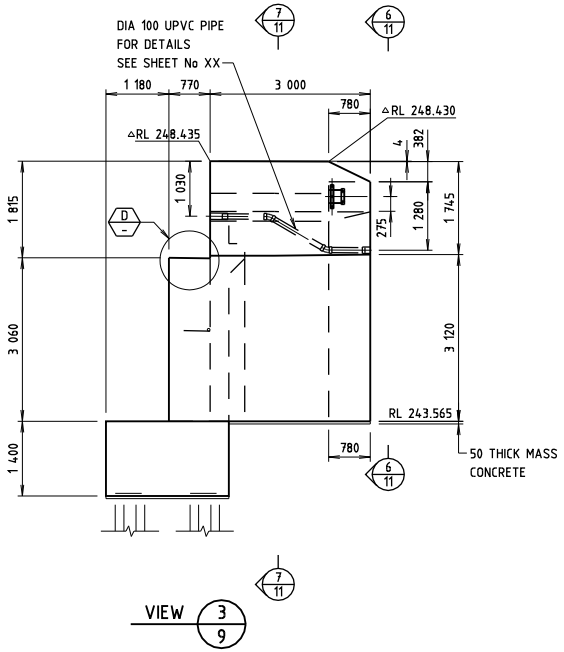

ABUTMENT B

GENERAL NOTES

SCALE 0 1000 2000 3000mm / 1000 500 OR AS SHOWN.

△ DENOTES REDUCED LEVELS AT TOP FRONT EDGE OF WINGWALL.
FOR OTHER GENERAL NOTES RELATING TO THIS SHEET, SEE SHEET No XX.

FIGURE 22.2

ISSUE	DATE	REVISION	PREP	CHECK	AUTH

ROADS AND TRAFFIC AUTHORITY OF NSW

MAIN ROAD No 78 — SHIRE OF GUNDAGAI

BRIDGE OVER MAIN ROAD No 21

AT 4km EAST OF COOLAC

ABUTMENTS CONCRETE - SHEET B

PREPARED BY
BRIDGE ENGINEERING
110 GEORGE STREET
PARRAMATTA NSW 2150
PHONE (02) 8837-0802
FACSIMILE (02) 8837-0055

CLIENT
SOUTH WEST REGIONAL OFFICE
1 SIMMONS STREET WAGGA WAGGA
PO BOX 484 WAGGA WAGGA NSW 2650
PHONE (02) 6938-1111
FACSIMILE (02) 6938-1183

PREPARED	CHECKED	REGISTRATION No OF PLANS	
DESIGN		0078 246 BC 2468	
DRAWING		RTA BRIDGE NUMBER	2479
		ISSUE STATUS: FOR CONSTRUCTION	
MANAGER, BRIDGE DESIGN PROJECTS		SHEET No 5	ISSUE A

CAD No kp2f222.dgn

THIS DRAWING IS CONFIDENTIAL AND SHALL ONLY BE USED FOR THE PURPOSE OF THE NOMINATED PROJECT.

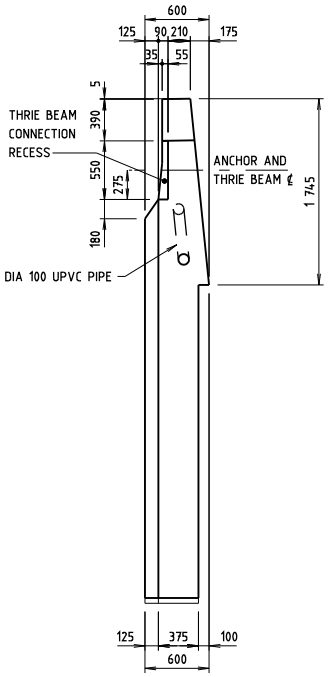

VIEW 4/5

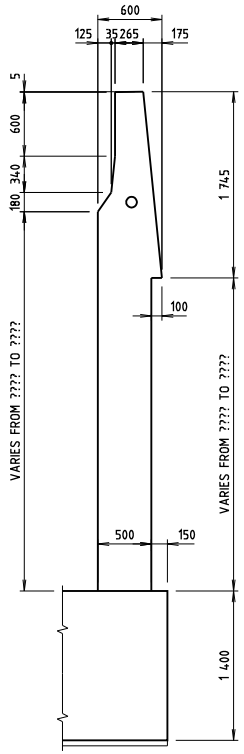

SECTION 5/5

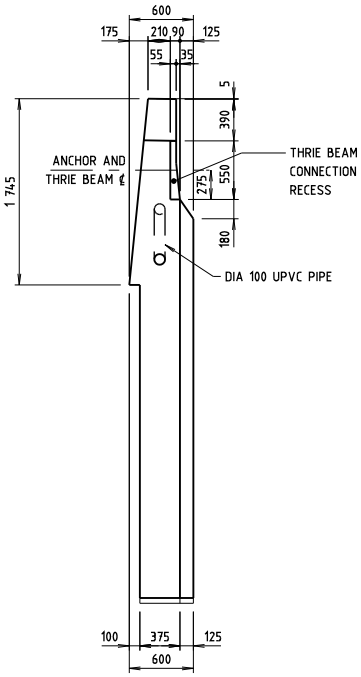

VIEW 6/5

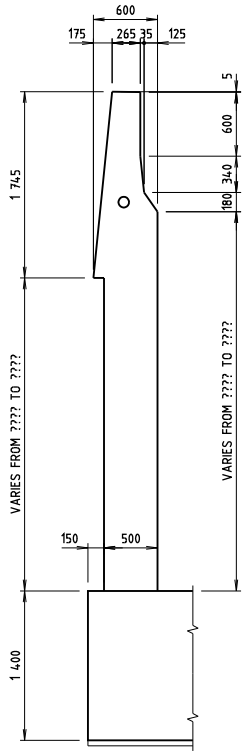

SECTION 7/5

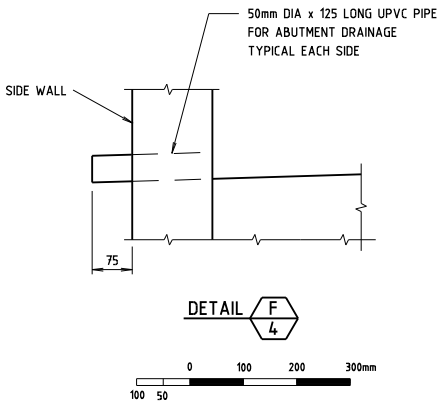

DETAIL F/4

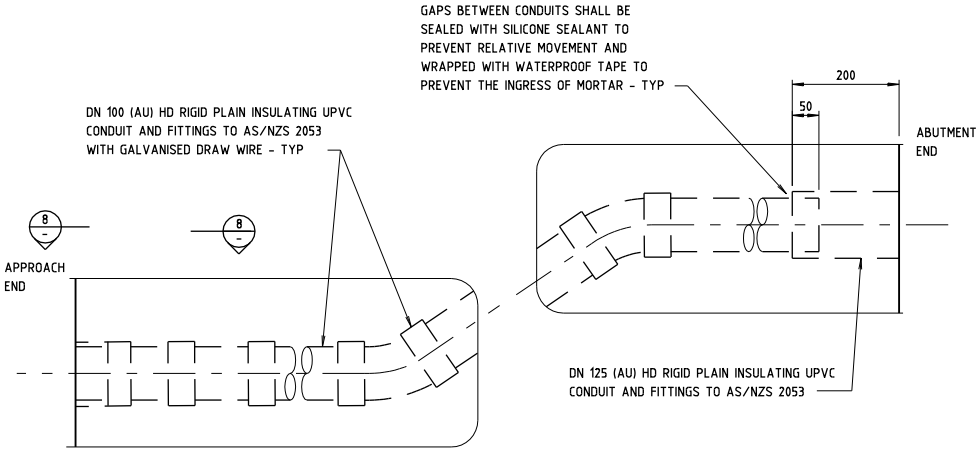

UPVC CONDUIT DETAIL

0 100 200 300mm
100 50

GENERAL NOTES

SCALE 0 500 1000 1500mm / 500 250 OR AS SHOWN.

FOR OTHER GENERAL NOTES RELATING TO THIS SHEET, SEE SHEET No X.

FIGURE 22.3

ISSUE	DATE	REVISION	PREP	CHECK	AUTH

ROADS AND TRAFFIC AUTHORITY OF NSW

MAIN ROAD No 78 — SHIRE OF GUNDAGAI

BRIDGE OVER MAIN ROAD No 21

AT 4km EAST OF COOLAC

ABUTMENT CONCRETE DETAILS - SHEET C

RTA

PREPARED BY
BRIDGE ENGINEERING
110 GEORGE STREET
PARRAMATTA NSW 2150
PHONE (02) 8837-0802
FACSIMILE (02) 8837-0055

CLIENT
SOUTH WEST REGIONAL OFFICE
1 SIMMONS STREET WAGGA WAGGA
PO BOX 484 WAGGA WAGGA NSW 2650
PHONE (02) 6938-1111
FACSIMILE (02) 6938-1183

PREPARED	CHECKED	REGISTRATION No OF PLANS	
DESIGN		0078 246 BC 2468	
DRAWING		RTA BRIDGE NUMBER	2479
		ISSUE STATUS: FOR CONSTRUCTION	
MANAGER, BRIDGE DESIGN PROJECTS		SHEET No 6	ISSUE A

CAD No kp2f223.dgn

THIS DRAWING IS CONFIDENTIAL AND SHALL ONLY BE USED FOR THE PURPOSE OF THE NOMINATED PROJECT.

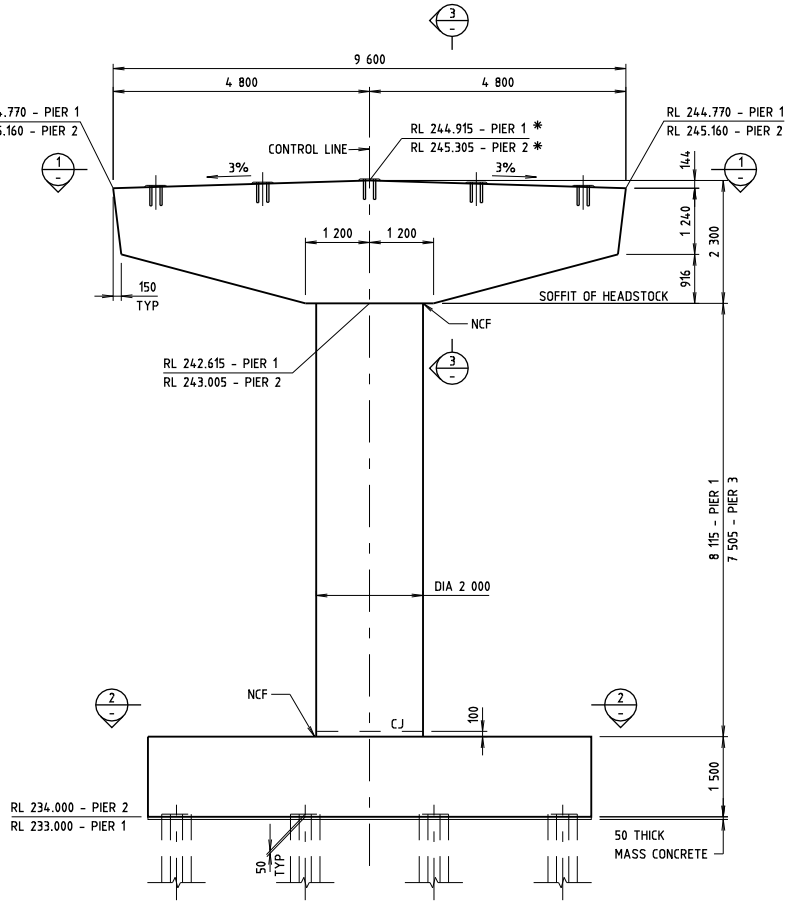

ELEVATION

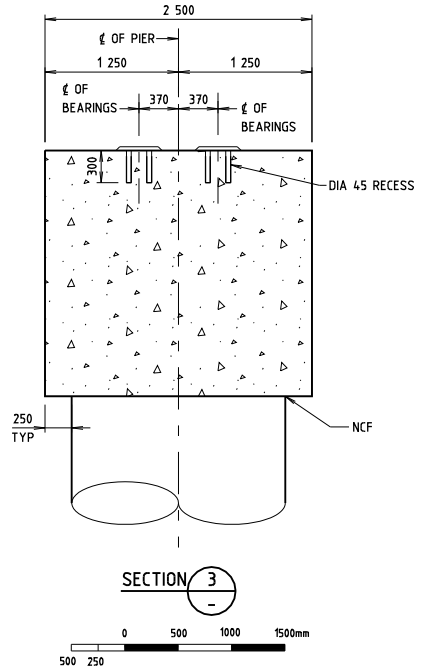

SECTION 3

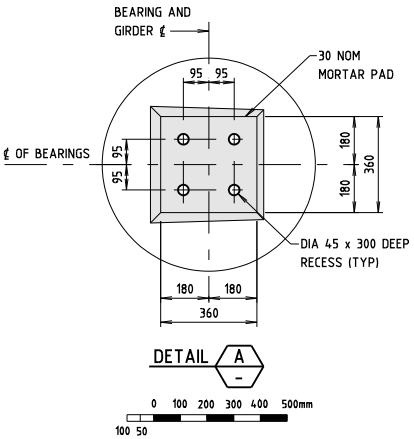

DETAIL A

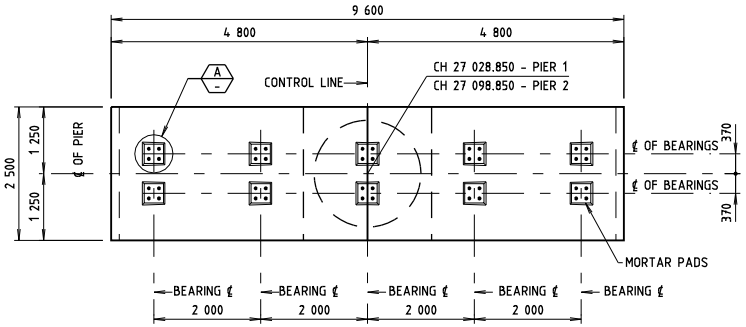

VIEW 1

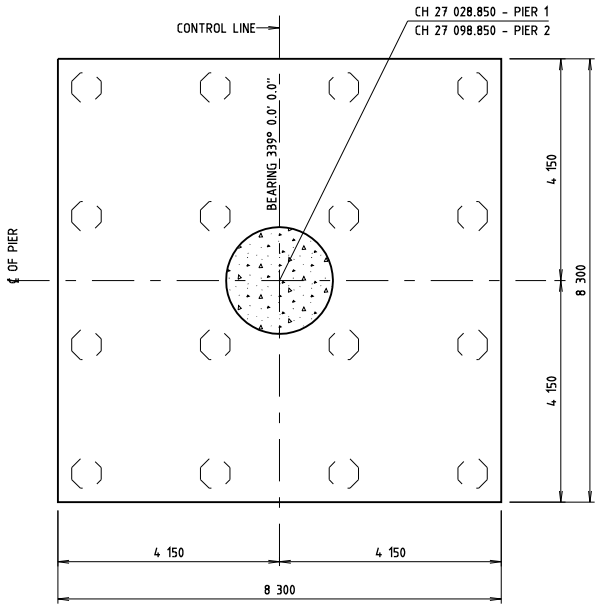

SECTION 2

GENERAL NOTES

SCALE 0 1000 2000 3000mm / 1000 500 OR AS SHOWN.

CONCRETE EXPOSURE CLASSIFICATION FOR HEADSTOCK: A.
CONCRETE EXPOSURE CLASSIFICATION ELSEWHERE: B1.
MINIMUM 28 DAY COMPRESSIVE STRENGTH OF ALL CONCRETE SHALL BE 40MPa.
EDGES SHALL BE CHAMFERED 20x20 AND RE-ENTRANT ANGLES FILLETED 20x20 UNLESS SPECIFIED OTHERWISE.
NCF DENOTES NO CHAMFER OR FILLET.
CJ DENOTES CONSTRUCTION JOINT.
* DENOTES RL ON TOP OF CONCRETE.

FIGURE 22.4

ISSUE	DATE	REVISION	PREP	CHECK	AUTH

ROADS AND TRAFFIC AUTHORITY OF NSW

MAIN ROAD No 78 — SHIRE OF GUNDAGAI

BRIDGE OVER MAIN ROAD No 21

AT 4km EAST OF COOLAC

PIERS - CONCRETE

RTA

PREPARED BY
BRIDGE ENGINEERING
110 GEORGE STREET
PARRAMATTA NSW 2150
PHONE (02) 8837-0802
FACSIMILE (02) 8837-0055

CLIENT
SOUTH WEST REGIONAL OFFICE
1 SIMMONS STREET WAGGA WAGGA
PO BOX 484 WAGGA WAGGA NSW 2650
PHONE (02) 6938-1111
FACSIMILE (02) 6938-1183

PREPARED	CHECKED	REGISTRATION No OF PLANS	
DESIGN		0078 246 BC 2468	
DRAWING		RTA BRIDGE NUMBER	2479
		ISSUE STATUS: FOR CONSTRUCTION	
MANAGER, BRIDGE DESIGN PROJECTS		SHEET No 10	ISSUE A

CAD No kp2f224.dgn

THIS DRAWING IS CONFIDENTIAL AND SHALL ONLY BE USED FOR THE PURPOSE OF THE NOMINATED PROJECT.

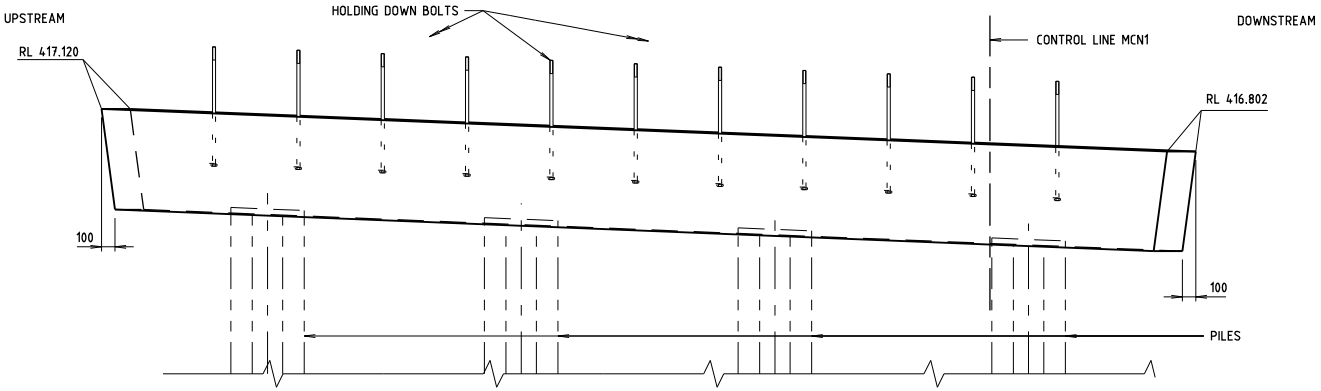

ELEVATION

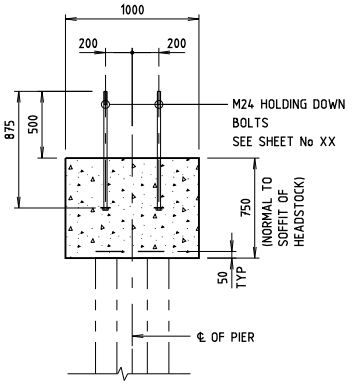

SECTION 1

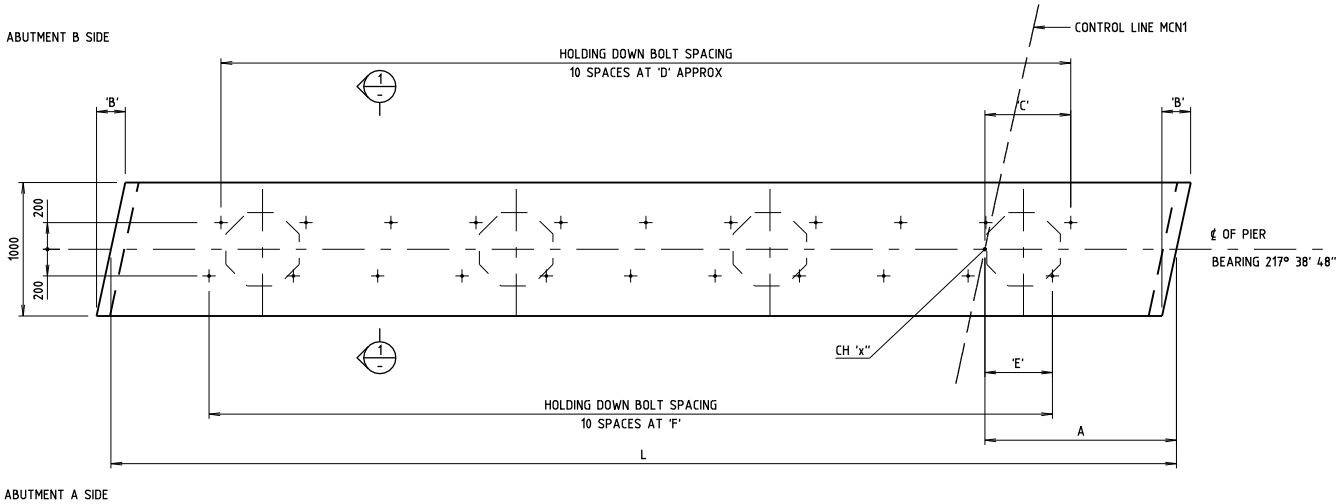

PLAN

GENERAL NOTES

SCALE 0 200 400 600 800 1000mm / 200 100 OR AS SHOWN

CONCRETE EXPOSURE CLASSIFICATION: B1
MINIMUM 28 DAY COMPRESSIVE STRENGTH OF ALL CONCRETE SHALL BE 40 MPa
EDGES SHALL BE CHAMFERED 20x20 AND RE-ENTRANT ANGLES FILLETED 20x20 UNLESS SPECIFIED OTHERWISE.
⊕ CO-ORDINATES SHOWN ARE ABBREVIATED
FOR TRUE EASTING ADD 300 000, AND FOR TRUE NORTHING ADD 6 480 000

TABLE 1

PIER No	CH 'x'	EASTING ⊕	NORTHING ⊕	L	A	B	C	D	E	F	PA'x'	PA'y'	PK'x'	PEZ'x'
1	58 128.215	986.717	1 142.952	7980	1435	215	644	636	506	632	1	4	1	1
2	58 140.415	979.027	1 152.424	8050	1445	255	659	642	498	636	2	5	2	2
3	58 152.615	971.682	1 162.165	8130	1460	295	676	649	489	642	3	6	3	3

FIGURE 22.5

ISSUE	DATE	REVISION	PREP	CHECK	AUTH

ROADS AND TRAFFIC AUTHORITY OF NSW

MAIN ROAD No 67 — SHIRE OF YASS

BRIDGE OVER WET WATER CREEK

AT 34km WEST OF YASS

PIER CONCRETE

RTA

PREPARED BY
BRIDGE ENGINEERING
110 GEORGE STREET
PARRAMATTA NSW 2150
PHONE (02) 8837-0802
FACSIMILE (02) 8837-0055

CLIENT
INSERT RELEVANT CLIENT DETAILS HERE

PREPARED — CHECKED

DESIGN ___ ___ ___ ___
DRAWING ___ ___ ___ ___

MANAGER, BRIDGE DESIGN PROJECTS

REGISTRATION No OF PLANS: 0067 258 BC 1258
RTA BRIDGE NUMBER: 10571
ISSUE STATUS: PRELIMINARY
SHEET No 7 — ISSUE 3

CAD No kp2f225.dgn

THIS DRAWING IS CONFIDENTIAL AND SHALL ONLY BE USED FOR THE PURPOSE OF THE NOMINATED PROJECT.

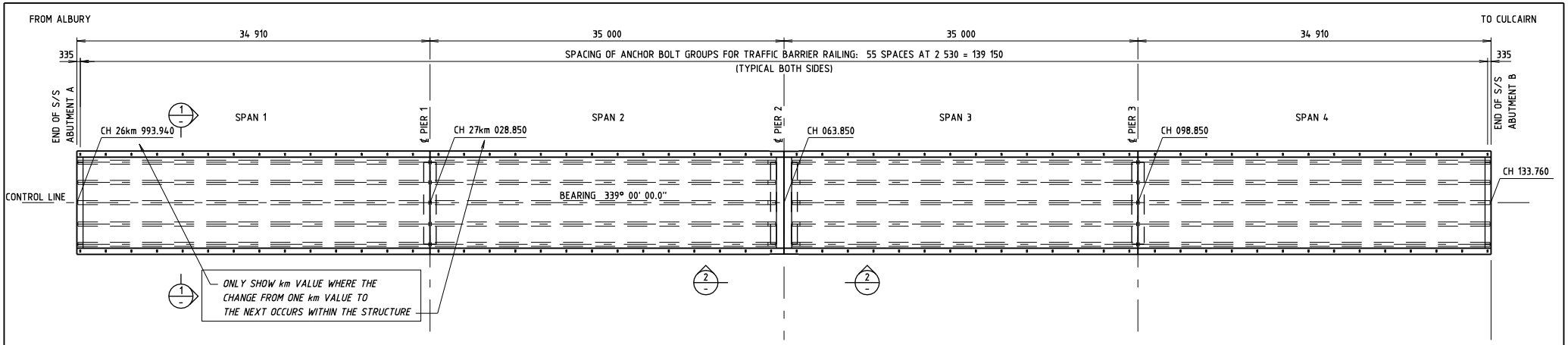

PLAN

0 2 4 6 8 10m
2 1

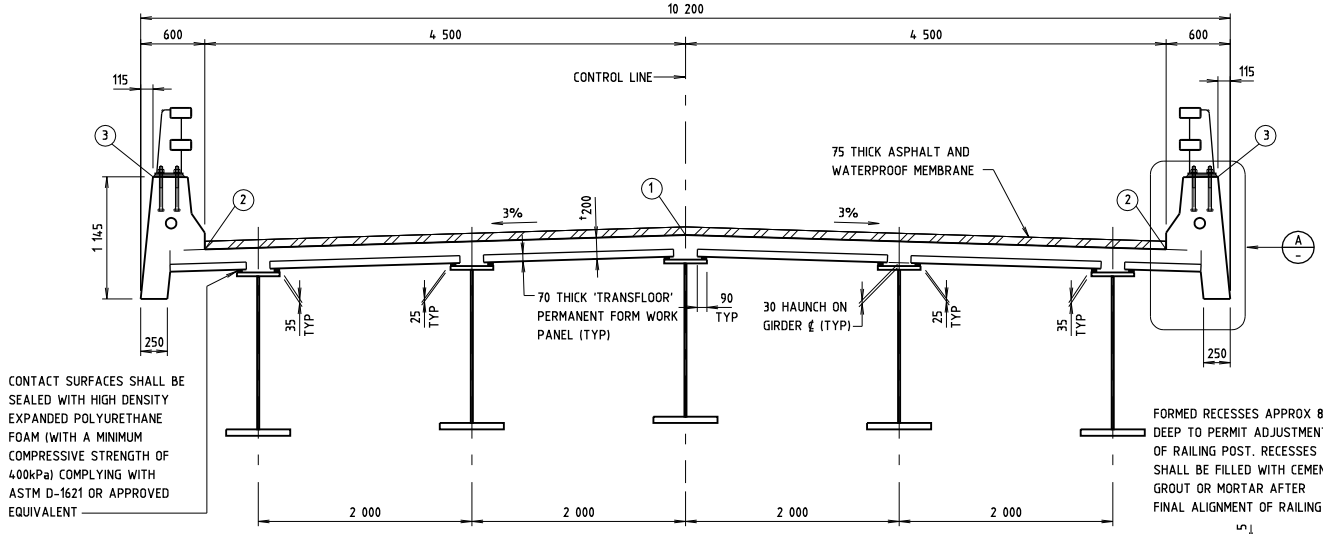

SECTION 1

0 500 1000 1500mm
500 250

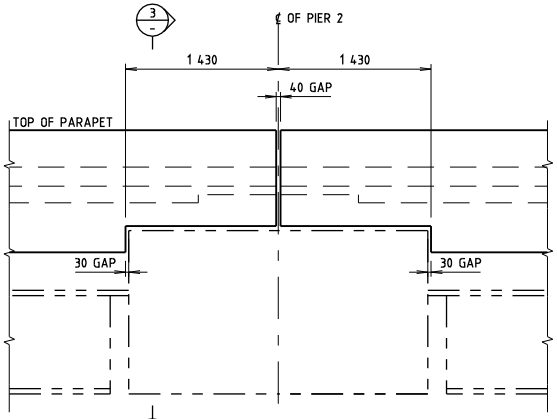

VIEW 2

0 500 1000 1500mm
500 250

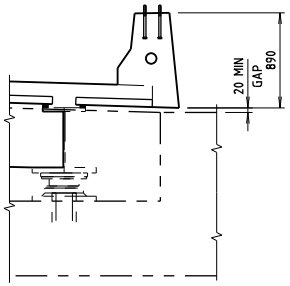

SECTION 3

0 500 1000 1500mm
500 250

GENERAL NOTES

SCALES AS SHOWN.
CONCRETE EXPOSURE CLASSIFICATION: A
MINIMUM 28 DAY COMPRESSIVE STRENGTH OF ALL CONCRETE SHALL BE 40 MPa.
EDGES SHALL BE CHAMFERED 20x20 AND RE-ENTRANT ANGLES FILLETED 20x20 UNLESS SPECIFIED OTHERWISE.
NCF DENOTES NO CHAMFER OR FILLET.
S/S DENOTES BRIDGE SUPERSTRUCTURE.
CONCRETE IN CROSS GIRDERS AT PIERS AND ABUTMENTS SHALL BE PLACED AFTER PLACEMENT OF BRACING AND PRIOR TO PLACEMENT OF DECK FORMWORK.
SEE SHEET No ?? FOR REDUCED LEVELS AT POINTS 1-3.
† DENOTES VALUE AT SUPPORT AND VARIES ELSEWHERE DUE TO VERTICAL CURVE

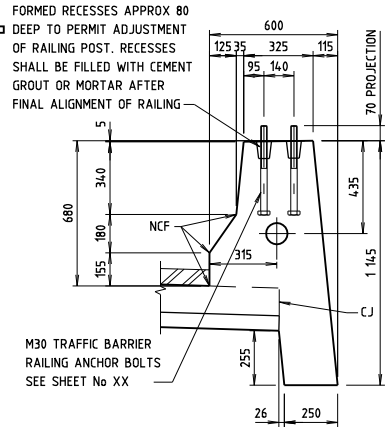

DETAIL A

0 250 500 750mm
250 125

FIGURE 22.6

ISSUE	DATE	REVISION	PREP	CHECK	AUTH

ROADS AND TRAFFIC AUTHORITY OF NSW

MAIN ROAD No 78 — CITY OF ALBURY

BRIDGE OVER MAIN SOUTHERN RAILWAY AT 27.5km NORTH OF ALBURY

DECK - SHEET A

RTA

PREPARED BY
BRIDGE ENGINEERING
110 GEORGE STREET
PARRAMATTA NSW 2150
PHONE (02) 8837-0802
FACSIMILE (02) 8837-0055

CLIENT
INSERT RELEVANT CLIENT DETAILS HERE

PREPARED	CHECKED	REGISTRATION No OF PLANS
DESIGN		0078 202 BC 2468
DRAWING		RTA BRIDGE NUMBER 2479
		ISSUE STATUS: FOR CONSTRUCTION
MANAGER, BRIDGE DESIGN PROJECTS		SHEET No 16 ISSUE A

CAD No kp27228.dgn

THIS DRAWING IS CONFIDENTIAL AND SHALL ONLY BE USED FOR THE PURPOSE OF THE NOMINATED PROJECT.