SECTION 32

BRIDGE SIZE REINFORCED CONCRETE BOX CULVERTS

32 BRIDGE SIZE REINFORCED CONCRETE BOX CULVERTS

32.1 GENERAL

In accordance with Section 2 of this Manual, a culvert is defined as a covered channel consisting of one or more adjacent enclosed cells of rectangular or other shape, for conveying a watercourse or stream below formation level.

Culverts may also be used to provide property access, an underpass for the safe movement of livestock or an underpass for the safe passage of fauna from one side of the road corridor to the other side of the road corridor.

Reinforced concrete box culverts may be cast-in-place or may be constructed from precast crown units on a cast-in-place reinforced concrete base slab. The width of the culvert shall be given as the distance between outer faces of outer crown units along the centreline of the road. The width of the culvert is the governing factor in determining if the culvert is to be classified as a bridge and therefore assigned a Bridge Number in RTA's Bridge Inventory System (BIS).

Where the width of the culvert is 6 metres or more along the centreline of the road, for the purposes of inventory, it shall be deemed to be a bridge and it shall be assigned a Bridge Number by the Regional Bridge Maintenance Planner in the Regional Office of record. Plans for the culvert shall carry a "BC" type Plan Registration Number sourced through the RTA's Micrographics Unit.

In accordance with RTA business rules, in all cases where culverts are used as an underpass for property access, the movement of livestock or the safe passage of fauna from one side of the road corridor to the other side of the road corridor, irrespective of length along the road centreline, they shall be deemed to be a bridge. Such culverts shall be allocated a Bridge Number by the Regional Bridge Maintenance Planner in the Regional Office of record and plans shall carry a "BC' type plan registration number.

Cast-in-place reinforced concrete box culverts shall be fully detailed on the design drawings.

Precast reinforced concrete crown units and link slabs shall be designed and supplied in accordance with RTA QA Specification R16 – Precast Reinforced Concrete Box Culverts.

32.2 COVER SHEETS

The Cover Sheet shall be prepared in accordance with Section 20 of this Manual. Where the culvert is constructed using precast reinforced concrete crown units and link slabs, the Cover Sheet shall carry the following note:

"Crown units and link slabs shall be supplied in accordance with AS 1597.2" with any special design traffic loading or loadings being added to the note.

In all applicable cases, a Construction Loading diagram, together with any necessary information and/or supplementary notation, shall be provided on the Cover Sheet.

Where the culvert is located at a defined watercourse, the title used on the Cover Sheet and detail sheets shall be in the format shown in Figure 32.2.1. The name of the watercourse shall be provided, along with a reference distance and direction from a known location.

Where the culvert is located where there is no defined watercourse, the title used on the Cover Sheet and details sheets shall be in the format shown on Figure 32.2.2. A reference distance and direction from a known location shall be provided.

Where the culvert is located at a property access point, a stock underpass or fauna underpass, the title used on the Cover Sheet and detail sheets shall be in the format shown in Figure 32.2.3. A reference distance and direction from a known location shall be given.

Where an existing reinforced concrete box culvert is to be extended, the title used on the Cover Sheet and detail sheets shall be in the format shown in Figure 32.2.4. The details of the existing culvert (year of construction, Bridge No and registration number of plans) shall be provided as shown in Figure 32.2.4

In all instances, the number of cells, together with the cell dimensions shall be provided as part of the title information.

32.3 GENERAL ARRANGEMENT DRAWINGS

The General Arrangement suite of drawings for a culvert shall consist of a plan, longitudinal section (along the centreline of the culvert) and a view of the culvert perpendicular to the centreline of the culvert. A Datum Block, with a Datum Reduced Level and showing chainages, design surface levels and existing surface levels, shall be provided beneath the end view.

The General Arrangement suite of drawings, where applicable, shall provide details of a typical joint between adjoining precast concrete crown units and details of any link slab connections.

The General Arrangement suite of drawings shall also contain a table which provides the assumed precast concrete crown unit dimensions used in the design.

The General Notes, in the General Arrangement suite of drawings, shall provide information with respect to the crown unit dimensions and the fill height to be used in the design of the precast concrete crown units as well as the number of standard crown units and end crown units required.

Where precast reinforced concrete link slabs are used in the culvert design, the span and width dimensions of the link slabs, together with the fill height to be used in the design of the link slabs and the number of each type of link slab required, shall be provided in the General Notes.

Where the size of the culvert requires that it be considered to be a bridge and therefore allocated a Bridge No (see Clause 32.1), the suite of General Arrangement drawings shall clearly show the location of the name plates that must be set flush with the finished concrete surface of the left hand side wing walls as viewed from each end of the culvert. The dimensions for the location of the name plates shall be given on the Wing Wall detail sheet.

A typical suite of General Arrangement drawings is shown in Figures 32.3.1 and 32.3.2.

32.4 CAST-IN-PLACE BASE SLABS

Cast-in-place reinforced concrete base slabs shall be detailed to suit the assumed dimensions of precast reinforced concrete crown units provided on the General Arrangement drawing.

Cast-in-place reinforced concrete base slabs shall be located by providing the co-ordinates of the inlet and outlet ends of the culvert on the centreline of the culvert. Reduced levels shall be provided at the inlet and outlet end of the base slab on the centreline of the culvert.

The location and depth of recesses provided for the seating of precast reinforced concrete crown units shall be clearly shown in the cross section and reinforcement shall be detailed to suit.

The General Notes on the cast-in-place base slab drawing shall contain the following note: "All concrete dimensions shall be checked and adjusted if necessary to suit the actual precast crown units used."

Cut-off walls shall be provided at both ends of the base slab.

The reinforcement in the cast-in-place base slab shall be detailed in accordance with Section 23 of this Manual.

A typical cast-in-place reinforced concrete base slab is shown in Figure 32.4.1.

In some instances, cast-in-place base slabs may be required to have a nominal depth depression to provide an adequate means for aquatic life to pass through the culvert during periods of low flow. Such culverts are termed "fish friendly". The method of detailing the concrete base slabs for "fish friendly" culverts is shown in Figure 32.4.2 and the method of detailing the reinforcement in such slabs is shown in Figure 32.4.3.

Where culverts are designed to be used as a livestock underpass, the top surface of the base slab must be grooved diagonally in both directions to provide improved traction for livestock. Figure 32.4.4 shows an appropriate method of detailing a grooved surface on a base slab for a reinforced concrete box culvert that is used as a livestock underpass. It should be noted that increased cover to reinforcement is required in base slabs in livestock underpasses due to the acidic nature of livestock excrement that may be deposited during livestock movement.

The use of contraction joints in culvert base slabs is optional unless specified by the designer or the client. A typical contraction joint detail is shown on Figure 32.4.1.

Wing wall starter bars must be cast into base slabs. The number, location and shape of such bars shall be clearly detailed on the base slab drawing.

32.5 CAST-IN-PLACE APRON SLABS

Cast-in-place reinforced concrete apron slabs shall be provided at each end of all culverts used for the purpose of either a stock or fauna underpass. Where the base slab supporting the culvert has been detailed with a grooved surface to provide improved traction, the grooved surface shall be continued on the apron slab as well. Figure 32.4.5 shows a typical example of a grooved surface on Apron Slabs.

32.6 PRECAST REINFORCED CROWN UNITS

Generally, the dimensions of reinforced concrete crown units and end units shall not be shown where the units are shown on the drawings.. The assumed concrete dimensions for crown units and end units shall be given in table format on the General Arrangement drawing as shown in Figure 32.3.1.

32.7 CAST-IN-PLACE HEADWALLS

Cast-in-place reinforced concrete headwalls shall be detailed to suit the dimensions of precast reinforced concrete crown units and end units specified in the table provided on the General Arrangement drawing.

Precast end crown units shall be shown on the drawing, with the protruding reinforcement clearly detailed to enable the correct placement of reinforcement in the headwall. Where the reinforcement in the headwall is designed to be lapped with reinforcement protruding from the precast reinforced concrete end crown units, this shall be clearly stated on the drawing.

A typical Cast-in-Place Headwall drawing, for use on a culvert with a precast reinforced concrete link slab, is shown in Figure 32.7.1.

A typical Cast-in-Place Headwall drawing, for use on a culvert without a precast reinforced concrete link slab, is shown in Figure 32.7.2.

32.8 CAST-IN-PLACE WING WALLS

Cast-in-place reinforced concrete wing walls shall be detailed to suit the height of the fill above the culvert, the slope of the road embankment in the approaches to the culvert and the height of the cast-in-place reinforced concrete headwall.

Particular attention must be paid to the setting out information for wing walls that is shown on the wing wall drawing. The setting out point for wing walls is the intersection point of the outside face of the wingwall and the outside face of the outer crown unit at the front face of the base slab.

The location of name plates for bridge size culverts shall be clearly shown on the drawing or drawings.

Typical details for cast-in-place reinforced concrete wing walls are shown in Figure 32.8.1.

32.9 INLET AND OUTLET PROTECTION

Where culverts are to be located at a defined watercourse or in areas known to be subject to flooding, consideration must given to protecting the area immediately adjacent to both the inlet and outlet end of the culvert against scour. The type and level of scour protection required at individual culvert sites shall be as directed by the client or a suitably qualified Hydraulic Engineer.

32.10 CULVERT EXTENSIONS

Where an existing reinforced concrete box culvert is to be extended, the size of the crown units used shall be such that the existing waterway area is not reduced.

The information to be shown in the General Arrangement suite of drawings shall be in accordance with Figures 32.10.1and 32.10.2 with particular reference being made to the sealing of the interface between the existing culvert and new culvert extension.

The base slab that is constructed to seat the additional crown units shall be connected to the exisiting base slab using stainless steel dowels at 300mm centres as shown in Figure 32.10.1. The downturn at the end of the existing concrete base slab in contact with the new concrete downturn shall be roughened. A sealant, complying with RTA Specification RTAB312, shall be used at the interface between existing work and new work as shown in relevant details on Figure 32.10.1.

The drawing prepared to provide details of the cast-in-place base slab reinforcement drawing shall be in accordance with typical details as shown in Figure 32.4.1.

The drawing prepared to provide details of cast-in-place wing walls shall be in accordance with typical details as shown in Figure 32.8.1.

The drawing prepared to provide details of the cast-in-place headwall shall be in accordance with typical details shown in Figures 32.7.1 a or 32.7.2 as appropriate.

32.11 BAR SHAPES DIAGRAM

A suitable Bar Shapes Diagram shall be included in each set of drawings prepared for new culvert construction or culvert extensions.

Transport Roads & Traffic Authority

ROADS AND TRAFFIC AUTHORITY OF NEW SOUTH WALES

HIGHWAY No 2
HUME HIGHWAY

SHIRE OF GREATER HUME

CULVERT AT HOLBROOK CREEK

AT 115.354 km SOUTH OF GUNDAGAI

3 CELL - 2 400 x 1 200 PCBC

NEW PRECAST CONCRETE BOX CULVERT - 2010
BRIDGE No B10714

DESIGN FILE No 09M1473

CROWN UNITS AND LINK SLABS SHALL BE SUPPLIED IN ACCORDANCE WITH AS1597.2 EXCEPT THAT THE TRAFFIC LOADING SHALL BE SM1600 AND HLP 400 IN ACCORDANCE WITH AS 5100 BRIDGE DESIGN

SCHEDULE OF DRAWINGS

1 COVER SHEET
2 GENERAL ARRANGEMENT - SHEET A
3 GENERAL ARRANGEMENT - SHEET B
4 CAST-IN-PLACE BASE SLAB
5 CAST-IN-PLACE HEADWALLS
6 CAST-IN-PLACE WING WALLS
7 BAR SHAPES DIAGRAM

CONSTRUCTION LOADING

637G CONSTRUCTION SCRAPER LOAD WITH MINIMUM 1m FILL

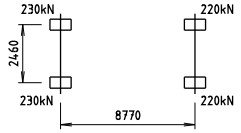

637G WHEEL TRACTOR SCRAPER MAXIMUM WHEEL LOADS
WHEEL LOADS DO NOT INCLUDE DYNAMIC LOAD ALLOWANCE.
A DYNAMIC LOAD ALLOWANCE OF 10% HAS BEEN CONSIDERED IN DESIGN. PROVISION OF CONSTRUCTION LOADING IS RESTRICTED TO ONE VEHICLE AT ANY TIME WITH NO CO-EXISTING LOADING.
VEHICLE SPEED IS RESTRICTED TO 10km /H ON THE CULVERT.
A MINIMUM CLEARANCE OF 1.5m FROM PIT RISER, HEADWALL AND WING WALLS SHALL BE MAINTAINED IN ALL DIRECTIONS FOR 637G SCRAPER LOAD.

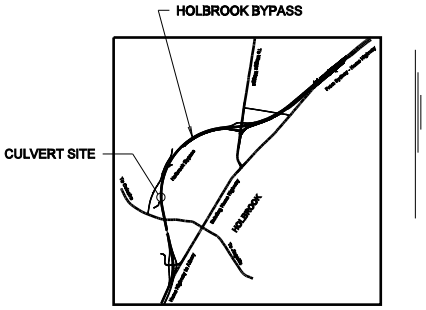

LOCALITY PLAN

THE CULVERT SITE IS APPROXIMATELY 493 km BY ROAD FROM SYDNEY

Transport Roads & Traffic Authority
PREPARED BY
BRIDGE ENGINEERING BRANCH
110 GEORGE STREET
PARRAMATTA NSW 2150
PHONE (02) 8837-0802
FACSIMILE (02) 8837-0866

DESIGNED AND PRODUCED UNDER A QUALITY SYSTEM CERTIFIED AS COMPLYING WITH ISO/AS 9001 BY AN ACCREDITED CERTIFICATION BODY

FIGURE 32.2.1

REGISTRATION No OF PLANS	0002 186 BC 0267				
ISSUE STATUS: FOR CONSTRUCTION					
SHEET No	1	No OF SHEETS	7	ISSUE	A

CAD No KP2F3221.dgn

ROADS AND TRAFFIC AUTHORITY OF NEW SOUTH WALES

HIGHWAY No 2
HUME HIGHWAY

SHIRE OF GREATER HUME

CULVERT AT 115.283 km SOUTH OF GUNDAGAI

3 CELL - 2 400 x 1 200 PCBC

NEW PRECAST CONCRETE BOX CULVERT - 2010
BRIDGE No B10713

DESIGN FILE No 09M1473

CROWN UNITS AND LINK SLABS SHALL BE SUPPLIED IN ACCORDANCE WITH AS1597.2 EXCEPT THAT THE TRAFFIC LOADING SHALL BE SM1600 AND HLP 400 IN ACCORDANCE WITH AS 5100 BRIDGE DESIGN

SCHEDULE OF DRAWINGS

1 COVER SHEET
2 GENERAL ARRANGEMENT - SHEET A
3 GENERAL ARRANGEMENT - SHEET B
4 CAST-IN-PLACE BASE SLAB
5 CAST-IN-PLACE HEADWALLS
6 CAST-IN-PLACE WING WALLS
7 BAR SHAPES DIAGRAM

CONSTRUCTION LOADING

637G CONSTRUCTION SCRAPER LOAD WITH MINIMUM 1m FILL

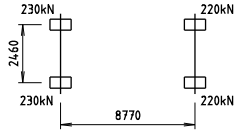

637G WHEEL TRACTOR SCRAPER MAXIMUM WHEEL LOADS
WHEEL LOADS DO NOT INCLUDE DYNAMIC LOAD ALLOWANCE.
A DYNAMIC LOAD ALLOWANCE OF 10% HAS BEEN CONSIDERED IN DESIGN. PROVISION OF CONSTRUCTION LOADING IS RESTRICTED TO ONE VEHICLE AT ANY TIME WITH NO CO-EXISTING LOADING.
VEHICLE SPEED IS RESTRICTED TO 10km /H ON THE CULVERT.
A MINIMUM CLEARANCE OF 1.5m FROM PIT RISER, HEADWALL AND WING WALLS SHALL BE MAINTAINED IN ALL DIRECTIONS FOR 637G SCRAPER LOAD.

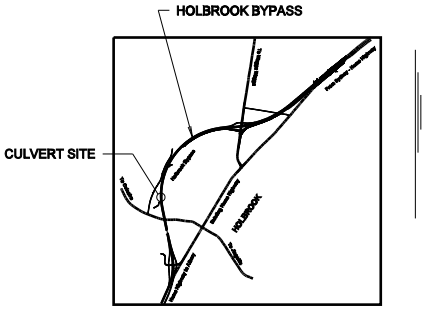

LOCALITY PLAN

THE CULVERT SITE IS APPROXIMATELY
493 km BY ROAD FROM SYDNEY

Transport Roads & Traffic Authority
PREPARED BY
BRIDGE ENGINEERING BRANCH
110 GEORGE STREET
PARRAMATTA NSW 2150
PHONE (02) 8837-0802
FACSIMILE (02) 8837-0066

DESIGNED AND PRODUCED UNDER A QUALITY SYSTEM CERTIFIED AS COMPLYING WITH ISO/AS 9001 BY AN ACCREDITED CERTIFICATION BODY

FIGURE 32.2.2

REGISTRATION No OF PLANS	0002 186 BC 0266				
ISSUE STATUS: FOR CONSTRUCTION					
SHEET No	1	No OF SHEETS	7	ISSUE	A

CAD No KP2F3222.dgn

ROADS AND TRAFFIC AUTHORITY OF NSW

HIGHWAY No 2
HUME HIGHWAY

SHIRE OF GREATER HUME

STOCK UNDERPASS

AT 116.72 km SOUTH OF GUNDAGAI
3 000 x 3 000 PCBC

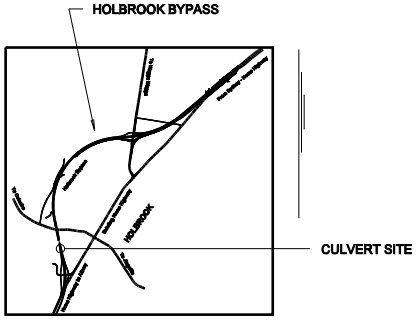

LOCALITY PLAN

THE CULVERT SITE IS APPROXIMATELY
494 km BY ROAD FROM SYDNEY

SCHEDULE OF DRAWINGS

1 COVER SHEET
2 GENERAL ARRANGEMENT - SHEET A
3 GENERAL ARRANGEMENT - SHEET B
4 CAST-IN-PLACE BASE SLAB
5 CAST-IN-PLACE HEADWALLS AND APRON SLABS
6 CAST-IN-PLACE WING WALLS
7 BAR SHAPES DIAGRAM

PREPARED BY
BRIDGE ENGINEERING
110 GEORGE STREET
PARRAMATTA NSW 2150
PHONE (02) 8837-0802
FACSIMILE (02) 8837-0805

DESIGNED AND PRODUCED UNDER A QUALITY SYSTEM CERTIFIED AS COMPLYING WITH ISO/AS 9001 BY AN ACCREDITED CERTIFICATION BODY

FIGURE 32.2.3

NEW PRECAST CONCRETE BOX CULVERT - 2010
BRIDGE No B10790
DESIGN FILE No 09M1473

CROWN UNITS SHALL BE SUPPLIED IN ACCORDANCE WITH AS1597.2 EXCEPT THAT THE TRAFFIC LOADING SHALL BE SM1600 AND HLP 400 IN ACCORDANCE WITH AS 5100 BRIDGE DESIGN

CONSTRUCTION LOADING

637G CONSTRUCTION SCRAPER LOAD WITH MINIMUM 1m FILL

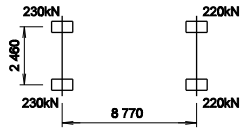

637G WHEEL TRACTOR SCRAPER MAXIMUM WHEEL LOADS
WHEEL LOADS DO NOT INCLUDE DYNAMIC LOAD ALLOWANCE.
A DYNAMIC LOAD ALLOWANCE OF 10% HAS BEEN CONSIDERED IN DESIGN. PROVISION OF CONSTRUCTION LOADING IS RESTRICTED TO ONE VEHICLE AT ANY TIME WITH NO CO-EXISTING LOADING.
VEHICLE SPEED IS RESTRICTED TO 10km /H ON THE CULVERT.
A MINIMUM CLEARANCE OF 1.5m FROM PIT RISER, HEADWALL AND WING WALLS SHALL BE MAINTAINED IN ALL DIRECTIONS FOR 637G SCRAPER LOAD.

REGISTRATION No OF PLANS	0002 186 BC 0263				
ISSUE STATUS: FOR CONSTRUCTION					
SHEET No	1	No OF SHEETS	7	ISSUE	A

CAD No KP2F3223.dgn

ROADS AND TRAFFIC AUTHORITY OF NSW

HIGHWAY No 2
HUME HIGHWAY

SHIRE OF GREATER HUME

CULVERT AT UNNAMED CREEK

AT 1.4 km SOUTH OF HOLBROOK

3 CELL - 3 000 x 1 500 PCBC - EXTENSION

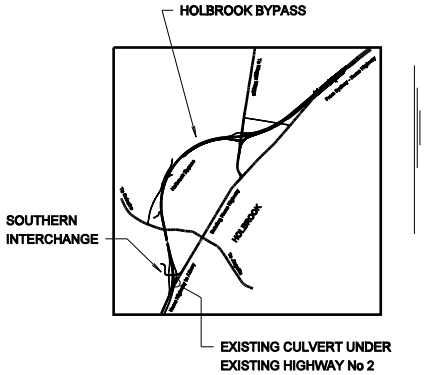

LOCALITY PLAN

THE CULVERT SITE IS APPROXIMATELY 494 km BY ROAD FROM SYDNEY

NOT TO SCALE

SCHEDULE OF DRAWINGS

1 COVER SHEET
2 GENERAL ARRANGEMENT - SHEET A
3 GENERAL ARRANGEMENT - SHEET B
4 CAST-IN-PLACE BASE SLAB - CONCRETE
5 CAST-IN-PLACE BASE SLAB - REINFORCEMENT
6 CAST-IN-PLACE HEADWALL
7 CAST-IN-PLACE WING WALLS
8 BAR SHAPES DIAGRAM

Transport Roads & Traffic Authority

PREPARED BY
BRIDGE ENGINEERING BRANCH
110 GEORGE STREET
PARRAMATTA NSW 2150
PHONE (02) 8837-0802
FACSIMILE (02) 8837-0805

DESIGNED AND PRODUCED UNDER A QUALITY SYSTEM CERTIFIED AS COMPLYING WITH ISO/AS 9001 BY AN ACCREDITED CERTIFICATION BODY

FIGURE 32.2.4

EXISTING PRECAST CONCRETE BOX CULVERT - 1973
BRIDGE No B7895
REGISTRATION No OF PLANS: 0002 199 RC 0819

CULVERT EXTENSION - 2010
DESIGN FILE No 09M1473
CROWN UNITS SHALL BE SUPPLIED IN ACCORDANCE WITH AS1597.2 EXCEPT THAT THE TRAFFIC LOADING SHALL BE SM1600 AND HLP 400 IN ACCORDANCE WITH AS 5100 BRIDGE DESIGN

CONSTRUCTION LOADING

637G CONSTRUCTION SCRAPER LOAD WITH MINIMUM 1m FILL

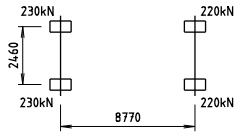

637G WHEEL TRACTOR SCRAPER MAXUIMUM WHEEL LOADS
WHEEL LOADS DO NOT INCLUDE DYNAMIC LOAD ALLOWANCE.
A DYNAMIC LOAD ALLOWANCE OF 10% HAS BEEN CONSIDERED IN DESIGN. PROVISION OF CONSTRUCTION LOADING IS RESTRICTED TO ONE VEHICLE AT ANY TIME WITH NO CO-EXISTING LOADING.
VEHICLE SPEED IS RESTRICTED TO 10km /H ON THE CULVERT.
A MINIMUM CLEARANCE OF 1.5m FROM PIT RISER, HEADWALL AND WING WALLS SHALL BE MAINTAINED IN ALL DIRECTIONS FOR 637G SCRAPER LOAD.

REGISTRATION No OF PLANS		0002 186 BC 0267			
ISSUE STATUS: FOR CONSTRUCTION					
SHEET No	1	No OF SHEETS	8	ISSUE	A

CAD No KP2F3224.dgn

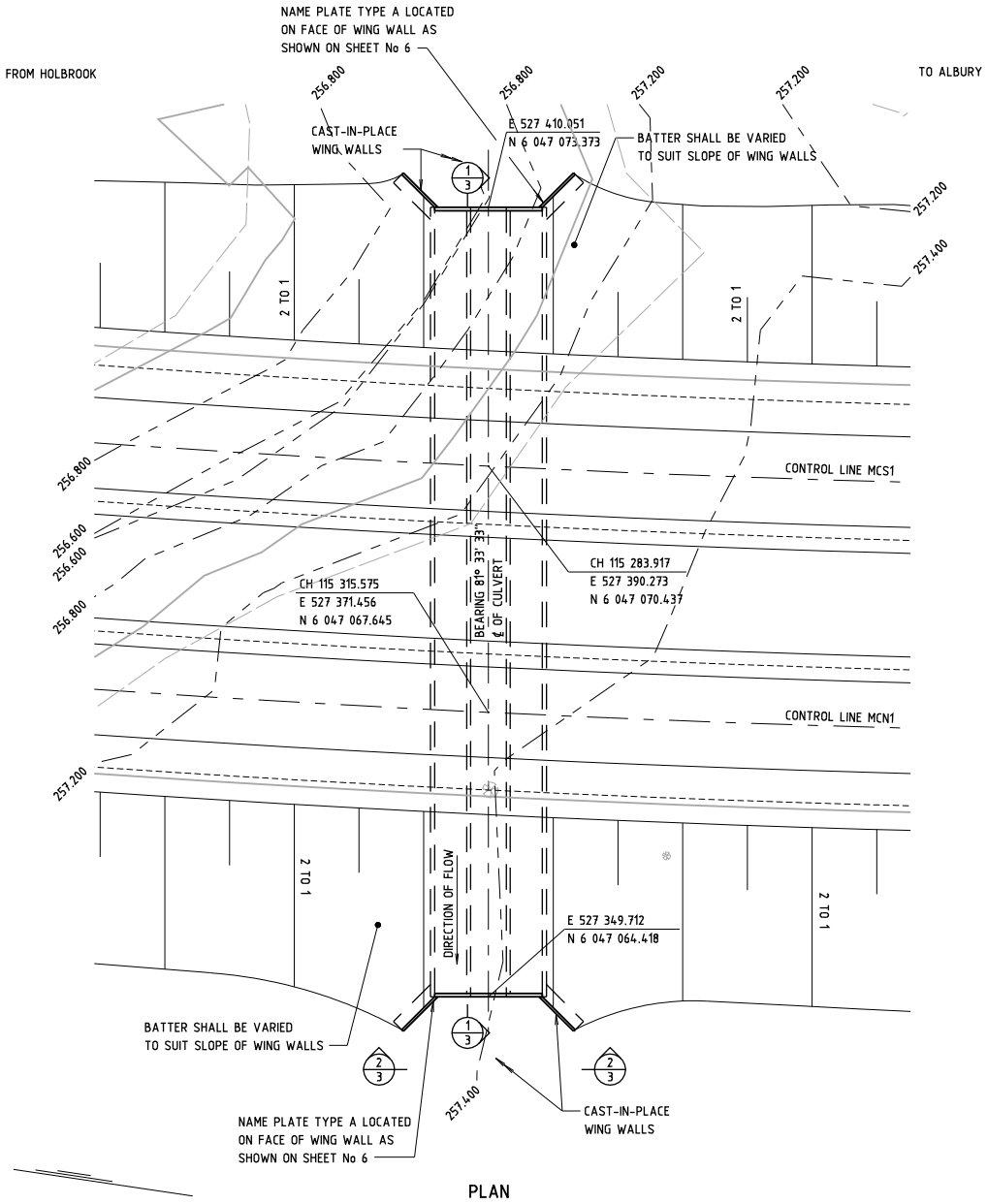

PLAN

FIGURE 32.3.1

ASSUMED PRECAST CONCRETE CROWN UNIT DIMENSIONS

NOMINAL SIZE	OVERALL WIDTH	OVERALL HEIGHT	UNIT LENGTH	LEG THICKNESS AT BASE
2 400 x 1 200	2 670	1 520	1 220	115

IF THE ACTUAL PRECAST CROWN UNIT DIMENSIONS VARY FROM THE VALUES SHOWN ABOVE, THE BASE SLAB, HEADWALL AND WING WALL DIMENSIONS MAY NEED TO BE ADJUSTED.

GENERAL NOTES

SCALE 0 2 4 6 8 10m (2 1) OR AS SHOWN.

DIMENSIONS ARE IN MILLIMETRES.
CHAINAGES, REDUCED LEVELS AND COORDINATES ARE IN METRES.
REDUCED LEVELS ARE RELATED TO AUSTRALIAN HEIGHT DATUM.

CROWN UNITS
2 400 SPAN x 1 200 HIGH x 1 220 LONG, FOR FILL HEIGHT 4 000 TO 6000.
CONCRETE EXPOSURE CLASSIFICATION FOR PRECAST CROWN UNITS: B1.
96 STANDARD PRECAST REINFORECD CONCRETE CROWN UNITS WITH 2 DOWELS FOR LINK SLAB REQUIRED.
4 PRECAST REINFORCED CONCRETE CROWN END UNITS WITH 2 DOWELS FOR LINK SLAB REQUIRED.

LINK SLABS
2 400 SPAN x 1 220 WIDE FOR FILL HEIGHT 4 000 TO 6 000.
CONCRETE EXPOSURE CLASSIFICATION FOR PRECAST LINK SLABS: B1.
48 STANDARD PRECAST REINFORCED CONCRETE LINK SLABS REQUIRED.
2 END PRECAST REINFORCED CONCRETE LINK SLABS REQUIRED.

QA RECORDS COMPLETED AND DRAWINGS RECOMMENDED FOR APPROVAL
SENIOR BRIDGE ENGINEER (NEW DESIGN)
DATE

APPROVED
SENIOR BRIDGE ENGINEER (NEW DESIGN)
DATE

ISSUE	DATE	REVISION	PREP	CHECK	AUTH

ROADS AND TRAFFIC AUTHORITY OF NEW SOUTH WALES

HIGHWAY No 2 — SHIRE OF GREATER HUME

CULVERT AT 115.3km SOUTH OF GUNDAGAI
3 CELL - 2 400 x 1 200 PCBC

GENERAL ARRANGEMENT - SHEET A

NSW GOVERNMENT Transport Roads & Traffic Authority

PREPARED BY BRIDGE ENGINEERING BRANCH
110 GEORGE STREET PARRAMATTA NSW 2150
PHONE (02) 8837-0802 FACSIMILE (02) 8837-0055

CLIENT:

PREPARED	CHECKED	REGISTRATION No OF PLANS
DESIGN		0002 186 BC 0266
DRAWING		RTA BRIDGE NUMBER B10713
SENIOR BRIDGE ENGINEER (NEW DESIGN)		ISSUE STATUS: FOR CONSTRUCTION
		SHEET No 3 ISSUE A

CAD No KP2F3231.dgn

THIS DRAWING IS CONFIDENTIAL AND SHALL ONLY BE USED FOR THE PURPOSE OF THE NOMINATED PROJECT.

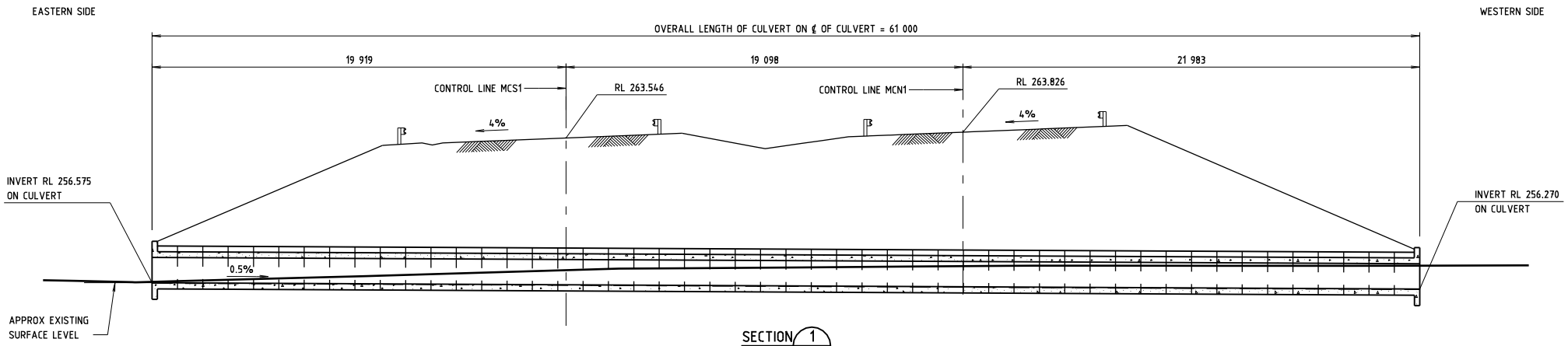

SECTION 1/2

0 1 2 3 4 5m
1 0.5

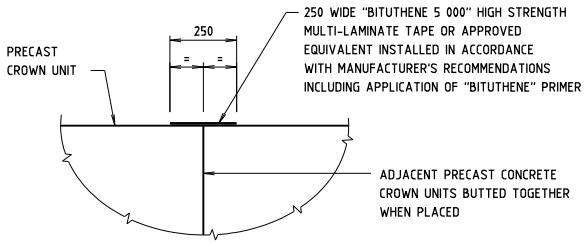

TYPICAL PCBC JOINT DETAIL

0 100 200 300 400 500mm
100 50

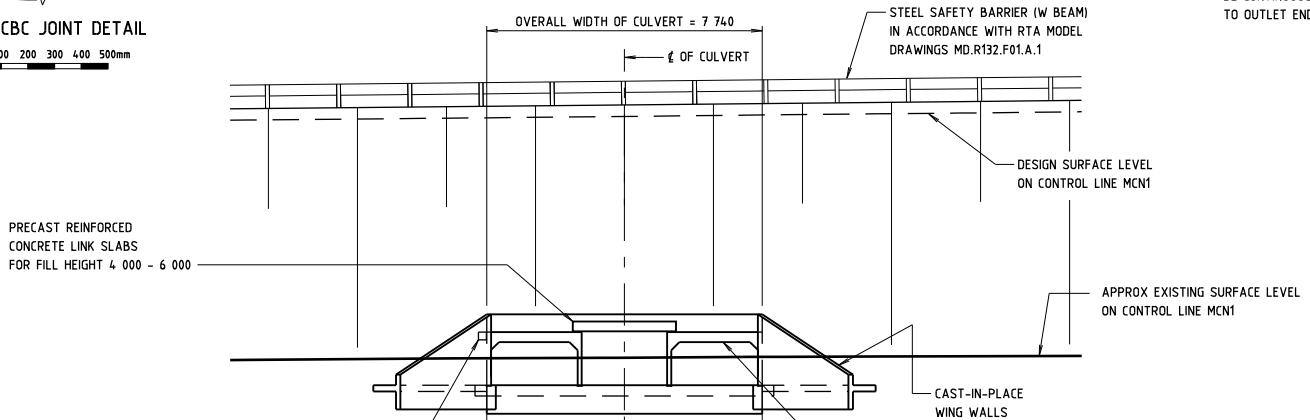

DATUM RL 253.000	END OF CULVERT	℄ OF CULVERT	END OF CULVERT
DESIGN SURFACE LEVEL ON CONTROL LINE MCN1	263.788	263.826	263.865
APRROX EXISTING SURFACE LEVEL ON CONTROL LINE MCN1	257.4	257.4	257.4
CHAINAGE ON CONTROL LINE MCN1	311.705	315.575	319.445
115 km			

VIEW 2/2

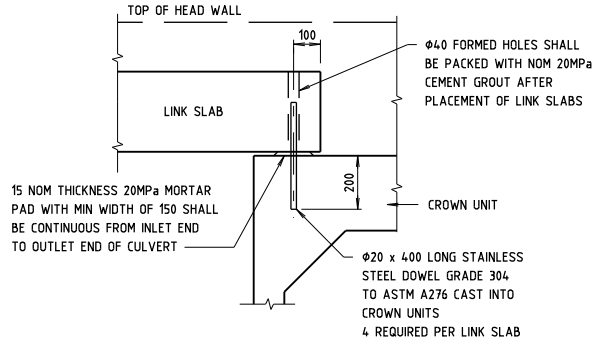

LINK SLAB CONNECTION DETAIL

0 100 200 300 400 500mm
100 50

GENERAL NOTES

SCALE 0 1 500 3 000 4 500mm OR AS SHOWN
1 500 750

FOR OTHER GENERAL NOTES RELATING TO THIS SHEET, SEE SHEET No 2.

ISSUE	DATE	REVISION	PREP	CHECK	AUTH

ROADS AND TRAFFIC AUTHORITY OF NEW SOUTH WALES

HIGHWAY No 2 — SHIRE OF GREATER HUME

CULVERT AT 115.3km SOUTH OF GUNDAGAI
3 CELL - 2 400x 1 200 PCBC

GENERAL ARRANGEMENT - SHEET B

NSW GOVERNMENT Transport Roads & Traffic Authority

PREPARED BY BRIDGE ENGINEERING BRANCH
110 GEORGE STREET PARRAMATTA NSW 2150
PHONE (02) 8837-0802 FACSIMILE (02) 8837-0055

CLIENT:

PREPARED	CHECKED
DESIGN	
DRAWING	

SENIOR BRIDGE ENGINEER (NEW DESIGN)

REGISTRATION No OF PLANS: 0002 186 BC 0266
RTA BRIDGE NUMBER: B10713
ISSUE STATUS: FOR CONSTRUCTION
SHEET No 4 ISSUE A

CAD No KP2F3232.dgn

THIS DRAWING IS CONFIDENTIAL AND SHALL ONLY BE USED FOR THE PURPOSE OF THE NOMINATED PROJECT.

FIGURE 32.3.2

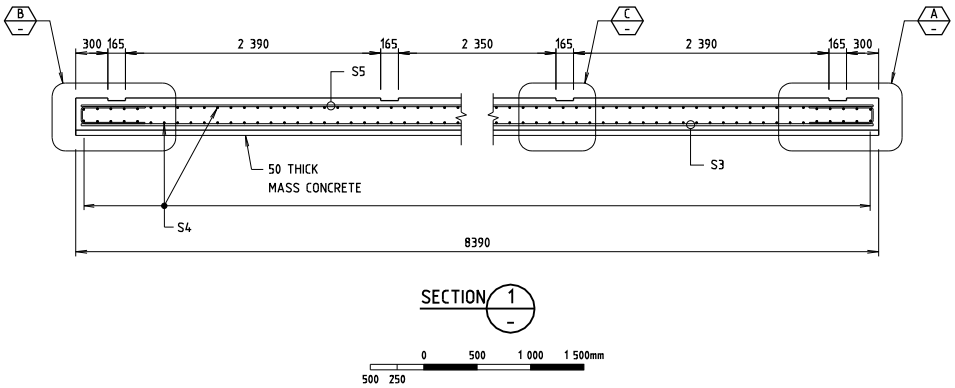

SECTION 1

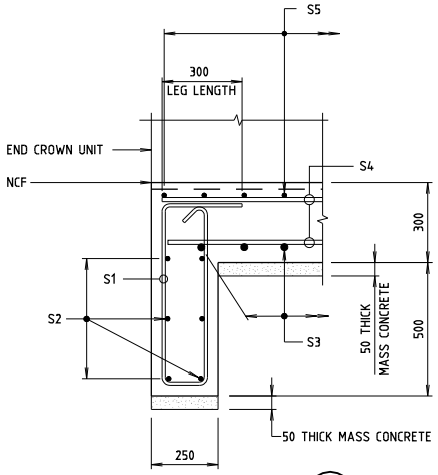

SECTION 2

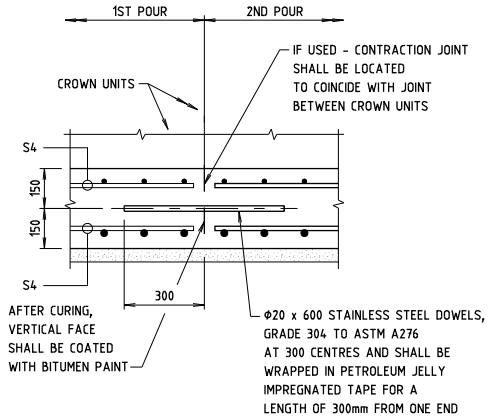

OPTIONAL CONTRACTION JOINT DETAIL

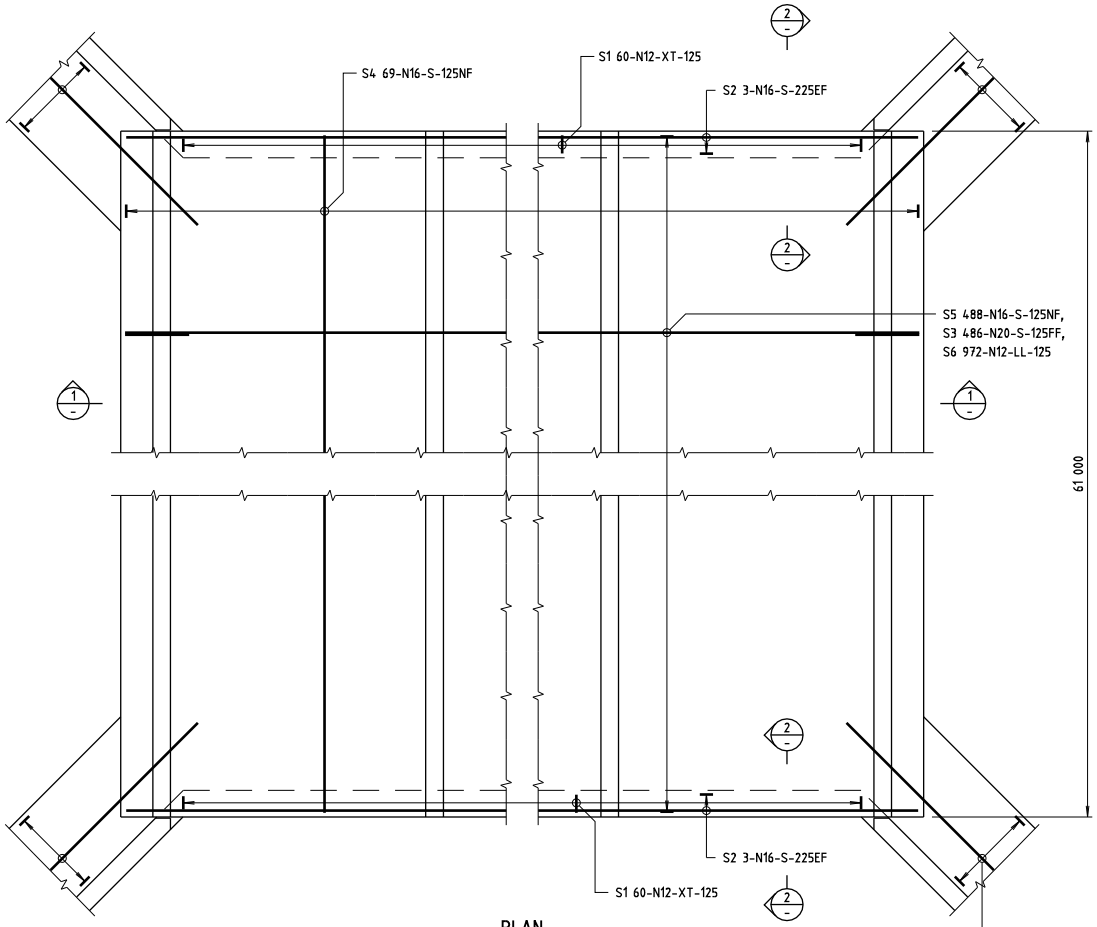

PLAN

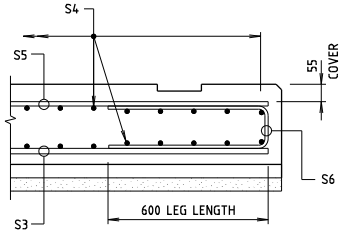

DETAIL A

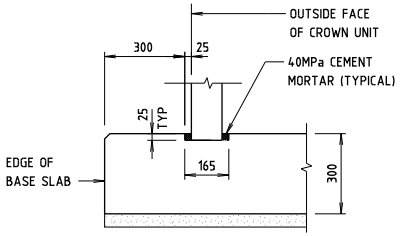

DETAIL B

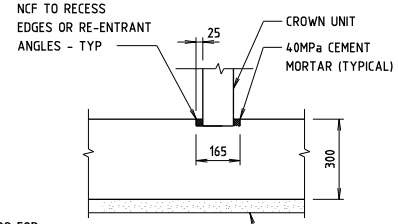

DETAIL C

GENERAL NOTES

SCALE 0 100 200 300 400 500mm (100 50) OR AS SHOWN.

CONCRETE EXPOSURE CLASSIFICATION: B1
MINIMUM 28 DAY COMPRESSIVE STRENGTH OF ALL CONCRETE SHALL BE 40MPa.
EDGES SHALL BE CHAMFERED 20x20 AND RE-ENTRANT ANGLES FILLETED 20x20 UNLESS SPECIFIED OTHERWISE.
NCF DENOTES NO CHAMFER OR FILLET.
ALL CONCRETE DIMENSIONS TO BE CHECKED AND ADJUSTED IF NECESSARY TO SUIT ACTUAL PRECAST CROWN UNITS.
CROWN UNITS TO BE PLACED ON FRESH BED OF CEMENT MORTAR TO ENSURE UNIFORM BEARING IN ACCORDANCE WITH AS 1597.2.
NOMINAL COVER TO REINFORCEMENT NEAREST TO THE CONCRETE SURFACE SHALL BE 40mm UNLESS SPECIFIED OTHERWISE.
UNLESS SHOWN OTHERWISE ON THE DRAWINGS LAPS ON ADJACENT BARS ON ANY FACE SHALL BE STAGGERED (OFFSET) BY NO LESS THAN THE LAP LENGTH.
UNLESS OTHERWISE SPECIFIED, THE MINIMUM DEVELOPMENT LENGTHS AND LENGTHS OF LAPS SHALL BE:

BAR SIZE:	N12	N16	N20	N24	N28	N32	N36
a) HORIZONTAL BARS WITH >300mm OF CONCRETE CAST BELOW THE BAR:	400	500	625	...	1060	...	...
b) OTHER BARS:	300	400	500	...	850	...	...

REINFORCEMENT MAY BE DISPLACED SLIGHTLY WHERE NECESSARY TO CLEAR DOWELS, FORMED HOLES AND RECESSES.

FIGURE 32.4.1

ISSUE	DATE	REVISION	PREP	CHECK	AUTH

ROADS AND TRAFFIC AUTHORITY OF NEW SOUTH WALES

HIGHWAY No 2 — SHIRE OF GREATER HUME

CULVERT AT 115.283km SOUTH OF GUNDAGAI
3 CELL - 2 400 x 1 200 PCBC

CAST-IN-PLACE BASE SLAB

NSW GOVERNMENT — Transport Roads & Traffic Authority

PREPARED BY BRIDGE ENGINEERING BRANCH
110 GEORGE STREET PARRAMATTA NSW 2150
PHONE (02) 8837-0802 FACSIMILE (02) 8837-0055

CLIENT:

PREPARED	CHECKED
DESIGN	
DRAWING	

SENIOR BRIDGE ENGINEER (NEW DESIGN)

REGISTRATION No OF PLANS: 0002 186 BC 0266
RTA BRIDGE NUMBER: B10713
ISSUE STATUS: FOR CONSTRUCTION
SHEET No 4 ISSUE A

CAD No KP2F3241.dgn

THIS DRAWING IS CONFIDENTIAL AND SHALL ONLY BE USED FOR THE PURPOSE OF THE NOMINATED PROJECT.

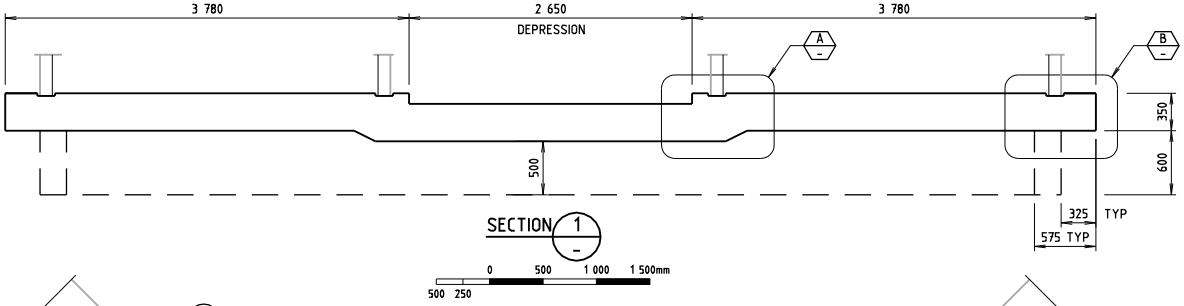

SECTION 1

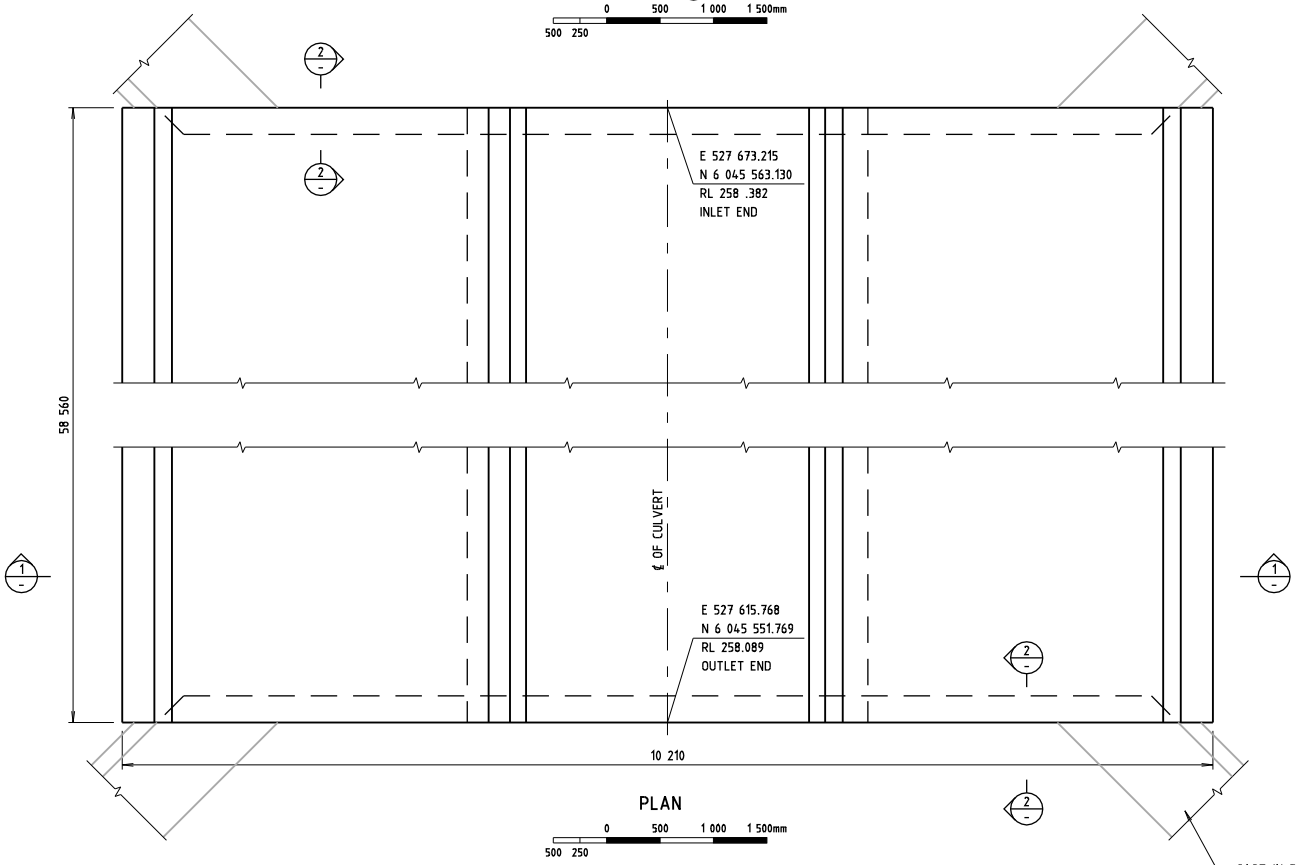

PLAN

CAST-IN-PLACE WING WALLS
FOR DETAILS - SEE SHEET No 7

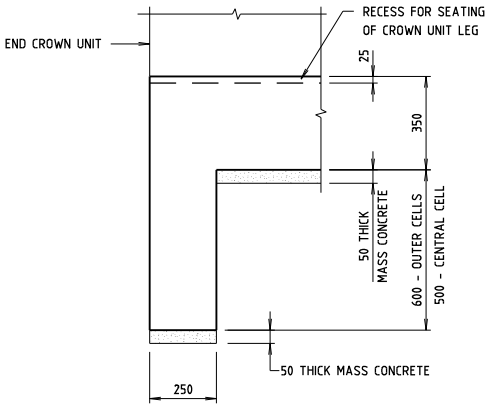

SECTION 2

GENERAL NOTES

SCALE 0 100 200 300 400 500mm OR AS SHOWN.
100 50

CONCRETE EXPOSURE CLASSIFICATION: B1
MINIMUM 28 DAY COMPRESSIVE STRENGTH OF ALL CONCRETE SHALL BE 40MPa.
EDGES SHALL BE CHAMFERED 20x20 AND RE-ENTRANT ANGLES FILLETED 20x20 UNLESS SPECIFIED OTHERWISE.
NCF DENOTES NO CHAMFER OR FILLET.
ALL CONCRETE DIMENSIONS SHALL BE CHECKED AND ADJUSTED IF NECESSARY TO SUIT ACTUAL PRECAST CROWN UNITS USED IN CONSTRUCTION.
CROWN UNITS SHALL BE PLACED ON A FRESH BED OF CEMENT MORTAR TO ENSURE UNIFORM BEARING IN ACCORDANCE WITH AS 1597.2.

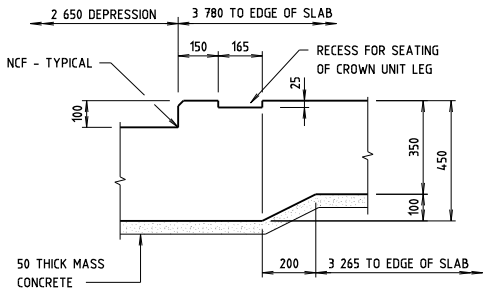

DETAIL A

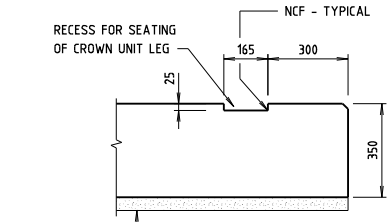

DETAIL B

FIGURE 32.4.2

ISSUE	DATE	REVISION	PREP	CHECK	AUTH

ROADS AND TRAFFIC AUTHORITY OF NEW SOUTH WALES

HIGHWAY No 2 — SHIRE OF GREATER HUME

CULVERT AT 116.8km SOUTH OF GUNDAGAI
3 CELL - 3 000 x 1 500 PCBC

CAST-IN-PLACE BASE SLAB - CONCRETE

Transport Roads & Traffic Authority — NSW GOVERNMENT

PREPARED BY BRIDGE ENGINEERING BRANCH
110 GEORGE STREET PARRAMATTA NSW 2150
PHONE (02) 8837-0802 FACSIMILE (02) 8837-0055

CLIENT:

PREPARED	CHECKED	REGISTRATION No OF PLANS	
DESIGN		0002 186 BC 0268	
DRAWING		RTA BRIDGE NUMBER	B10718
		ISSUE STATUS: FOR CONSTRUCTION	
SENIOR BRIDGE ENGINEER (NEW DESIGN)		SHEET No 4	ISSUE A

CAD No KP2F3242.dgn

THIS DRAWING IS CONFIDENTIAL AND SHALL ONLY BE USED FOR THE PURPOSE OF THE NOMINATED PROJECT.

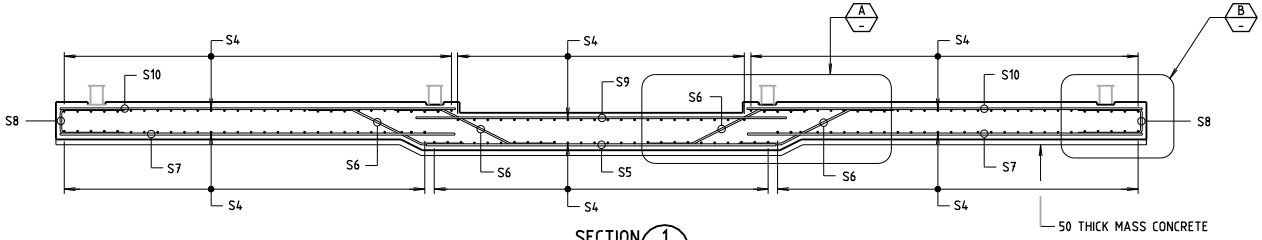

SECTION 1

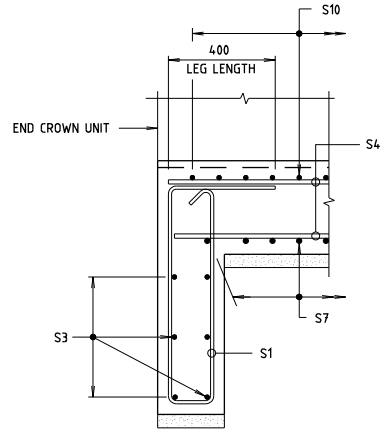

SECTION 2

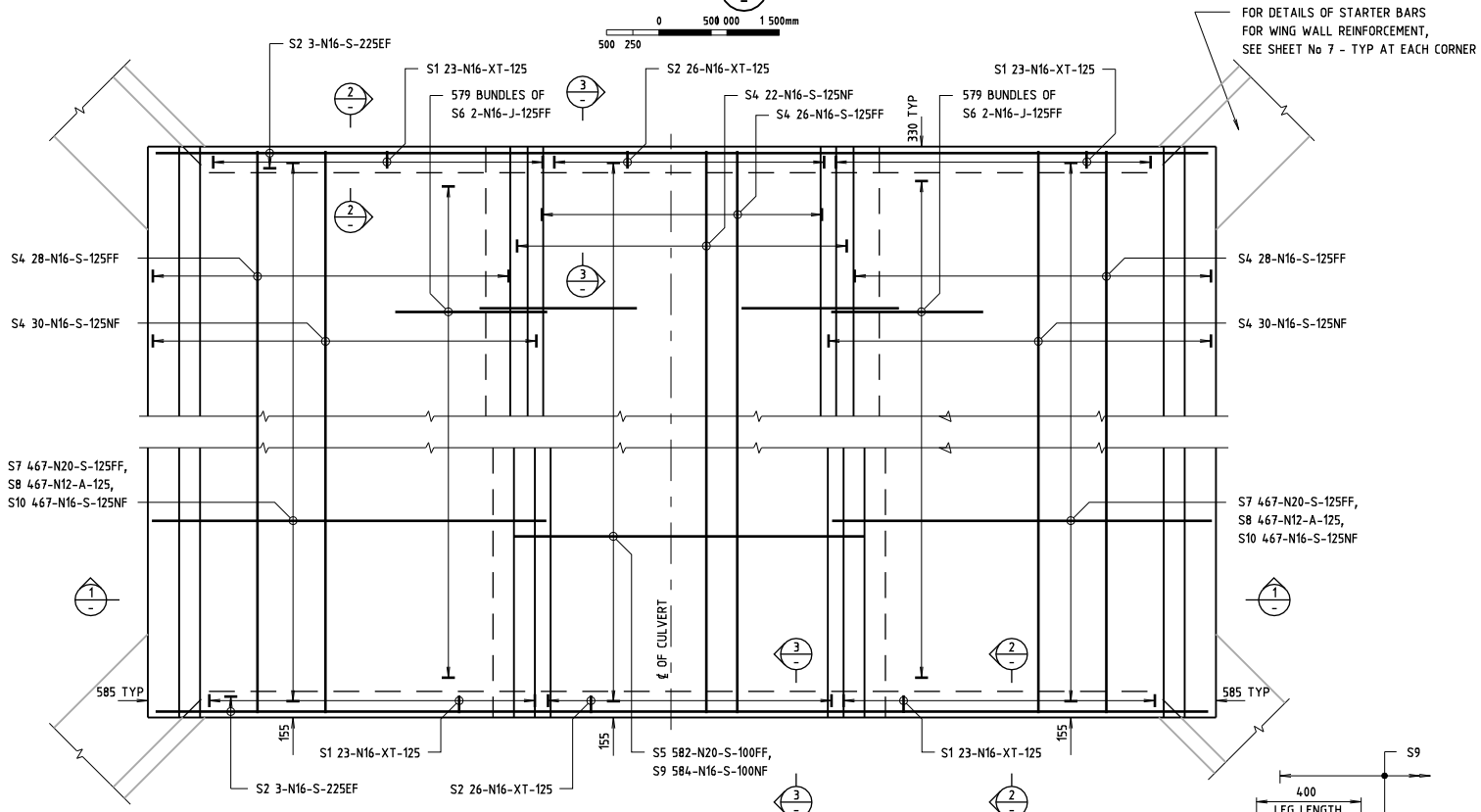

PLAN

GENERAL NOTES

SCALE 0 100 200 300 400 500mm / 100 50 OR AS SHOWN.

NOMINAL COVER TO REINFORCEMENT NEAREST TO THE CONCRETE SURFACE SHALL BE 40 mm UNLESS SPECIFIED OTHERWISE.
UNLESS SHOWN OTHERWISE ON THE DRAWINGS LAPS ON ADJACENT BARS ON ANY FACE SHALL BE STAGGERED (OFFSET) BY NO LESS THAN THE LAP LENGTH.
UNLESS OTHERWISE SPECIFIED, THE MINIMUM DEVELOPMENT LENGTHS AND LENGTHS OF LAPS SHALL BE:

BAR SIZE:	N12	N16	N20	N24	N28	N32	N36
a) HORIZONTAL BARS WITH >300mm OF CONCRETE CAST BELOW THE BAR:	...	500	600	...	...	...	...
b) OTHER BARS:	...	400	500	...	...	...	...

FIGURE 32.4.3

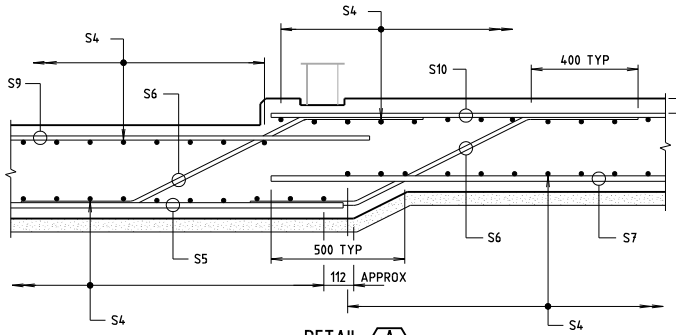

DETAIL A

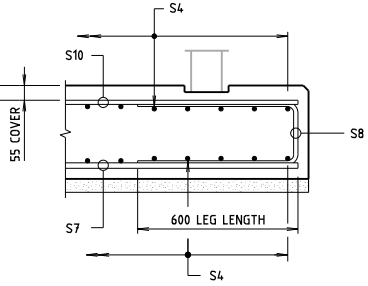

DETAIL B

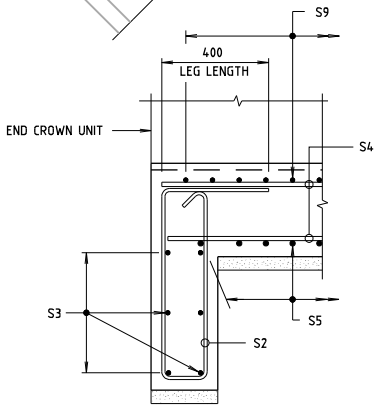

SECTION 3

ISSUE	DATE	REVISION	PREP	CHECK	AUTH

ROADS AND TRAFFIC AUTHORITY OF NEW SOUTH WALES

HIGHWAY No 2 — SHIRE OF GREATER HUME

CULVERT AT 116.8km SOUTH OF GUNDAGAI

3 CELL - 3 000 x 1 500 PCBC

CAST-IN-PLACE BASE SLAB - REINFORCEMENT

NSW GOVERNMENT Transport Roads & Traffic Authority

PREPARED BY BRIDGE ENGINEERING BRANCH
110 GEORGE STREET PARRAMATTA NSW 2150
PHONE (02) 8837-0802 FACSIMILE (02) 8837-0055

CLIENT:

PREPARED	CHECKED	REGISTRATION No OF PLANS
DESIGN		0002 186 BC 0268
DRAWING		RTA BRIDGE NUMBER B10718
SENIOR BRIDGE ENGINEER (NEW DESIGN)		ISSUE STATUS: FOR CONSTRUCTION
		SHEET No / ISSUE A

CAD No KP2F3243.dgn

THIS DRAWING IS CONFIDENTIAL AND SHALL ONLY BE USED FOR THE PURPOSE OF THE NOMINATED PROJECT.

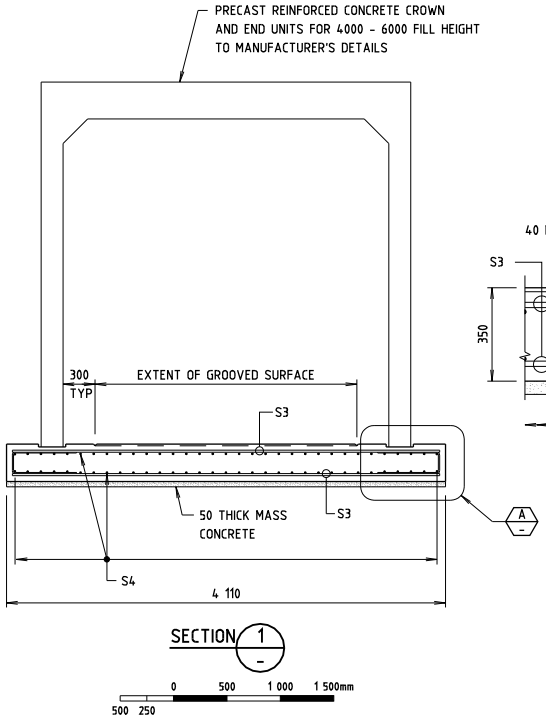

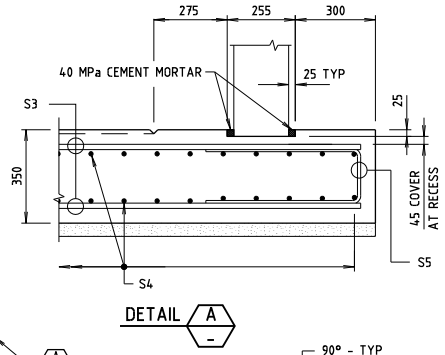

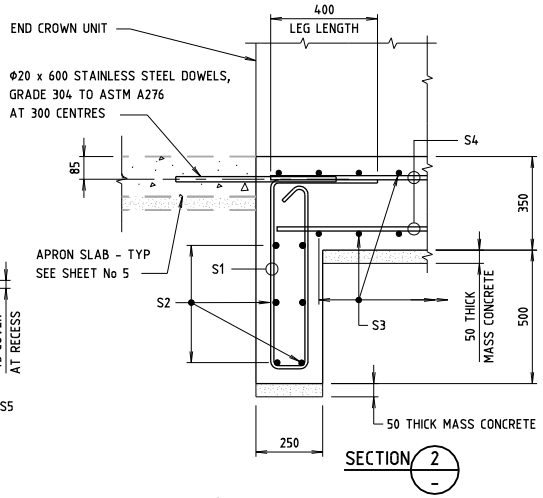

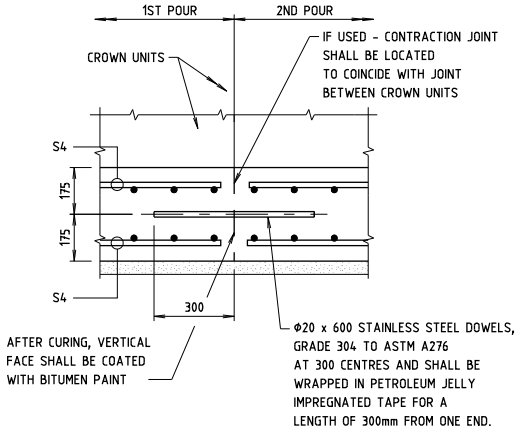

OPTIONAL CONTRACTION JOINT DETAIL

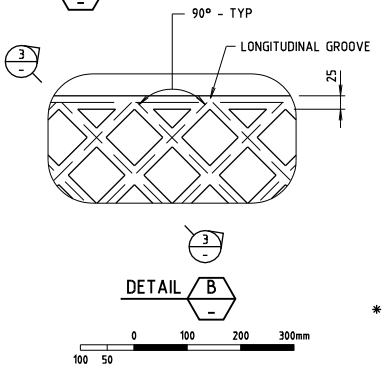

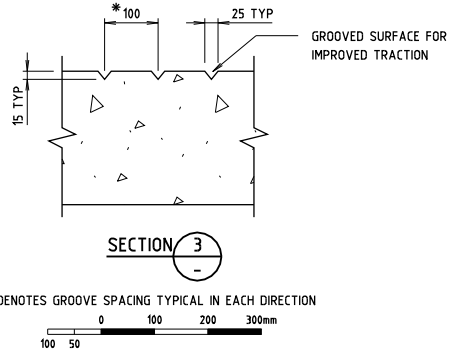

GENERAL NOTES

SCALE 0 100 200 300 400 500mm
100 50

CONCRETE EXPOSURE CLASSIFICATION FOR BASE SLAB: B2
MINIMUM 28 DAY COMPRESSIVE STRENGTH OF ALL CONCRETE SHALL BE 40MPa.
EDGES SHALL BE CHAMFERED 20x20 AND RE-ENTRANT ANGLES FILLETED 20x20 UNLESS SPECIFIED OTHERWISE.
NCF DENOTES NO CHAMFER OR FILLET.
ALL CONCRETE DIMENSIONS TO BE CHECKED AND ADJUSTED IF NECESSARY TO SUIT ACTUAL PRECAST CROWN UNITS USED IN CONSTRUCTION.
CROWN UNITS SHALL BE PLACED ON A FRESH BED OF CEMENT MORTAR TO ENSURE UNIFORM BEARING IN ACCORDANCE WITH AS 1597.2.
NOMINAL COVER TO REINFORCEMENT NEAREST TO THE CONCRETE SURFACE IN THE BASE SLAB SHALL BE 55mm UNLESS SPECIFIED OTHERWISE.
UNLESS SHOWN OTHERWISE ON THE DRAWINGS, LAPS ON ADJACENT BARS ON ANY FACE SHALL BE STAGGERED (OFFSET) BY NO LESS THAN THE LAP LENGTH.
UNLESS OTHERWISE SPECIFIED, THE MINIMUM DEVELOPMENT LENGTHS AND LENGTHS OF LAPS FOR REINFORCING BARS SHALL BE AS FOLLOWS:

BAR SIZE:	N12	N16	N20	N24	N28	N32	N36
a) HORIZONTAL BARS WITH >300mm OF CONCRETE CAST BELOW THE BAR:	375	500	750	...	...	...	...
b) OTHER BARS:	300	400	600	...	...	...	...

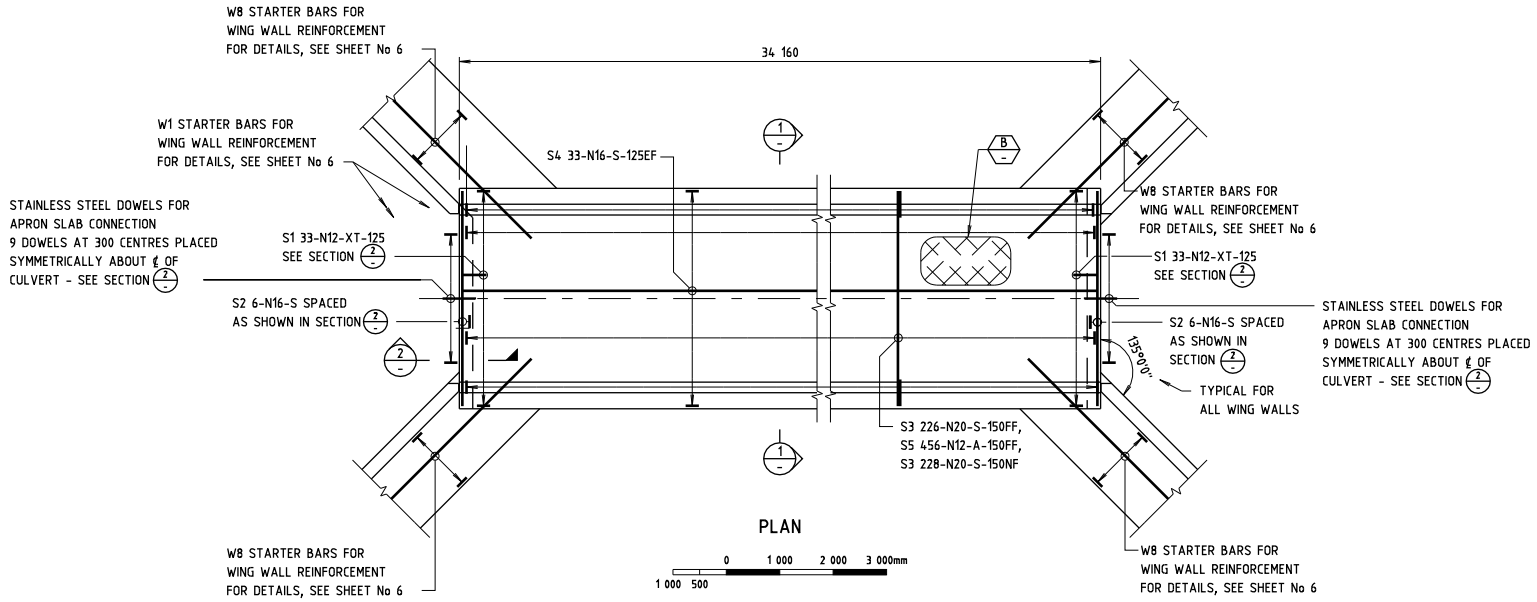

FIGURE 32.4.4

ISSUE	DATE	REVISION	PREP	CHECK	AUTH

ROADS AND TRAFFIC AUTHORITY OF NEW SOUTH WALES

HIGHWAY No 2 — SHIRE OF GREATER HUME

STOCK UNDERPASS
AT 116.72km SOUTH OF GUNDAGAI
3 000 x 3 000 PCBC

CAST-IN-PLACE BASE SLAB

NSW GOVERNMENT Transport Roads & Traffic Authority

PREPARED BY BRIDGE ENGINEERING BRANCH
110 GEORGE STREET PARRAMATTA NSW 2150
PHONE (02) 8837-0802 FACSIMILE (02) 8837-0055

CLIENT:

PREPARED	CHECKED
DESIGN	
DRAWING	

SENIOR BRIDGE ENGINEER (NEW DESIGN)

REGISTRATION No OF PLANS: 0002 186 BC 0263
RTA BRIDGE NUMBER: B10790
ISSUE STATUS: FOR CONSTRUCTION
SHEET No 4 ISSUE A

CAD No KP2F3244.dgn

THIS DRAWING IS CONFIDENTIAL AND SHALL ONLY BE USED FOR THE PURPOSE OF THE NOMINATED PROJECT.

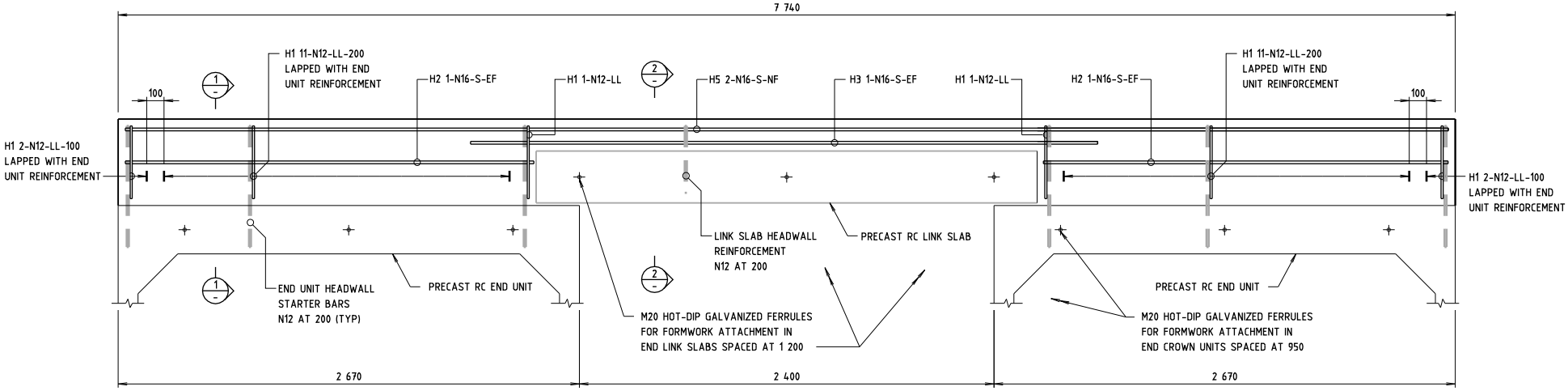

ELEVATION

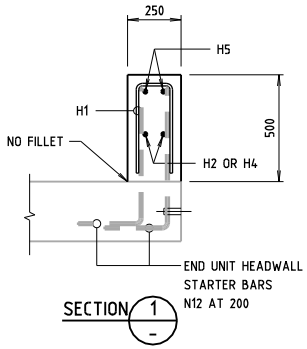

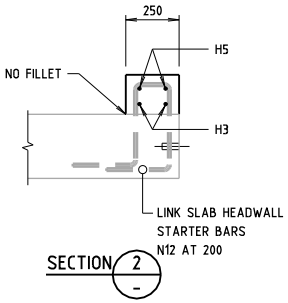

GENERAL NOTES

SCALE 0 250 500 750mm (250 125) OR AS SHOWN.

CONCRETE EXPOSURE CLASSIFICATION: B1.
MINIMUM 28 DAY COMPRESSIVE STRENGTH OF ALL CONCRETE SHALL BE 40MPa.
EDGES SHALL BE CHAMFERED 20x20 AND RE-ENTRANT ANGLES FILLETED 20x20 UNLESS SPECIFIED OTHERWISE.
NCF DENOTES NO CHAMFER OR FILLET.
ALL CONCRETE DIMENSIONS SHALL BE CHECKED AND ADJUSTED IF NECESSARY TO SUIT ACTUAL PRECAST CROWN UNITS USED IN CONSTRUCTION.
NOMINAL COVER TO REINFORCEMENT NEAREST TO THE CONCRETE SURFACE SHALL BE 40mm UNLESS SPECIFIED OTHERWISE.
UNLESS OTHERWISE SHOWN ON THE DRAWING, LAPS ON ADJACENT BARS ON ANY FACE SHALL BE STAGGERED (OFFSET) BY NO LESS THAN THE LAP LENGTH.
UNLESS OTHERWISE SPECIFIED, THE MINIMUM DEVELOPMENT LENGTHS AND LENGTH OF LAPS SHALL BE AS FOLLOWS:

BAR SIZE:	N12	N16	N20	N24	N28	N32	N36
a) HORIZONTAL BARS WITH >300mm OF CONCRETE CAST BELOW THE BAR:	375	500	...	...	...	...	...
b) OTHER BARS:	300	400	...	...	...	...	...

ISSUE	DATE	REVISION	PREP	CHECK	AUTH

ROADS AND TRAFFIC AUTHORITY OF NEW SOUTH WALES

HIGHWAY No 2 — SHIRE OF GREATER HUME

CULVERT AT 115.3km SOUTH OF GUNDAGAI
3 CELL - 2 400 x 1200 PCBC

CAST-IN-PLACE HEADWALLS

NSW GOVERNMENT Transport Roads & Traffic Authority

PREPARED BY BRIDGE ENGINEERING BRANCH
110 GEORGE STREET PARRAMATTA NSW 2150
PHONE (02) 8837-0802 FACSIMILE (02) 8837-0055

CLIENT:

PREPARED	CHECKED
DESIGN	
DRAWING	

SENIOR BRIDGE ENGINEER (NEW DESIGN)

REGISTRATION No OF PLANS: 0002 186 BC 0266
RTA BRIDGE NUMBER: B10713
ISSUE STATUS: FOR CONSTRUCTION
SHEET No 5 ISSUE A

THIS DRAWING IS CONFIDENTIAL AND SHALL ONLY BE USED FOR THE PURPOSE OF THE NOMINATED PROJECT.

FIGURE 32.7.1

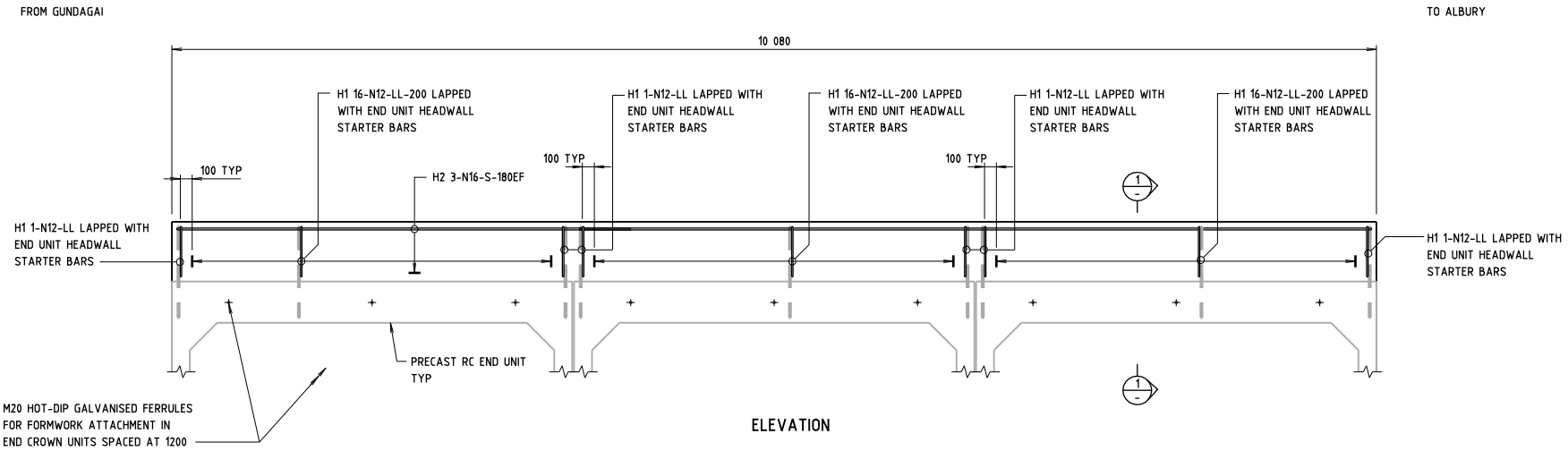

ELEVATION

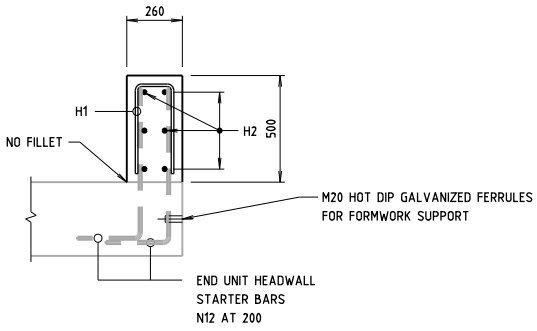

SECTION 1 / -

GENERAL NOTES

SCALE 0 250 500 750mm (250 125) OR AS SHOWN.

CONCRETE EXPOSURE CLASSIFICATION: B1.
MINIMUM 28 DAY COMPRESSIVE STRENGTH OF ALL CONCRETE SHALL BE 40MPa.
EDGES SHALL BE CHAMFERED 20x20 AND RE-ENTRANT ANGLES FILLETED 20x20 UNLESS SPECIFIED OTHERWISE.
NCF DENOTES NO CHAMFER OR FILLET.
ALL CONCRETE DIMENSIONS SHALL BE CHECKED AND ADJUSTED IF NECESSARY TO SUIT ACTUAL PRECAST CROWN UNITS USED IN CONSTRUCTION.
NOMINAL COVER TO REINFORCEMENT NEAREST TO THE CONCRETE SURFACE SHALL BE 40mm UNLESS SPECIFIED OTHERWISE.
UNLESS OTHERWISE SHOWN ON THE DRAWING, LAPS ON ADJACENT BARS ON ANY FACE SHALL BE STAGGERED (OFFSET) BY NO LESS THAN THE LAP LENGTH.

BAR SIZE:	N12	N16	N20	N24	N28	N32	N36
a) HORIZONTAL BARS WITH >300mm OF CONCRETE CAST BELOW THE BAR:	375	500	...	...	...	...	...
b) OTHER BARS:	300	400	...	...	...	...	...

ISSUE	DATE	REVISION	PREP	CHECK	AUTH

ROADS AND TRAFFIC AUTHORITY OF NEW SOUTH WALES

HIGHWAY No 2 — SHIRE OF GREATER HUME

CULVERT AT HOLBROOK CREEK
AT 1.4km SOUTH OF HOLBROOK
3 CELL - 3000 x 1500 PCBC

CAST-IN-PLACE HEADWALLS

NSW GOVERNMENT Transport Roads & Traffic Authority

PREPARED BY BRIDGE ENGINEERING BRANCH
110 GEORGE STREET PARRAMATTA NSW 2150
PHONE (02) 8837-0802 FACSIMILE (02) 8837-0055

CLIENT:

PREPARED	CHECKED
DESIGN	
DRAWING	
SENIOR BRIDGE ENGINEER (NEW DESIGN)	

REGISTRATION No OF PLANS 0002 186 BC 0267

RTA BRIDGE NUMBER B7985

ISSUE STATUS: FOR CONSTRUCTION

SHEET No 6 ISSUE A

THIS DRAWING IS CONFIDENTIAL AND SHALL ONLY BE USED FOR THE PURPOSE OF THE NOMINATED PROJECT.

FIGURE 32.7.2

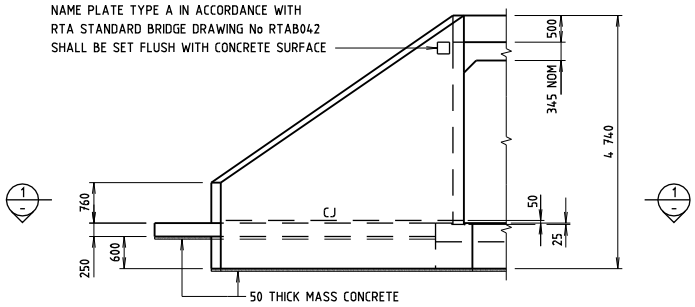

ELEVATION

SOUTHWESTERN WING WALL SHOWN - OTHER WING WALLS SIMILAR

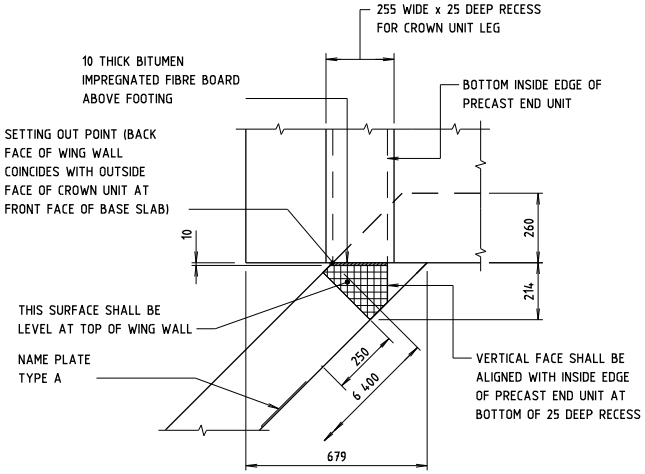

DETAIL A

REINFORCEMENT NOT SHOWN

0 100 200 300 400 500mm
100 50

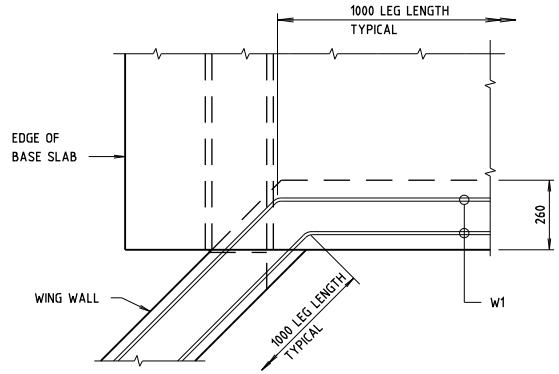

DETAIL A

WING WALL STARTER BARS FROM BASE SLAB DOWNTURN SHOWN ONLY

0 100 200 300 400 500mm
100 50

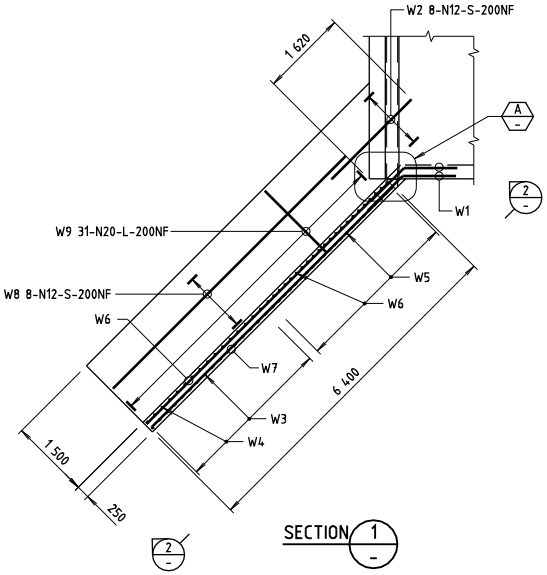

SECTION 1

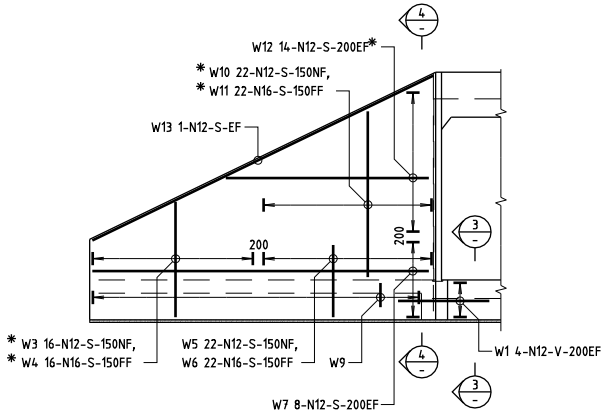

VIEW 2

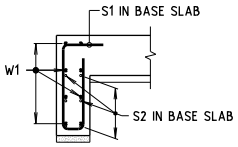

SECTION 3

0 200 400 600 800 1 000mm
200 100

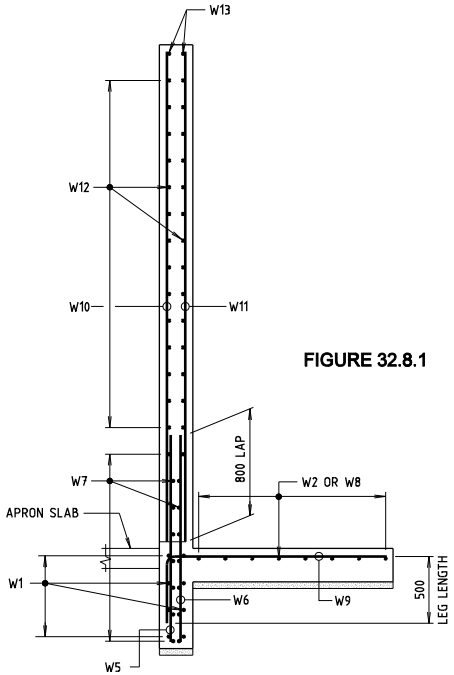

SECTION 4

0 200 400 600 800 1 000mm
200 100

FIGURE 32.8.1

GENERAL NOTES

SCALE 0 1 000 2 000 3 000mm / 1 000 500 OR AS SHOWN.

CONCRETE EXPOSURE CLASSIFICATION: B1
MINIMUM 28 DAY COMPRESSIVE STRENGTH OF CONCRETE SHALL BE 40MPa.
EDGES SHALL BE CHAMFERED 20 x 20 AND RE-ENTRANT ANGLES FILLETED 20 x 20 UNLESS OTHERWISE SPECIFIED.
Φ50 WEEPHOLES, LOCATED 150mm ABOVE FINISHED SURFACE LEVEL AT THE FRONT FACE OF THE WING WALLS, SHALL BE PROVIDED AT 1500 CENTRES.
CJ DENOTES CONSTRUCTION JOINT.
DENOTES DIMENSION SHALL BE ADJUSTED TO SUIT ACTUAL DIMENSIONS OF PRECAST END UNITS USED IN CONSTRUCTION.
ALL CONCRETE DIMENSIONS SHALL BE CHECKED AND ADJUSTED IF NECESSARY TO SUIT ACTUAL DIMENSIONS OF PRECAST END UNITS USED IN CONSTRUCTION.
NOMINAL COVER TO REINFORCEMENT NEAREST TO THE CONCRETE SURFACE SHALL BE 40mm UNLESS SPECIFIED OTHERWISE.
UNLESS SHOWN OTHERWISE ON THE DRAWING, LAPS ON ADJACENT BARS ON ANY FACE SHALL BE STAGGERED (OFFSET) BY NO LESS THAN THE LAP LENGTH.
UNLESS OTHERWISE SPECIFIED, THE MINIMUM DEVELOPMENT LENGTHS AND LENGTH OF LAPS FOR REINFORCING BARS SHALL BE AS FOLLOWS:

BAR SIZE:	N12	N16	N20	N24	N28	N32	N36
a) HORIZONTAL BARS WITH >300mm OF CONCRETE CAST BELOW THE BAR:	375	500	...	...	...	...	...
b) OTHER BARS:	300	400	...	...	...	...	...

* DENOTES VARIABLE LENGTH BAR

ISSUE	DATE	REVISION	PREP	CHECK	AUTH

ROADS AND TRAFFIC AUTHORITY OF NEW SOUTH WALES

HIGHWAY No 2 — SHIRE OF GREATER HUME

STOCK UNDERPASS
AT 116.72km SOUTH OF GUNDAGAI
3 000 x 3 000 PCBC

CAST-IN-PLACE WING WALLS

NSW GOVERNMENT Transport Roads & Traffic Authority

PREPARED BY BRIDGE ENGINEERING BRANCH
110 GEORGE STREET PARRAMATTA NSW 2150
PHONE (02) 8837-0802 FACSIMILE (02) 8837-0055

CLIENT:

PREPARED	CHECKED	REGISTRATION No OF PLANS	
DESIGN		0002 186 BC 0263	
DRAWING		RTA BRIDGE NUMBER	B10790
		ISSUE STATUS: FOR CONSTRUCTION	
SENIOR BRIDGE ENGINEER (NEW DESIGN)		SHEET No 6	ISSUE A

CAD No KP2F32B1.dgn

THIS DRAWING IS CONFIDENTIAL AND SHALL ONLY BE USED FOR THE PURPOSE OF THE NOMINATED PROJECT.

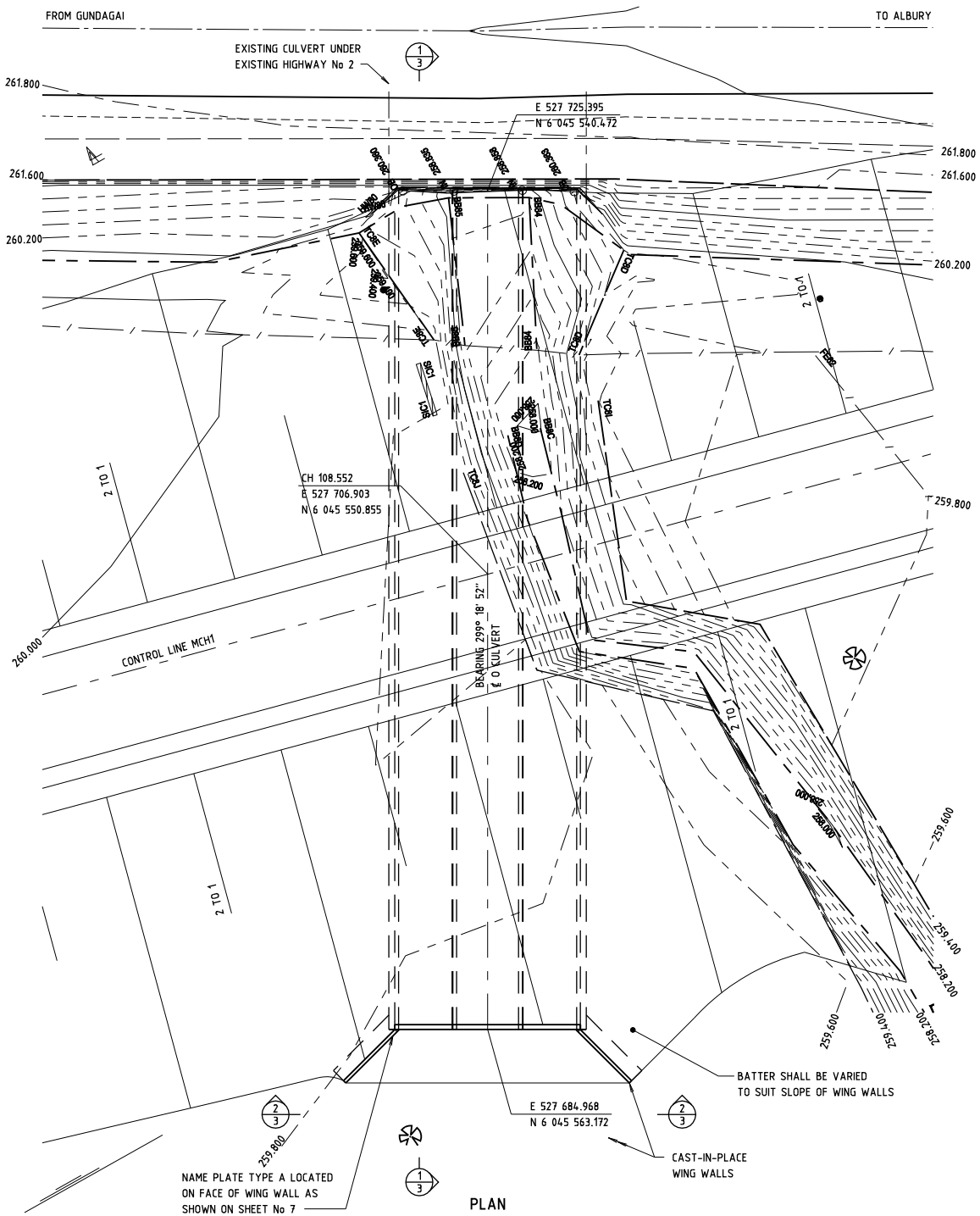

ASSUMED PRECAST CONCRETE CROWN UNIT DIMENSIONS

NOMINAL SIZE	OVERALL WIDTH	OVERALL HEIGHT	UNIT LENGTH	LEG THICKNESS AT BASE
3 000 x 1 500	3 350	1 895	1 220	150

IF THE ACTUAL PRECAST CROWN UNIT DIMENSIONS VARY FROM THE VALUES SHOWN ABOVE, THE BASE SLAB, HEADWALL AND WING WALL DIMENSIONS MAY NEED TO BE ADJUSTED.

GENERAL NOTES

SCALE 0 2.5 5.0 7.5m / 2.5 1.25 OR AS SHOWN.

DIMENSIONS ARE IN MILLIMETRES.
CHAINAGES, REDUCED LEVELS AND COORDINATES ARE IN METRES.
REDUCED LEVELS ARE RELATED TO AUSTRALIAN HEIGHT DATUM.

NAME PLATE TYPE A SHALL BE ATTACHED TO THE FACE OF EXISTING SOUTHERN WING WALL AT INLET END IN A SUITABLE MANNER.

CROWN UNITS
3 000 SPAN x 1 500 HIGH x 1 220 LONG, FOR FILL HEIGHT 8 000 TO 9 000.
CONCRETE EXPOSURE CLASSIFICATION FOR PRECAST CROWN UNITS: B1.
108 STANDARD PRECAST REINFORCED CONCRETE CROWN UNITS REQUIRED.
6 PRECAST REINFORCED CONCRETE END UNITS REQUIRED.

QA RECORDS COMPLETED AND DRAWINGS RECOMMENDED FOR APPROVAL
SENIOR BRIDGE ENGINEER (NEW DESIGN)
DATE

APPROVED
SENIOR BRIDGE ENGINEER (NEW DESIGN)
DATE

FIGURE 32.10.1

ISSUE	DATE	REVISION	PREP	CHECK	AUTH

ROADS AND TRAFFIC AUTHORITY OF NEW SOUTH WALES

HIGHWAY No 2 — SHIRE OF GREATER HUME

CULVERT AT UNNAMED CREEK
AT 1.4km SOUTH OF HOLBROOK
3 CELL - 3 000 x 1 500 PCBC - EXTENSION

GENERAL ARRANGEMENT - SHEET A

NSW GOVERNMENT Transport Roads & Traffic Authority

PREPARED BY BRIDGE ENGINEERING BRANCH
110 GEORGE STREET PARRAMATTA NSW 2150
PHONE (02) 8837-0802 FACSIMILE (02) 8837-0055

CLIENT:

PREPARED	CHECKED	REGISTRATION No OF PLANS	
DESIGN		0002 186 BC 0267	
DRAWING		RTA BRIDGE NUMBER	B7895
		ISSUE STATUS: FOR CONSTRUCTION	
SENIOR BRIDGE ENGINEER (NEW DESIGN)		SHEET No 2	ISSUE A

CAD No KP2F32101.dgn

THIS DRAWING IS CONFIDENTIAL AND SHALL ONLY BE USED FOR THE PURPOSE OF THE NOMINATED PROJECT.

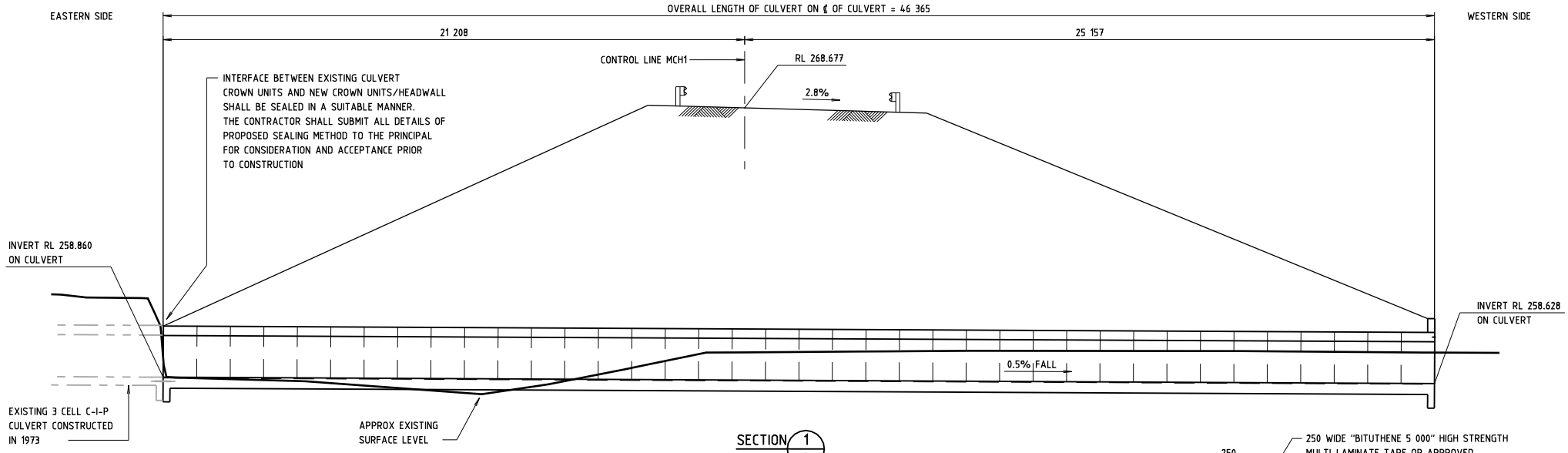

SECTION 1/2

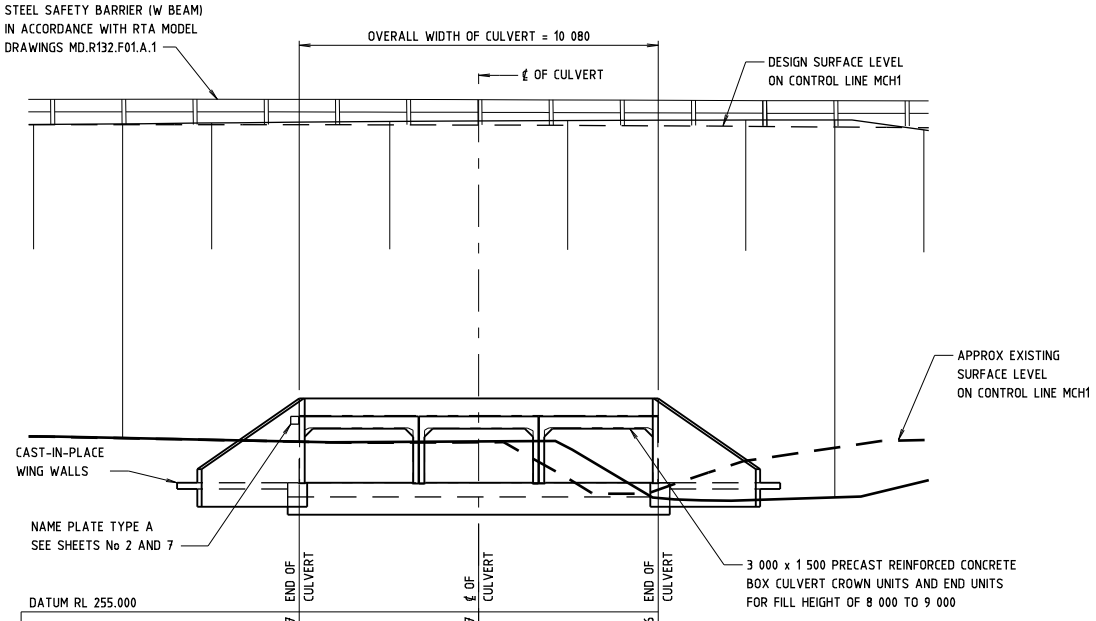

DATUM RL 255.000	END OF CULVERT	℄ OF CULVERT	END OF CULVERT
DESIGN SURFACE LEVEL ON CONTROL LINE MCH1	268.687	268.677	268.656
APRROX EXISTING SURFACE LEVEL ON CONTROL LINE MCH1	259.8	259.8	258.4
CHAINAGE ON CONTROL LINE MCH1	103.512	108.552	113.592

VIEW 2/2

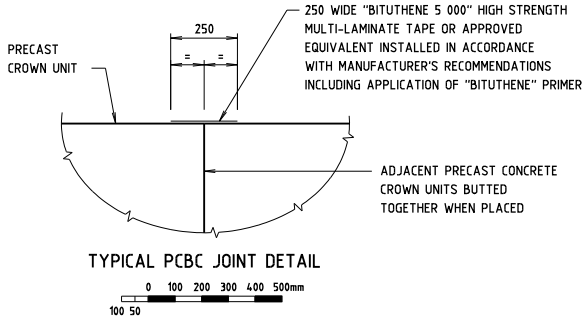

TYPICAL PCBC JOINT DETAIL

0 100 200 300 400 500mm
100 50

GENERAL NOTES

SCALE 0 1 500 3 000 4 500mm OR AS SHOWN
1 500 750

FOR OTHER GENERAL NOTES RELATING TO THIS SHEET, SEE SHEET No 2.

ISSUE	DATE	REVISION	PREP	CHECK	AUTH

ROADS AND TRAFFIC AUTHORITY OF NEW SOUTH WALES

HIGHWAY No 2 — SHIRE OF GREATER HUME

CULVERT AT UNNAMED CREEK
AT 1.4km SOUTH OF HOLBROOK
3 CELL - 3 000 x 1 500 PCBC - EXTENSION

GENERAL ARRANGEMENT - SHEET B

NSW GOVERNMENT Transport Roads & Traffic Authority

PREPARED BY BRIDGE ENGINEERING BRANCH
110 GEORGE STREET PARRAMATTA NSW 2150
PHONE (02) 8837-0802 FACSIMILE (02) 8837-0055

CLIENT:

PREPARED	CHECKED
DESIGN	
DRAWING	

SENIOR BRIDGE ENGINEER (NEW DESIGN)

REGISTRATION No OF PLANS: 0002 186 BC 0267
RTA BRIDGE NUMBER: B7895
ISSUE STATUS: FOR CONSTRUCTION
SHEET No 3 ISSUE A

CAD No KP2F32102.dgn

THIS DRAWING IS CONFIDENTIAL AND SHALL ONLY BE USED FOR THE PURPOSE OF THE NOMINATED PROJECT.

FIGURE 32.10.2