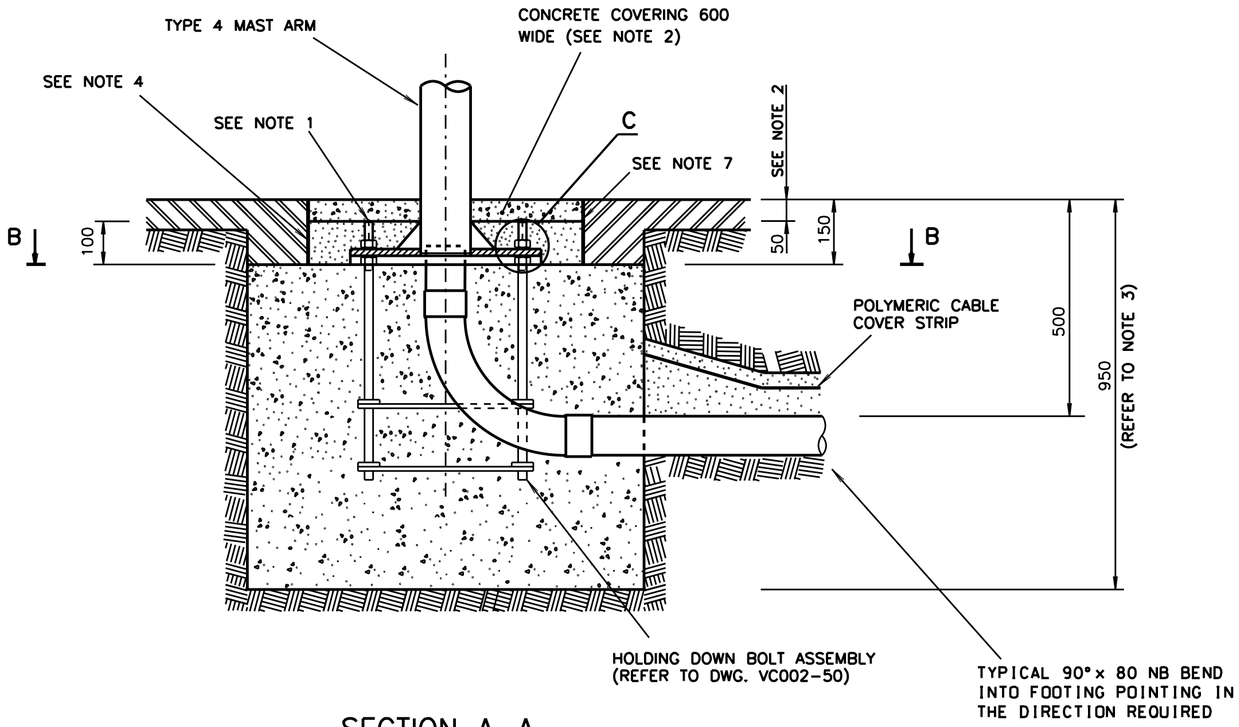

SECTION A–A

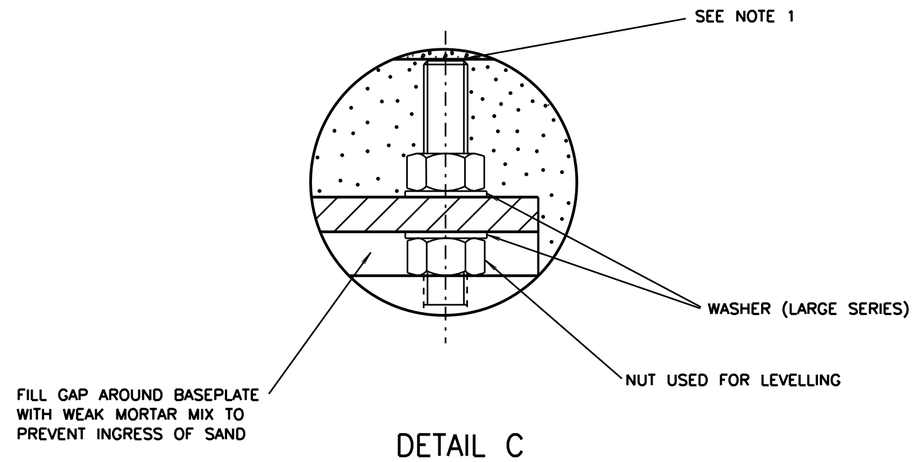

DETAIL C

SCALE 1:2

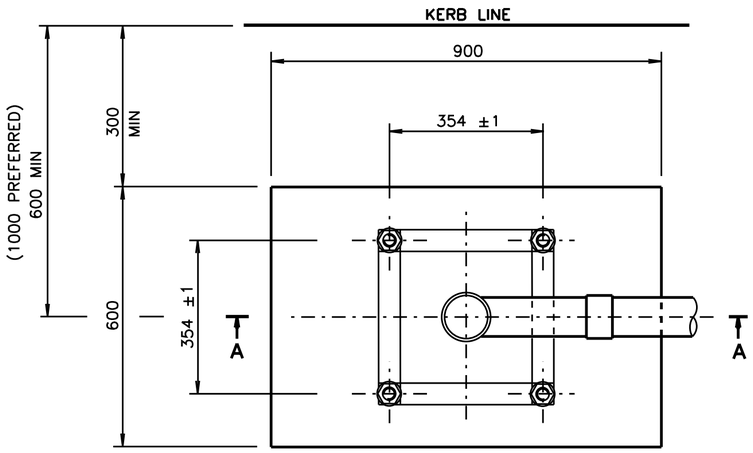

SECTION B–B

(MAST ARM & TOP COVERING)

LEGEND

- FOOTPATH
- CONCRETE
- SAND

NOTES

1. A MINIMUM OF 3 BOLT THREADS TO PROTRUDE OUT OF THE NUT. THE EXPOSED THREAD IS TO BE COVERED WITH PVC TUBE OR TAPE.
2. FINISH MAST ARM MOUNTING AREA WITH 50mm CONCRETE 600x600mm. ASPHALT SHALL BE USED INSTEAD OF CONCRETE WHEN REQUIRED BY THE MUNICIPAL AUTHORITY.
3. THE TOTAL FOOTING DEPTH OF 950mm MAY NEED TO BE INCREASED FOR MAST ARMS INSTALLED IN UNPAVED AREAS WITH UNSTABLE SOIL.
4. MASTIC EXPANSION JOINTS ARE TO BE USED BETWEEN THE TOP OF THE POST FOOTING AND ALL CONCRETE SURFACES, INCLUDING PAVEMENT JUNCTION PITS BUT ONLY WHEN THE CONCRETE IS INSTALLED AS A SINGLE CONCRETE POUR.
5. THE COMPLETE FOOTING TO BE CAST IN SITU IN ONE SINGLE CONCRETE POURING OPERATION. PRECAST FOOTING ARE NOT TO BE USED.
6. IN SITUATIONS WHERE THE FOOTING IS IN BACKFILL, eg THE FINISHED GROUND LEVEL BEING HIGHER THAN THE EXISTING GROUND LEVEL, THE FOOTING SHALL BE BUILT AFTER THE GROUND HAS BEEN BACKFILLED AND COMPACTED TO THE REQUIRED SOIL STRENGTH.
7. WHERE THE FOOTING IS INSTALLED IN AN UNSEALED FOOTWAY, A SUITABLE SQUARE MASTIC EXPANSION JOINT BOX FRAME SHALL BE PROVIDED FOR THE FULL 150mm FROM THE TOP OF THE CONCRETE FOOTING TO PREVENT THE SAND FROM BEING WASHED AWAY UNDER THE CONCRETE COVERING.
8. ALL CONCRETE SURFACE FINISH TO BE IN ACCORDANCE WITH SPECIFICATION QA R54, SECTION 5.1.

DIMENSIONS ARE IN MILLIMETRES

A ORIGINAL ISSUE		
B ISSUE 05-06-2015 AREA OF CONCRETE COVER REDUCED TO 600x600mm. NOTES 5, 6 & 7 ADDED. DB BWT		
C ISSUE 10-07-2020 NOTE 4 AMENDED. ZH BWT		
D ISSUE 10-12-2022 NOTE 8 ADDED. IH BWT		

REFERENCE DRAWINGS	
TYPE 4 MAST ARM	VM203-26
TYP EXCAVATION	VC001-9
BOLT ASSEMBLY	VC002-50

DRAWN	I. HAYES 02-07-2009
CHECKED	B. TAYLOR 08-07-2009
PASSED	B. TAYLOR 08-07-2009
APPROVED	S. SRIVASTAVA
MANAGER STDS & QUAL	
DATE	08-07-2009

TRANSPORT FOR NSW

TRAFFIC SIGNALS

FOOTING FOR TYPE 4 MAST ARM

SHEET SIZE	FILE NO	SCALE	SHEET NO
A2		1:10	

SUPERSEDES: – ISSUE A B C D

REG NO VC002–75