Engineering Manual
Signals
Maintenance

TMG E1280

ROAD LEVEL CROSSING PROTECTION EQUIPMENT

Version 1.0

Issued November 2012

Engineering Manual

Owner:	Chief Engineer, Signals & Control Systems		
Approved by:	Warwick Allison Chief Engineer Signals & Control Systems	Authorised by:	Paul Szacsvay Principal Engineer Signal Research & Development

Disclaimer

This document was prepared for use on the RailCorp Network only.

RailCorp makes no warranties, express or implied, that compliance with the contents of this document shall be sufficient to ensure safe systems or work or operation. It is the document user's sole responsibility to ensure that the copy of the document it is viewing is the current version of the document as in use by RailCorp.

RailCorp accepts no liability whatsoever in relation to the use of this document by any party, and RailCorp excludes any liability which arises in any manner by the use of this document.

Copyright

The information in this document is protected by Copyright and no part of this document may be reproduced, altered, stored or transmitted by any person without the prior consent of RailCorp.

NSW Transport RailCorp

Document control

Version	Date	Summary of change
1.0	23 November 2012	First issue

This Manual replaces Manual No. SC 07 60 01 00 EQ Road Level Crossing Protection Equipment version 1.0 dated June 1999.

Summary of changes from previous version

Summary of change	Section
Initial update of SC07600100EQ prepared by Jason Firmstone and renumbered TMG E1280. Document reformatted to comply with TMA 400 Engineering Publications Manual.	All

Contents

1 Introduction 5
1.1 Scope of this manual 5
1.2 Referenced documents 6
2 Description of equipment 6
2.1 Road approach signs 6
2.2 Early warning signals 9
2.3 Type F flashing lights 9
2.4 Bells 11
2.5 Road Barrier Mechanisms 13
2.5.1 WRRS Type B 13
2.5.2 WRRS Type D 14
2.5.3 Western Cullen Hayes Type 3590 15
2.5.4 Western Cullen Hayes Type 3593 15
2.5.5 Harmon Type H1 16
2.5.6 Westinghouse Type EB 17
2.6 Power supply 17
2.7 Flashers 17
2.8 Level Crossing Monitor 18
3 Principles of operation 18
3.1 Level crossing protection 18
3.2 Boom barrier mechanisms 18
4 Operational and functional checks 19
4.1 Intervals 19
4.2 Type F flashing lights (all types) 19
4.2.1 Voltage at lamps 19
4.2.2 Lamp alignment 19
4.2.3 Flash rate 20
4.2.4 Roundels, covers and fasteners 20
4.3 Bells 20
4.3.1 External 20
4.3.2 Internal 20
4.4 Road boom barriers 20
4.4.1 All types 20
4.4.1.1 Boom lights 20
4.4.1.2 Reflective treatment 21
4.4.2 Timber Booms 21
4.4.3 Aluminium / GRP and GRP booms 21
4.5 Road boom mechanisms (all types) 21
4.5.1.1 Hold clear device 21
4.5.1.2 Boom angle 24
4.5.1.3 Speed of operation 25
4.6 Power supply 26
4.6.1 Batteries 26

4.6.1.1 For a level crossing not fitted with a level crossing monitor 26
4.6.1.2 For a level crossing fitted with a level crossing monitor 26
4.6.2 Battery charger 26
4.6.2.1 For a level crossing not fitted with a level crossing monitor 26
4.6.2.2 For a level crossing fitted with a level crossing monitor 27
4.7 Level crossing monitor 27
4.8 Train detection 27
5 On-site maintenance 27
5.1 Recommended tools 27
5.2 Type F lights 28
5.3 Bells 28
5.4 Road boom barriers 28
5.4.1 All types 28
5.4.2 Timber booms 28
5.4.3 GRP and aluminium/GRP booms 28
5.5 Boom gate mechanisms 29
5.5.1 All types 29
5.5.2 WRRS B Type mechanism 35
5.5.2.1 Circuit controller adjustment and settings 35
5.5.2.2 Motor 35
5.5.3 WRRS Type D mechanism 37
5.5.3.1 Circuit controller adjustment and settings 37
5.5.3.2 Motor 37
5.5.4 Western Cullen Hayes Type 3590 and 3593 mechanisms 38
5.5.4.1 Circuit controller adjustments and settings 38
5.5.4.2 Motor 38
5.5.5 Harmon H1 mechanism 39
5.5.5.1 Circuit Controller adjustment and settings 39
5.5.5.2 Motor 39
5.5.6 Westinghouse EB mechanism 40
5.5.6.1 Circuit controller adjustment and settings 40
5.5.6.2 Power down contact 40
5.5.6.3 Motor 40
6 Installation of level crossing equipment 47
6.1 Type F lights 47
6.1.1 Alignment (focusing) of level crossing signals 49
6.1.2 Additional background 53
6.2 Bells 55
6.2.1 Electronic Bell Installation and Adjustment 55
6.3 Boom mechanisms 56
6.3.1 Assembly of mechanism on post (where not supplied pre-assembled) 56
6.3.2 Assembly of boom arm 57
6.3.3 Counterweighing 60

1 Introduction

Intersections between road and rail, known as level crossings or grade crossings have, from the earliest days of railways, presented a high risk of collision between road vehicles and trains and this risk has increased as train and road vehicle speeds and volume have increased.

In earlier times where traffic volume warranted, such as in the city and in larger country towns, protection was provided by manually operated swing gates ("active protection"). The swing gates closed across the railway when the road was open and across the road when a train was approaching. In other areas crossings were "open", protected only by warning signs ("passive protection"). There are still a few manual swing gates in some New South Wales country towns on the more lightly used railway lines.

As traffic densities (in particular road traffic) increased, it became obvious that the manual swing gate installation was causing unacceptable delays because of the time taken to open or close the four individual gates.

The earliest method of speeding up gate operation was to retain the swing gates but operate the gates by chain or wire from an adjacent signal box. This involved the addition of a warning indication to road traffic, which usually took the form of a steady red light, that the gates were about to close.

Further development led to the introduction of boom gates that closed off the full width of the road. Two or four boom gates were used, depending on the width of the road, and were operated by chain drive from the signal box or by electric motor, air motor or hydraulics switched from the adjacent signal box.

It had become obvious that there was a need for active crossing protection at crossings which were remote from signal boxes and where the cost of maintaining a gatekeeper in attendance 24 hours a day was prohibitive. The ready availability of the track circuit by this time had provided a means of detecting the approach of a train and starting the operation of a warning device.

The first warning device used was the "wig wag" signal where a hanging illuminated disk swung in and out behind a shield to produce a flashing light effect. This was followed by the "revolving arm" signal where a revolving dumbbell shaped arm rotated in front of a red light to produce a flashing effect. These were followed by the now standard horizontally mounted pair of flashing lights commonly known as "Type F" level crossing lights.

The need for the added protection provided by gates became obvious at the busier level crossings across two or more tracks in areas remote from signal boxes and this led to the introduction of the "half-arm" boom gate which closed off only the approach side of the road. Full booms in this situation presented a high risk of trapping a vehicle on the level crossing and there was no way of providing adequate warning to the train driver that a vehicle was trapped.

1.1 Scope of this manual

This manual covers only the maintenance and installation of the various types of Type F flashing lights and Type F flashing light and (half) boom barrier installations.

The few manual gates remaining in New South Wales and the earlier types of boom gates or warning devices are not covered in this manual.

1.2 Referenced documents

The following documents are referenced in this manual:

SDG 001 Standard Signalling Circuits

ESG 100.18 Signalling Design Principles – Level Crossings

TMG J036 Level Crossings

SPG 0708 Small Buildings and Location Cases

SPG 0706 Installation of Trackside Equipment

SPG 0723 Manufacture and Assembly of Level Crossing Equipment

SPG 0724 Level Crossing Protection Equipment – Installation

TMG E1261 Cerberus Level Crossing Monitor Field Equipment Manual

AS 1742.7 (Australian Standard) Manual of uniform traffic control devices Part 7: Railway crossings

2 Description of equipment

2.1 Road approach signs

The road signs used on the approaches to and at level crossings are specified in Australian Standard 1742 Part 7.

Prior to 1993 there was little difference in the approach signage between actively and passively protected level crossings, although the signage at the crossing was significantly different.

In 1993 significant differences in the approach signage were introduced to advise the motorist that active or passive protection was provided at the crossing.

Diagrams below show the various types of signs and their application.

RX1 assembly is used at level crossings controlled by “GIVE WAY” signs.

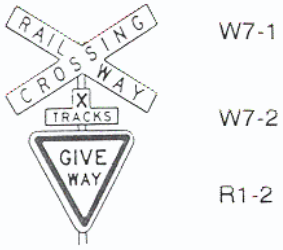

RX-1

Where increased contrast with the background behind the sign is required, the alternative W7-6 sign with the crossbuck on an integral red background may be used.

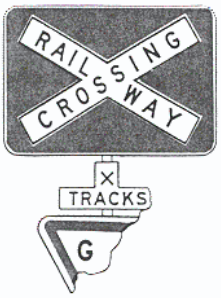

W7-6

Figure 2.1.1 - The RX-1 assembly.

The RX2 assembly is used at level crossings controlled by “STOP” signs.

Where increased contrast with the background behind the sign is required, the alternative W7-6 sign with the crossbuck on an integral red background may be used.

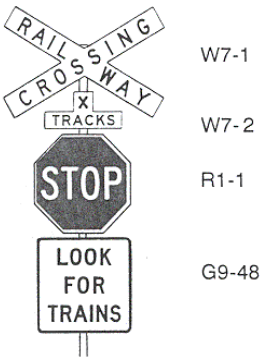

RX-2

Figure 2.1.2 - The RX-2 assembly.

W7-7(L) sign is used to give advance warning of a level crossing protected by “GIVE WAY” or “STOP” signs.

W7-7(L)

W7-7(R) sign is used to give advance warning of a level crossing protected by “GIVE WAY” or “STOP” signs.

W7-7(R)

Figure 2.1.3 - The W7-7(L) and W7-7(R) signs.

W7-8 sign is used to indicate a 90° angle at which the road and railway intersect for a straight road approach.

W7-9 sign is used to indicate the angle at which the road and railway intersect for a straight road approach.

However if the road approach is curved these signs may be used to indicate the direction in which the motorist should look for a train rather than the angle of intersection at the crossing itself

W7-8

G9-48

RX-3-1

W7-9(L)

G9-48

RX-3-2

Figure 2.1.4 - The W7-8 and W7-9 signs.

The RX-7 assembly is used at crossings fitted with Type F flashing lights (whether or not booms are fitted)

W7-1

W7-2

R6-9

RX-5

Figure 2.1.5 - The RX-7 assembly

The W7-4 is used to give advance warning of a level crossing controlled by Type F flashing lights.

Figure 2.1.6 The W7-4.

2.2 Early warning signals

Around 1995 provision was made for the application of early warning lights for the motorist where the approach to an actively protected level crossing was such that the earliest sighting of the Type F signals at the crossing only provided marginal reaction and braking time given the road speed limit in the area.

These early warning lights, which usually take the form of a pair of flashing orange lights, are maintained by the Road Authority (Roads and Traffic Authority or local council, as applicable) and are activated by a signal from the level crossing control equipment when the Type F lights commence to flash.

As the early warning signals are maintained by the Road Authority they are not covered in this manual.

2.3 Type F flashing lights

The basic Type F flashing light assembly consists of a pair of red lights supported on a horizontal crossarm at approximately 760 mm centres. See figure 2.3.1. The lights are generally 200 mm (8”) diameter although some small numbers of 300 mm (12”) lights have been used. Flash rate is 40-45 flashes per minute

Most commonly two pairs of lights are mounted back-to-back on a single post to form a four light assembly. A typical simple level crossing installation, shown in figure 6.1.2, consists of two four light assemblies, one either side of the level crossing.

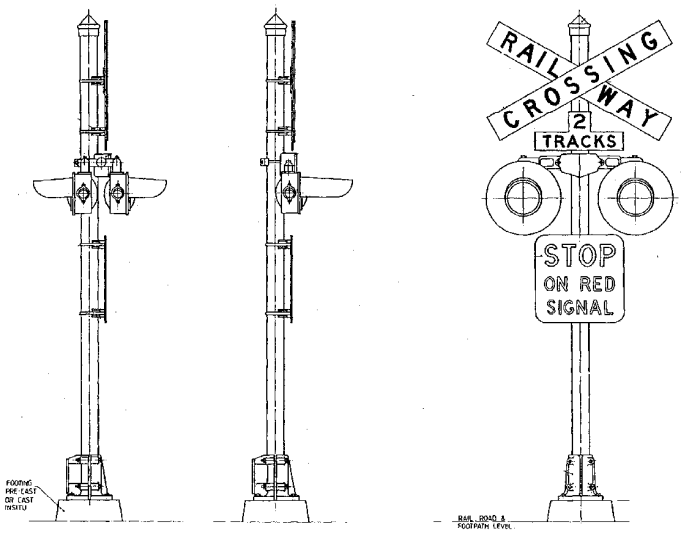

Figure 2.3.1 – Two-light and four-light Type F assemblies

Each light unit was, until 1999, made up of a cast aluminium lampcase, silvered glass or polished metallic reflector, red moulded acrylic or polycarbonate roundel and a 10 V 25 W single filament precision incandescent lamp.

From 1999 LED level crossing light units have been progressively introduced. These consist of up to 150 ultra-bright red LEDs mounted into a printed circuit board which fits within the cast aluminium case. The LEDs are covered by a clear polycarbonate cover which may or may not contain moulded lenses to concentrate or spread the light beam from each LED.

Type F light units used in New South Wales have included Westinghouse HC81, Westinghouse HC100, Western Cullen Hayes 970-201, Western Cullen Hayes 975-201 (300 mm only).

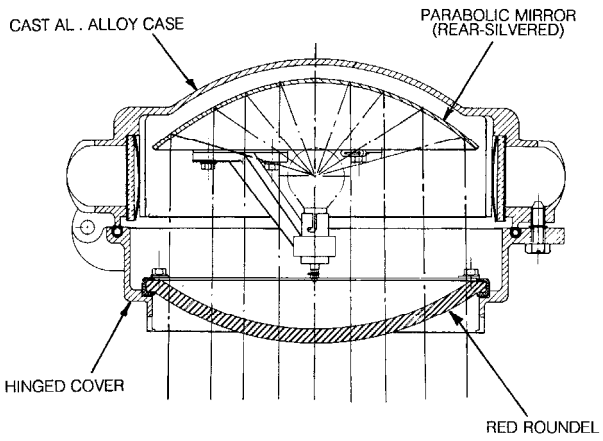

Figure 2.3.3 – Type F light unit with incandescent lamp

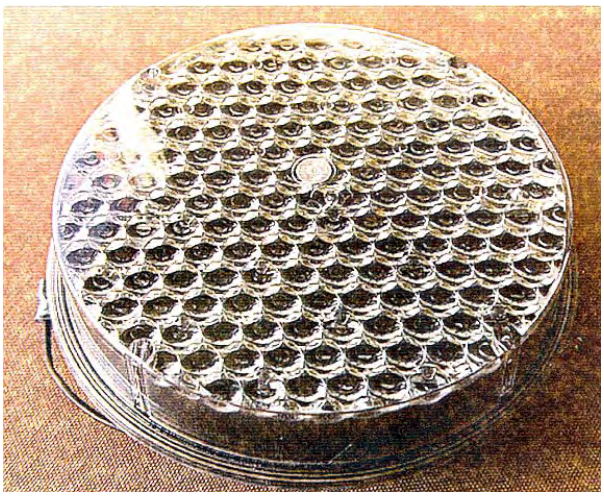

Figure 2.3.4 – LED conversion unit for Type F light unit

2.4 Bells

Level crossings fitted with Type F signals are normally provided with one bell while those fitted with Type F lights and booms are provided with two bells, one each side of the crossing.

The bell provides an additional audible warning to the visual warning provided by the Type F lights, although the audible warning range for road vehicles1 is limited to the proximity of the level crossing.

Bells are 300 mm diameter electromagnetically operated with a ringing rate of 150-200 strikes per minute. Soft tone (nylon) hammers have been provided in some locations close to residences, hotels or motels to reduce the sound level of the bell. In other locations one of the two bells has been suppressed at night. Following the introduction of volume adjustable sirens on pedestrian level crossings, both bells have been suppressed at night at a small number of locations with the pedestrian siren remaining active to provide an audible warning.

Bells used in New South Wales have been manufactured by Westinghouse and Western Cullen Hayes.

Modern crossings will be fitted with an electronic type bell (i.e. tone generator).

A typical level crossing bell is shown in figure 2.4.1.

An electronic tone generator type crossing bell is shown figure 2.4.2

1 The range of the audible warning is determined by whether a vehicle's windows are open or closed and whether a sound system is being used in the vehicle.

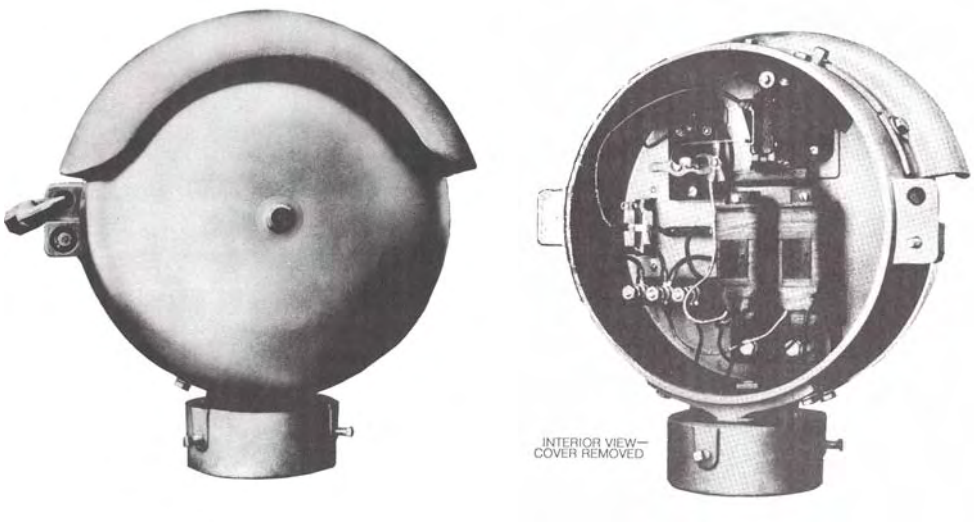

Figure 2.4.1 - Western Cullen Hayes Type 333 Level Crossing Bell

Figure 2.4.2 Electronic Tone Generator Bell

2.5 Road Barrier Mechanisms

While there have been several different types of road barrier mechanisms used in New South Wales since their introduction in 1956, all have the same operating principles and all mount onto a 140mm steel post.

In all cases:

- The mechanism is rated 8 to 20 volts DC
- The electric motor drives the mainshaft (gate arm shaft) through a reduction gear train and, on some mechanisms, through an overload clutch.
- A hold clear device is provided on the motor shaft to retain the barrier in the raised position
- Power down operation is provided between 90° and 50° (or 45°)
- A circuit controller, driven off the main shaft, and motor control relay are provided
- Snubbing is provided over the last 5 or 10° of downward barrier movement.

The following barrier mechanisms have been used in New South Wales

- Western Railroad Supply Co (WRRS)…… Type B
- WRRS …….. Type D
- Western Cullen Hayes…….. Type 3590
- Western Cullen Hayes…….. Type 3593
- Harmon…… Type H1
- Westinghouse…… Type EB

2.5.1 WRRS Type B

The WRRS Type B barrier mechanism was the first of the current type of barrier mechanism introduced into New South Wales. Initial installations were at Wingham, Dunheved and Coniston in 1958.

The mechanism is housed in a cast iron case with a hinge down cast-iron cover. The case is clamped to a 140mm steel post and is supported by a swivel bracket which allows the mechanism and barrier to be rotated through 90° so that repairs can be carried out to the mechanism and barrier without blocking road traffic.

The motor and hold clear mechanisms are enclosed in a single case within the mechanism case. A hinged cover gives access to the hold clear mechanism. The overload clutch is mounted on the motor shaft behind the pinion. The motor in this mechanism is unusual in that it has six field windings, four used to drive up and two to drive down.

Drive is through a reduction gear train to the main shaft which projects both sides of the case to accept the barrier arm support.

The circuit controller is operated by a sector gear driven from a pinion on the second intermediate gear and contains a total of eleven contacts, six of which are required for gate operation.

The motor control relay is used to switch between the drive up and drive down field windings in the motor and also controls the operation of the hold clear coils.

A number of Type B mechanisms were fitted with pedestrian barrier shafts driven by a crank from the main shaft.

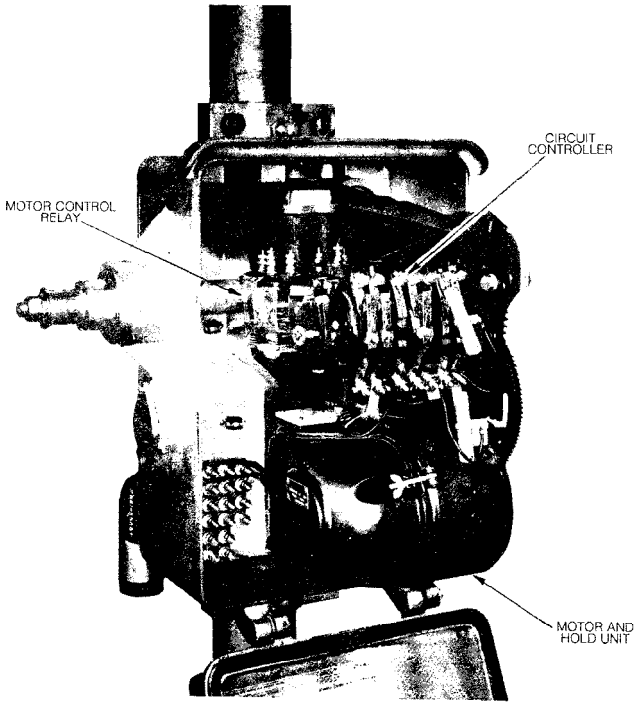

Figure 2.5.1 – WRRS B Type boom mechanism

2.5.2 WRRS Type D

The WRRS Type D mechanism is, essentially, a less complex version of the Type B and was first installed around 1968. Externally it is almost identical to its predecessor but did not include the pedestrian arm shaft.

The major differences from the Type B are:

- The motor has only the usual four field coils which are used to drive up and down
- The circuit controller is directly driven by cams on the main shaft.
- The hold clear mechanism is under a separate cover on the back of the motor.

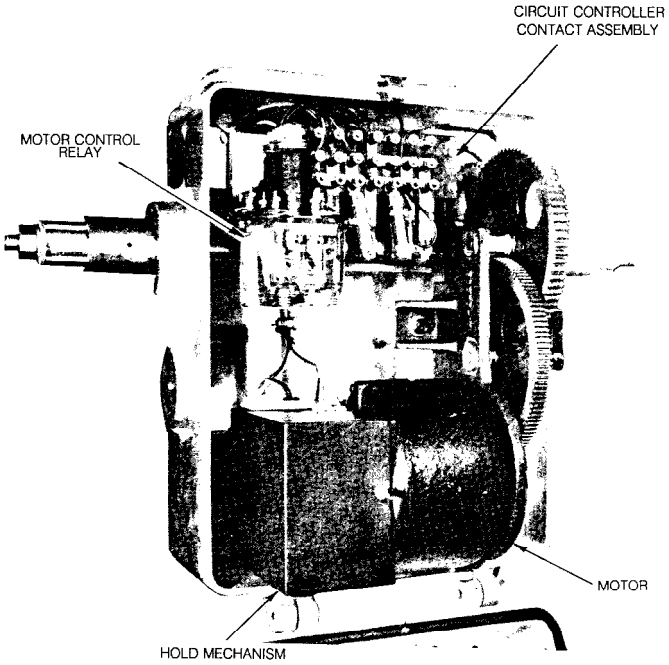

Figure 2.5.2 – WRRS Type D boom mechanism

2.5.3 Western Cullen Hayes Type 3590

Western Cullen Hayes are the successors to Western Railroad Supply Co. The Western Cullen Hayes Type 3590 mechanism was first installed in New south Wales around 1975.

The mechanism functions in the same manner as the WRRS Type D and is mechanically similar. However the case, cover and gate arms are made from cast aluminium, the motor is totally enclosed with pre-lubricated bearings, there is no overload clutch and the circuit controller and motor control relay are mounted in different positions.

The hold clear device, while still of the ratchet and pawl type, is not covered and is of considerably different appearance to the WRRS mechanisms.

2.5.4 Western Cullen Hayes Type 3593

This mechanism is mechanically identical to the Type 3590, however the circuit controller has five cams instead of the seven in the Type 3590 and the motor control relay has four contacts instead of two. Internal circuitry of the mechanism is also different to the Type 3590 and the hold clear mechanism contains a contact controlling power down operation.

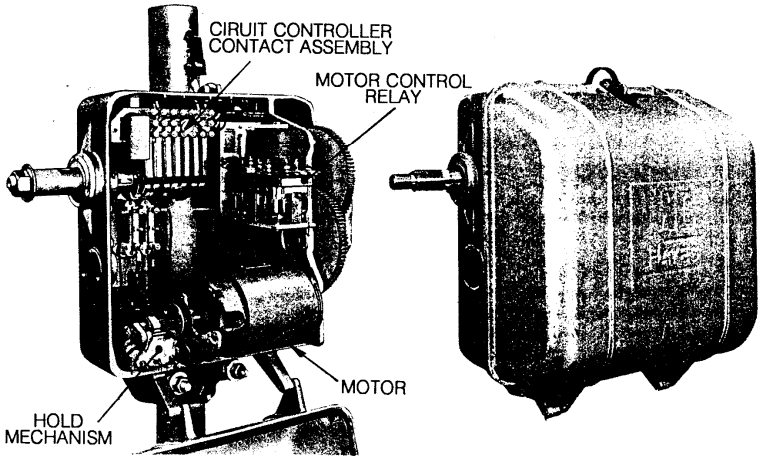

Figure 2.5.4 – Western Cullen Hayes Type 3590/3593 mechanisms

2.5.5 Harmon Type H1

The Harmon Type H1 mechanism, like the Western Cullen Hayes mechanisms, has the case, cover and gate arms manufactured from aluminium and appearance, installation and operation are similar. Again, the motor has no overload clutch but is rated to withstand stalling for extended periods.

The hold clear device is, unlike the other mechanisms, a magnetic brake which, when energised, prevents the motor being rotated in reverse by the gear train.

The circuit controller, like the Western Cullen Hayes 3590/3 mechanisms, is directly driven by cams on the main shaft but has six cams.

An additional vital relay (GCR) is provided as the motor control relay in this mechanism is of a non-vital type.

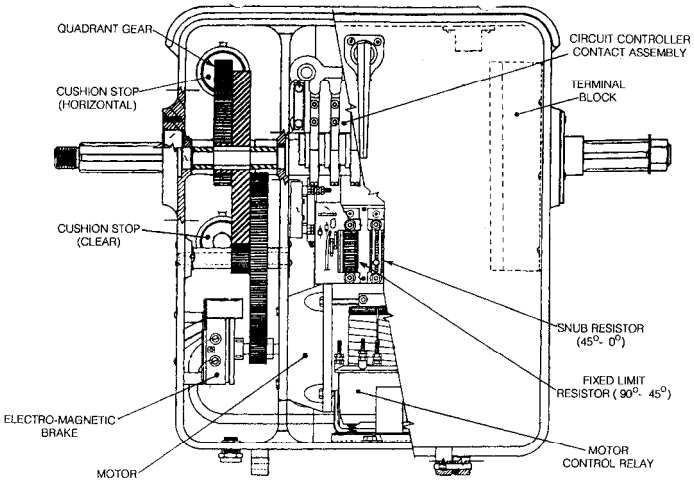

Figure 2.5.5 – Harmon Type H1 mechanism

2.5.6 Westinghouse Type EB

The Westinghouse Type EB Mechanism uses a sheet aluminium case and cover but installation and operation, with ratchet and pawl hold clear mechanism, are similar to the WRRS and Western Cullen Hayes mechanisms.

The major difference with this mechanism is in the circuit controller where enclosed contact assemblies are driven off the main shaft by a cam and link arrangement. Like the Western Cullen Hayes 3593 mechanism, a contact in the hold clear mechanism controls power down operation and a single vital relay controls motor drive up and drive down operation.

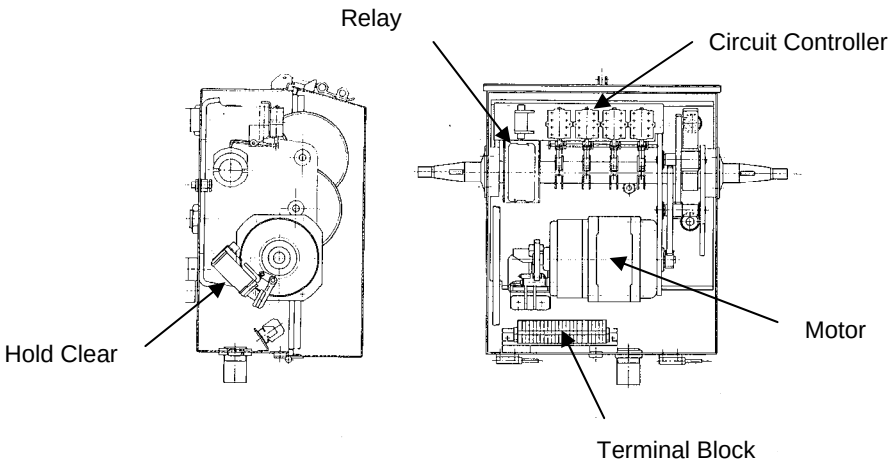

Figure 2.5.6 – Westinghouse Type EB mechanism

2.6 Power supply

With the exception of some pedestrian level crossing, which are supplied from normal and emergency 120v signalling supplies, level crossing protection equipment is powered by nickel cadmium or sealed lead acid batteries arranged in 14 to 16.8 volt banks according to the requirements of the installation.

The batteries are maintained in the fully charged condition with permanently connected 120 or 240 volt battery chargers supplied from RAC mains and/or from local electricity supply company mains where no RAC supply exists.

The minimum battery capacity for a basic level crossing with Type F lights (no boom barriers or pedestrian facilities) is 140 ampere-hour.

2.7 Flashers

Until about 1997, flashers were Westinghouse PTF2, PTF3 and PTF3b mounted in a large plug-in relay case. These flashers, although very reliable, were able to fail in such a way that all the Type F lights controlled by the flasher would be extinguished. (Two flashers were used on each crossing, each controlling the lights on one side of the crossing.)

To overcome this problem Westinghouse developed the “Safeflash” unit, designed to maintain steady lights if failure occurs, to replace the PTF series.

2.8 Level Crossing Monitor

The description, installation, maintenance and testing of level crossing monitors is contained in manual TMG E1261.

3 Principles of operation

3.1 Level crossing protection

The track plan and circuits for a typical single line level crossing are shown in the X001 and X003 pages of the circuit design standard SDG 001.

The lengths of approach tracks UX and DX are designed so that the Type F lights and bells will commence operating 25 seconds before the train reaches the crossing if it is travelling at maximum line speed. (In most installations prior to about 1993, the minimum warning time was 20 seconds. This was increased to 25 seconds to provide for longer road vehicles such as B-doubles).

A train approaching the level crossing will drop the approach track (UX or DX) which, in turn, drops the crossing control relay(s) (XR, XPR) which activate the flashers and the lights and bell.

The crossing control relays will remain de-energised and the lights and bell continue to operate until the train has cleared the crossing track (XT).

If booms are installed on a single line crossing, the approach warning time is increased to 30 seconds. Lights and bells commence to operate when the approach track drops with the booms beginning to descend 11 seconds later. These times were increased in 1993 from 25 seconds and 7 seconds respectively to provide for longer road vehicles.

For a double line level crossing, where booms are always installed, the circuits are also shown in the X006, X007, X020 and X121 pages of the circuit design standard SDG 001.

Principles of operation are the same as for the single line crossing except that, since trains run in one direction only on each track, there is no need for the direction stick circuits. An additional feature of the double line crossing is the presence of the holding tracks DXH and UXH.

A down train that has passed over the crossing and just cleared DX track would normally permit the booms to lift and lights and bells to cease operating. However if an up train drops UXH track within 15 seconds of the down train clearing DX track, the crossing control relay will remain de-energised and the booms will remain down and lights and bells continue to operate. This prevents the situation where the booms could lift and begin to drop again immediately onto a vehicle that had begun to move over the crossing.

3.2 Boom barrier mechanisms

Even though there are internal component differences, the principle of operation of all boom barrier mechanisms in use in New South Wales is the same.

An 8 Vdc to 20 Vdc series wound motor drives a double ended main (or gate arm) shaft through a reduction gearbox. A circuit controller is driven either directly or indirectly from the main shaft and a hold clear mechanism operates on the motor shaft. Drive is applied from 0° to 87° or 88° in the upward direction and from 90° to 50° or 45° in the downward direction. The motor is snubbed (i.e. loaded when acting as a generator) between 5° and 0° to brake the barrier descent.

Control of the mechanism may be 4 wire (control +, control -, motor +, motor -) or 3 wire (control +, motor +, common -).

The motor control relay within the mechanism is activated by the control circuit. The motor supply runs through a contact (or contacts) of the motor control relay and through the 0° to 87° (or 88°) contact on the circuit controller to drive the barrier up. Concurrently, the pick-up and hold clear coils of the hold clear device are energised and the motor rotates against the ratchet of the hold clear (except Harmon H1 mechanisms, where the magnetic brake is not activated until the barrier reaches 88º).

When the barrier reaches 87° or 88°, power to the motor (and in some cases the motor control relay) and pick-up coil of the hold clear mechanism is cut off, but is retained to the hold clear coil or magnetic brake that holds the barrier in the up position.

To lower the gate, the motor control relay is de-energised. This de-energises the hold clear coil and reverses the drive on the motor so that it drives the barrier down from 90° to 45° where the drive ceases and the barrier drops under gravity. At 5° a snubbing resistor is brought into circuit to act as a brake to slow the barrier descent.

In those mechanisms where the motor control relay is de-energised while the gate is in the raised position, the hold clear coil is switched directly by the gate control relay and a contact in the hold clear mechanism controls the drive down function.

4 Operational and functional checks

4.1 Intervals

Operational and functional checks are to be carried out at the intervals specified in the Signalling Technical Maintenance Plan SC 00 51 00 00 MP and associated service schedules SC 00 51 00 00 SS or at the intervals specified in the approved Tailored Technical Maintenance Plan for the line or region concerned.

4.2 Type F flashing lights (all types)

4.2.1 Voltage at lamps

Check the operating voltage on the lamps using a multimeter with minimum/maximum hold capabilities and with the flasher unit in circuit. The voltage at the lamp should be 9.4 V to 9.7 V. If the voltage is outside this range, adjust the dropping resistor. This check should be made at the light, if this is possible without removing the lamp. Where not possible, the check is to be made at the terminals in the crossarm.

Note: This check is not required with LED level crossing lights as these will accept 8 V to 24 V (at least) without change in intensity. Where LEDs light units are used the dropping resistor is not required and, if installed, must be bridged.

4.2.2 Lamp alignment

Check the alignment of the lights. This should be generally in accordance with figures 6.1.1.1, 6.1.1.2 and 6.1.1.3 shown in Section 6 – Installation.

If incandescent lights appear to be consistently dull, irrespective of the position of the observer, then either:

- The vertical alignment of the lights is incorrect,
- The lamp voltage is incorrect,

- The reflector is tarnished, or
- The roundel is dirty or damaged.

If LED lights appear to be consistently dull, then either:

- There is severe vertical misalignment of the light unit,
- The polycarbonate cover is dirty or damaged, or
- Voltage at the light unit is less than 8 volts

4.2.3 Flash rate

Check the flash rate. This should be approximately 48 flashes per minute and each light of a pair should be illuminated for approximately the same length of time. If the flash is inconsistent the flasher unit will need to be changed.

4.2.4 Roundels, covers and fasteners

Check that roundels are undamaged, that lights are securely fastened to the crossarm and that front covers are properly closed.

If a damaged roundel is found, replace at the earliest possible opportunity. If the damage is sufficient to cause that light unit to display either a white light or little or no light, replace the same day.

4.3 Bells

4.3.1 External

From a distance of about 30 metres from the bell, check the sound level. The bell should be able to be clearly heard, even above the noise from the passage of a train. If the beat of the bell is noticeably irregular, adjust the contact spacing. Note that level crossing bells rarely have a perfectly even beat. Only a bell which has a seriously uneven beat needs adjustment, or if this does not cure the problem, replacement.

4.3.2 Internal

Check that all components are secure and all bolts, nuts, fasteners are tight.

4.4 Road boom barriers

4.4.1 All types

4.4.1.1 Boom lights

Check the operating voltage on the lamps using a multimeter with minimum/maximum hold capabilities and with the flasher unit in circuit. This check should be made at the terminal box on the boom and the voltage at this point should be 9.4 V to 9.7 V. If the voltage is low, but the voltage at the corresponding Type F lights is correct, it will be necessary to examine the wiring between the terminal box and the post base and the condition of the contact in the mechanism to determine where the problem lies.

Check visibility at a distance of 100 metres of the flashing boom lights and the steady tip light.

If incandescent boom lights are not visible at 100 metres, then either

- The voltage at the lamp is below 9.4 volts,
- The lamp lenses are dirty or damaged
- The shield has been bent and is partly obscuring the light
- The light is misaligned, if it is of the double sided type

If LED boom lights are not visible at 100 metres, then either:

- The light is badly misaligned
- The voltage at the LED unit is low
- The polycarbonate cover is dirty or damaged.

4.4.1.2 Reflective treatment

Check that all reflective strips are present and clean.

4.4.2 Timber Booms

Check the integrity of the boom barrier assembly, the condition of the timber and fastening to the gate arm support. All bolts and fastenings must be tight and there should be no splits in tip or side boards. Replace damaged tips or side boards as necessary

Tip replacement can be carried out without removing the boom from the mechanism. For side board renewal the boom should be replaced and repaired off site.

A temporary repair to a split tip or side board can be effected using a bandit clamp or similar or soft wire binding around the timber.

4.4.3 Aluminium / GRP and GRP booms

Check the security of the fastenings between the aluminium and fibreglass sections and, on longer booms, between fibreglass sections.

Check the fibreglass sections for signs of delamination.

Check the break-away coupling between the boom and the gate arm support for wear or damage.

4.5 Road boom mechanisms (all types)

4.5.1.1 Hold clear device

Observe the operation of the hold clear device when the boom drives to the vertical position. If of the ratchet and pawl type, the pawl should engage cleanly and should not slip past any ratchet teeth when the motor stops driving. If the pawl does slip past any teeth, then either:

- The pawl and/or ratchet are worn and must be replaced
- The holding coil is not retaining the armature securely (may be due to foreign matter between armature and coil increasing the air gap, low voltage on the coil, defective coil)

Similarly the magnetic brake on the Harmon H1 mechanism should engage as soon as the motor stops driving and there should be little or no slip back.

If there is slip back, then the magnetic brake is worn and must be replaced.

On the mechanisms with ratchet and pawl hold clear devices, check the condition of the teeth on the ratchet for wear or burrs, check that the edges of the pawl are sharp. (Note

that on Western Cullen mechanisms, the pawl is reversible if one side is worn). Replace either or both ratchet and pawl if there is obvious wear.

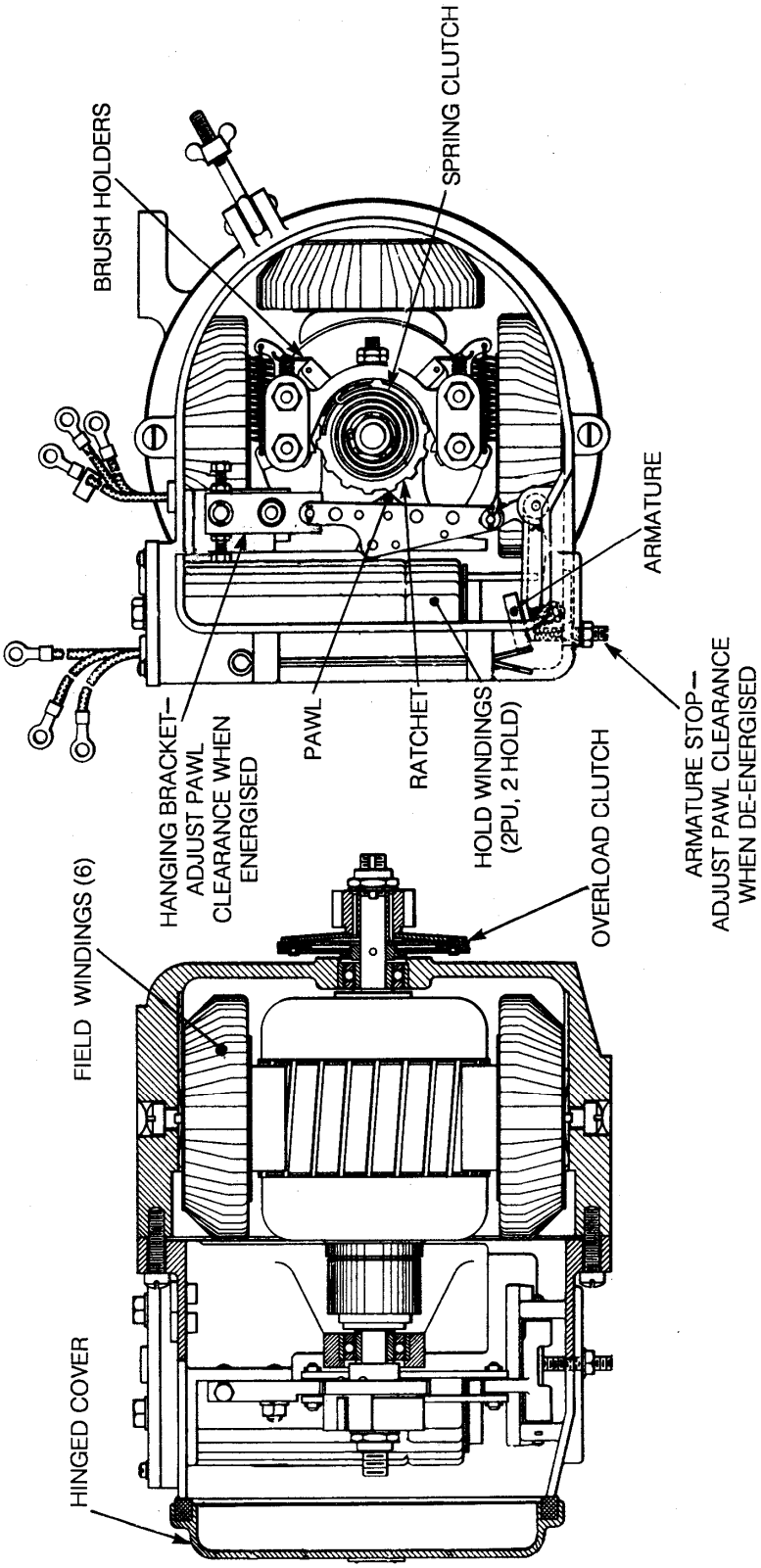

Figure 4.5.1 - WRRS B and D Type mechanisms – motor and hold-clear

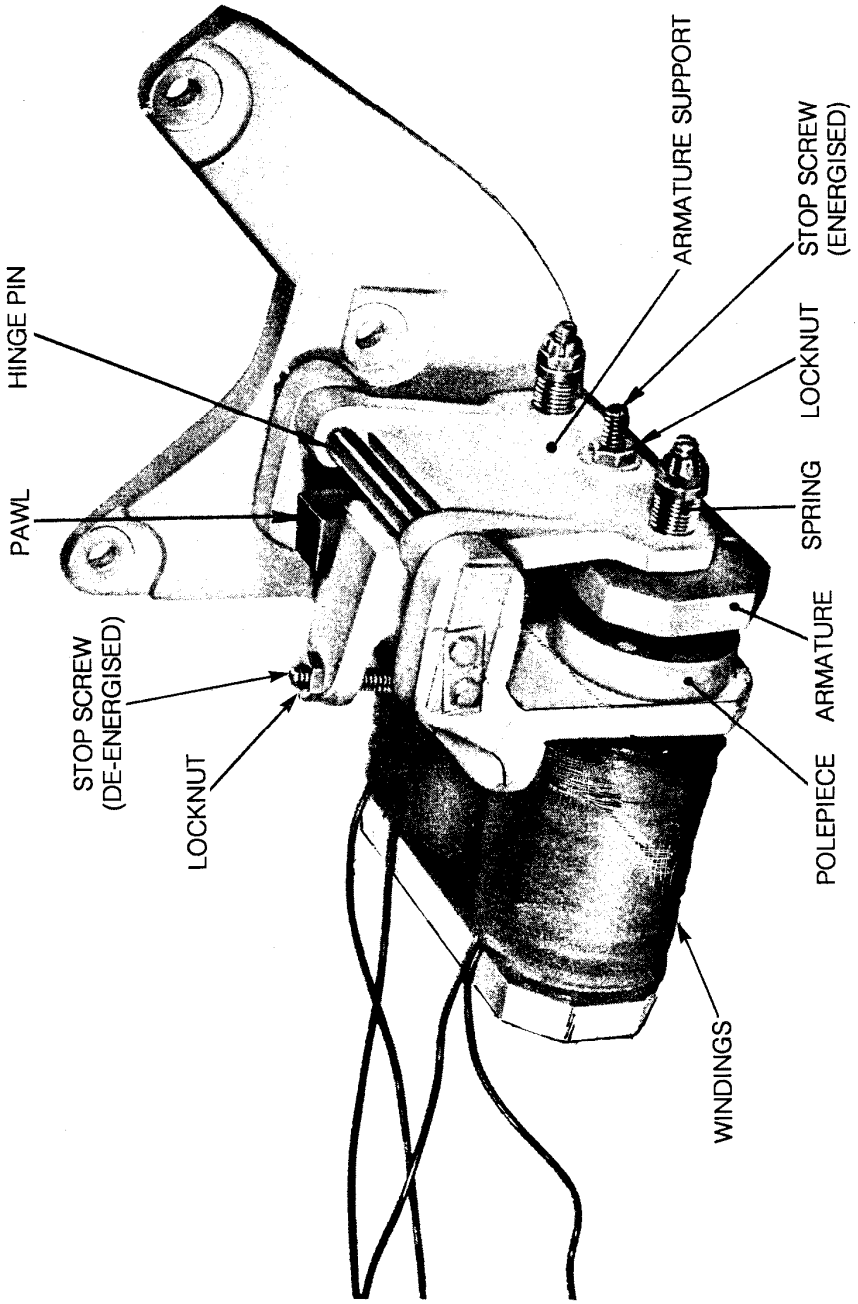

Figure 4.5.2 - Western Cullen Hayes mechanisms – hold-clear assembly

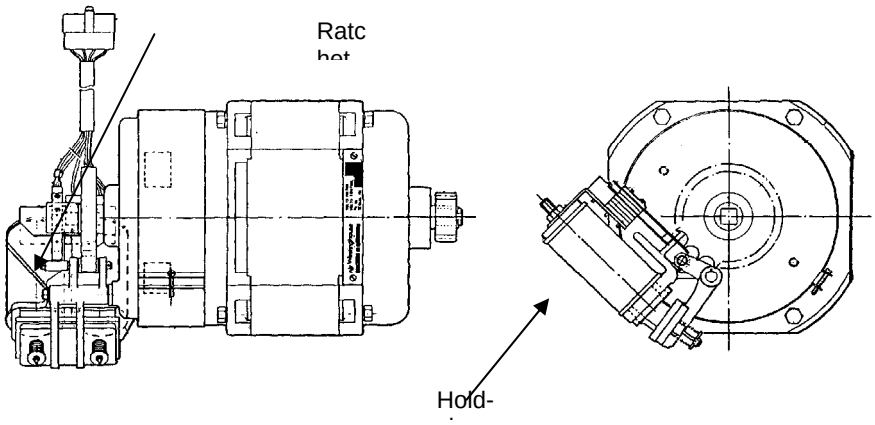

Figure 4.5.3 - Westinghouse EB – Motor and Hold-clear

Check the clearance between the pawl and the root of the ratchet teeth in the energised position. This should be not more than 0.25 mm for WRRS and Western Cullen Hayes mechanisms

In WRRS mechanisms this clearance is adjusted by re-positioning the hanging bracket (figure 4.5.1), in Western Cullen mechanisms by adjusting the stop screw in the armature casting between the spring loaded armature studs (figure 4.5.2).

Check the clearance between the pawl and the ratchet in the de-energised position. This should be 0.25 mm to 0.5 mm.

In WRRS mechanisms this clearance is controlled by the stop screw which passes through the base of the motor casting. In Western Cullen mechanisms, adjustment is made by the stop screw on the top of the armature support casting.

For Westinghouse EB mechanisms, energised and de-energised clearances are not adjustable.

For Harmon H1 mechanisms check the clearance between the brake facings when de-energised. This should be 0.75 mm or greater. Replace the brake if the clearance is less than 0.75 mm.

4.5.1.2 Boom angle

Check that the boom is not driven past 90° but is driven to at least 88° (86° for Westinghouse EB). Use a protractor on the underside of the boom arm if required

Adjust the motor cut-out contacts if necessary

Mechanism	Contact Number
WRRS Type B	2 – 4
WRRS Type D	1B – 1C
Western Cullen Hayes Type 3590	1B – 1C
Western Cullen Hayes Type 3593	4B – 4C

Harmon Type H1	1B – 1C
Westinghouse Type EB	3-1 / 3-2

4.5.1.3 Speed of operation

Check the time taken for the mechanism to drive the boom up to the clear position. This should be 6 seconds to 8 seconds and must never be more than 10 seconds.

If the clearing time is between 8 seconds and 10 seconds, correction should be carried out at the earliest convenient time. If the clearance time exceeds 10 seconds, correction must be carried out immediately.

If the time is greater than 8 seconds, then either

- The voltage at the motor is too low, ie. < 10 volts
- The motor is defective
- The gear train / main shaft are defective or lack lubrication, or
- The boom is not properly counterweighted.

If the voltage at the motor is too low,

a) check the battery and battery charger no load voltages. Nickel Cadmium battery no load voltage with charger off should be at least 14.4volts. Battery charger float voltage should be 17.5 volts.

b) Check the battery loaded voltage with charger off. This should be not less than 12.5 volts. If it is, either the battery is not fully charged or one or more cells is defective and must be replaced.

Note: There will be a very high current drawn by the mechanism motors at start. This is likely to drag the battery voltage below 10 V for 250 to 500 milliseconds. This reading, if seen, should be ignored.

If the battery voltage is correct but the motor voltage is low, there is high resistance in the circuit between battery and motor. This must be traced and corrected.

If the gear train or main shaft are defective or there is a problem with lubrication, it is very likely that the boom will be slow to drop as well as slow to lift.

If no fault is found with power supply, motor or gear train then it is probable that the boom is not properly counterweighted. Carry out the horizontal and vertical torque adjustment tests as described in section 6 of this manual.

Check the boom descent time. This should be between 12 and 15 seconds and must not exceed 16 seconds.

If the descent time is too fast, it is probable that the boom is not correctly counterweighted. (This would usually be accompanied by too slow a lift)

If the descent time is too slow, then either

- The gear-train and/or main shaft are defective (again probably accompanied by slow lift), or
- The boom is not correctly counterweighted. (This may be accompanied by a very quick lift)

4.6 Power supply

4.6.1 Batteries

4.6.1.1 For a level crossing not fitted with a level crossing monitor

Switch the battery charger off and measure the battery cell voltage after the crossing load has been applied for two minutes. Under these conditions nickel cadmium cells should not measure less than 1.25 V and lead acid cells not less than 2.0 V. For unsealed lead acid cells also check the specific gravity of the electrolyte with a hydrometer. This should read about 1.25 for a fully charged cell.

Check the electrolyte level and top up with de-mineralised water if necessary. Do not over fill.

4.6.1.2 For a level crossing fitted with a level crossing monitor

Check the electrolyte level and top up with de-mineralised water if necessary. Do not over fill.

4.6.2 Battery charger

4.6.2.1 For a level crossing not fitted with a level crossing monitor

Check the battery charger float voltage. This should be:

- For nickel cadmium cells
  - 10 cell 14.5 volts
  - 12 cell 17.5 volts
- Lead Acid
  - 6 cell (2 x 6 volt batteries) 14.1 volts

Adjust if necessary at potentiometer RV1 on the charger. Note that the float voltage should be set when the charge rate has fallen below 1 Amp.

Low voltage alarm card setting should be:

- For nickel cadmium cells
  - 10 cell 11.8 volts
  - 12 cell 14.16 volts
- Lead Acid
  - 6 cell (2 x 6 volt batteries) 11.4 volts

If it is suspected that the settings are incorrect, use the adjustment procedure described below to check the settings.

To adjust the alarm card settings:

a) Turn the charger off but do not disconnect from the battery

b) Connect the meter to the sockets provided on the alarm card. The meter should show the battery voltage.

c) Change switch SW1 from “Normal” to “Adjust”. The red LED will illuminate and the meter will now read the alarm voltage. If necessary adjust the “Reference Set” potentiometer RV2 to the required alarm level listed above.

d) Ensure that the alarm relay RL1 is energised. If it is not, turn the “Alarm Set” potentiometer RV1 fully anti-clockwise and push the reset button PB1 to energise the relay.

e) Adjust RV1 until the relay just drops out.

f) Return switch SW1 to the “Normal” position and ensure that the relay energises when the re-set pushbutton is pressed. Remove the meter leads and switch on the charger. Ensure that the green LED is illuminated.

4.6.2.2 For a level crossing fitted with a level crossing monitor

No battery charger tests are required.

4.7 Level crossing monitor

Checks to be carried out to the level crossing monitoring system are detailed in the Level Crossing Monitor Manual TMG E1261.

4.8 Train detection

Checks to be carried out on track circuits or on other methods of train detection are detailed in Manual TMG J036 Signalling Maintenance Procedures and in the equipment manual for the particular type of train detection system in use.

5 On-site maintenance

5.1 Recommended tools

The following tools and materials should be carried by maintenance personnel required to carry out routine on-site maintenance of level crossing equipment.

- Multimeter with minimum/maximum capability
- ¼” Whitworth nut driver
- 2BA nut driver
- 200 mm insulated combination pliers
- 200 mm longnose insulated pliers
- Screwdrivers 250 x 6, 250 x 5, 150 x 3.
- Adjustable wrenches 300 mm and 200 mm
- Small oilcan with SAE 30 or 20W-40 or 20W-50 oil
- Molybond GA10 grease or equivalent and 25mm brush
- Grease gun with Lithium based multi-purpose grease
- CRC2-26 Cleaner/lubricant or equivalent pressure pack
- Soft brush (about 40 mm)
- Water with a small amount of mild detergent added (alternatively a liquid cleaner suitable for acrylic plastics)
- 10 V 25 W SBC single contact lamps
- Range of fuses.

5.2 Type F lights

Clean the outside surface of each roundel by first dusting off with a soft brush then washing with water with a small amount of mild detergent added. Dry after washing. Alternatively wash and polish with proprietary cleaner suitable for acrylic plastics.

Open the lampcase front cover and similarly clean the inside surface of the roundel if necessary.

Examine the reflector and brush off any dust on the surface. A tarnished or dull reflector must be replaced.

If dust or other foreign matter has been found inside the lampcase, the cover and cover seal must be examined. Ensure the seal is in good condition and is seated properly and that the cover is closing evenly all around the case. Replace the seal if suspect.

Replace any lamps which have blackened envelopes.

Close and clamp covers tightly. Check that the lampcases cannot be moved on the cross-arms and that the crossarms cannot be moved on the post. If any movement is possible, without slackening bolts, the lights must be refocused as described in Section 6 of this manual, then fastenings tightened.

5.3 Bells

Remove the gong on Westinghouse bells or the rear cover on Western Cullen Hayes Bells and clean the inside of the bell. If spider webs and/or wasps nests are a problem, the inside of the gong or cover may be sprayed with a surface insect spray. Do not spray the mechanism.

Lubricate the striker mechanism by applying a few drops of SAE 20 or 30 oil to the mechanism bearings.

5.4 Road boom barriers

5.4.1 All types

Clean the lenses of the boom lights

Clean the reflective strips on the boom – replace if reflectivity is moderately or severely degraded.

5.4.2 Timber booms

Replace or recondition on an “as required” basis.

Reconditioning may vary from simply re-painting to replacement of timber side panels and tips. With the exception of tip replacement, reconditioning should be carried out off-site. Care should be exercised to ensure that reconditioning cost does not exceed renewal cost.

5.4.3 GRP and aluminium/GRP booms

Replace or recondition on an “as required” basis

5.5 Boom gate mechanisms

5.5.1 All types

Clean the circuit controller contacts with 400 or 500 grit emery or wet and dry paper. Replace any badly burnt or pitted contacts.

After cleaning, check the contact tension and adjustment. Refer to individual mechanism types for contact tension settings and adjustment methods.

Lubricate the mechanism where and with the lubricants shown on the lubrication diagrams for each type of mechanism.

WRRS B type ……Figure 5.5.1.1

WRRS D type……Figure 5.5.1.2

Western Cullen Hayes 3590 or 3593…….Figure 5.5.1.3

Harmon H1……Figure 5.5.1.4

Westinghouse EB ……Figure 5.5.1.5

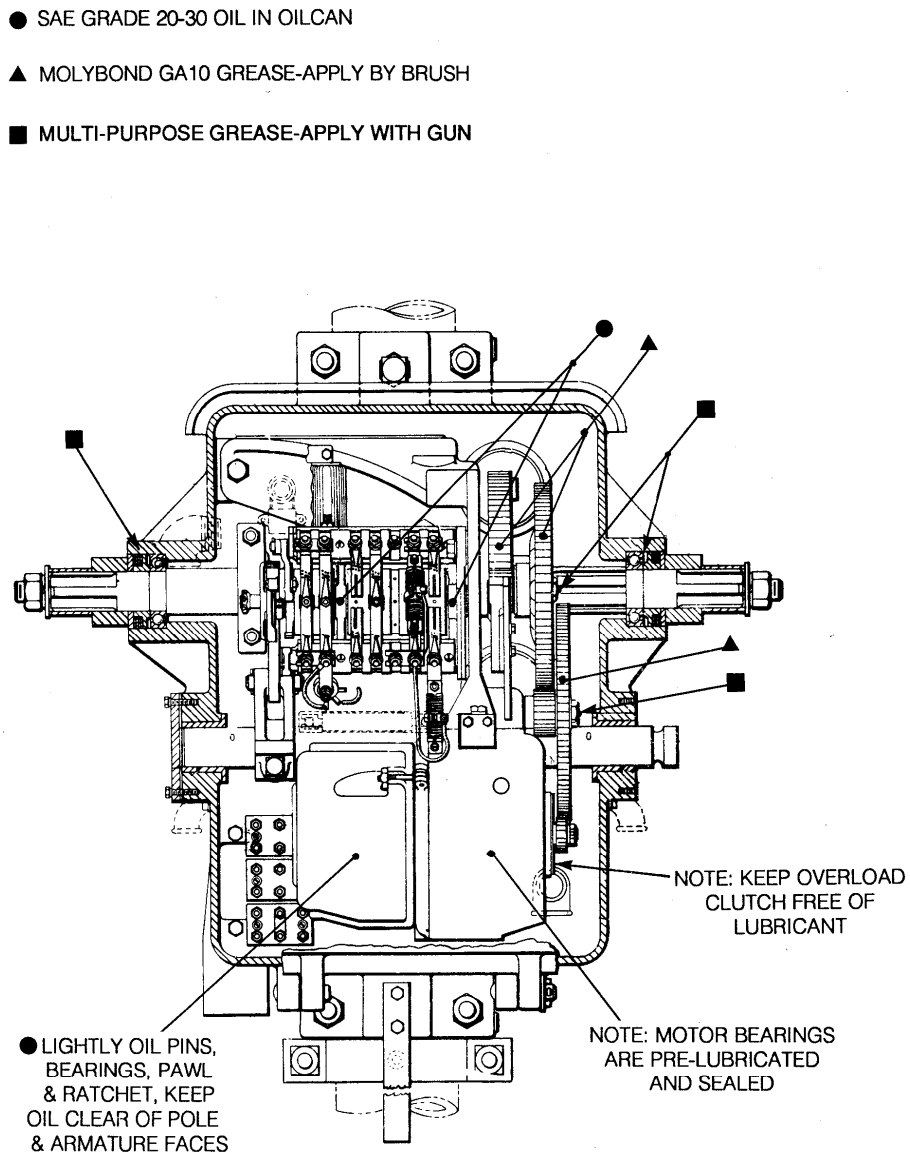

Figure 5.5.1.1 - WRRS Type B mechanism lubrication

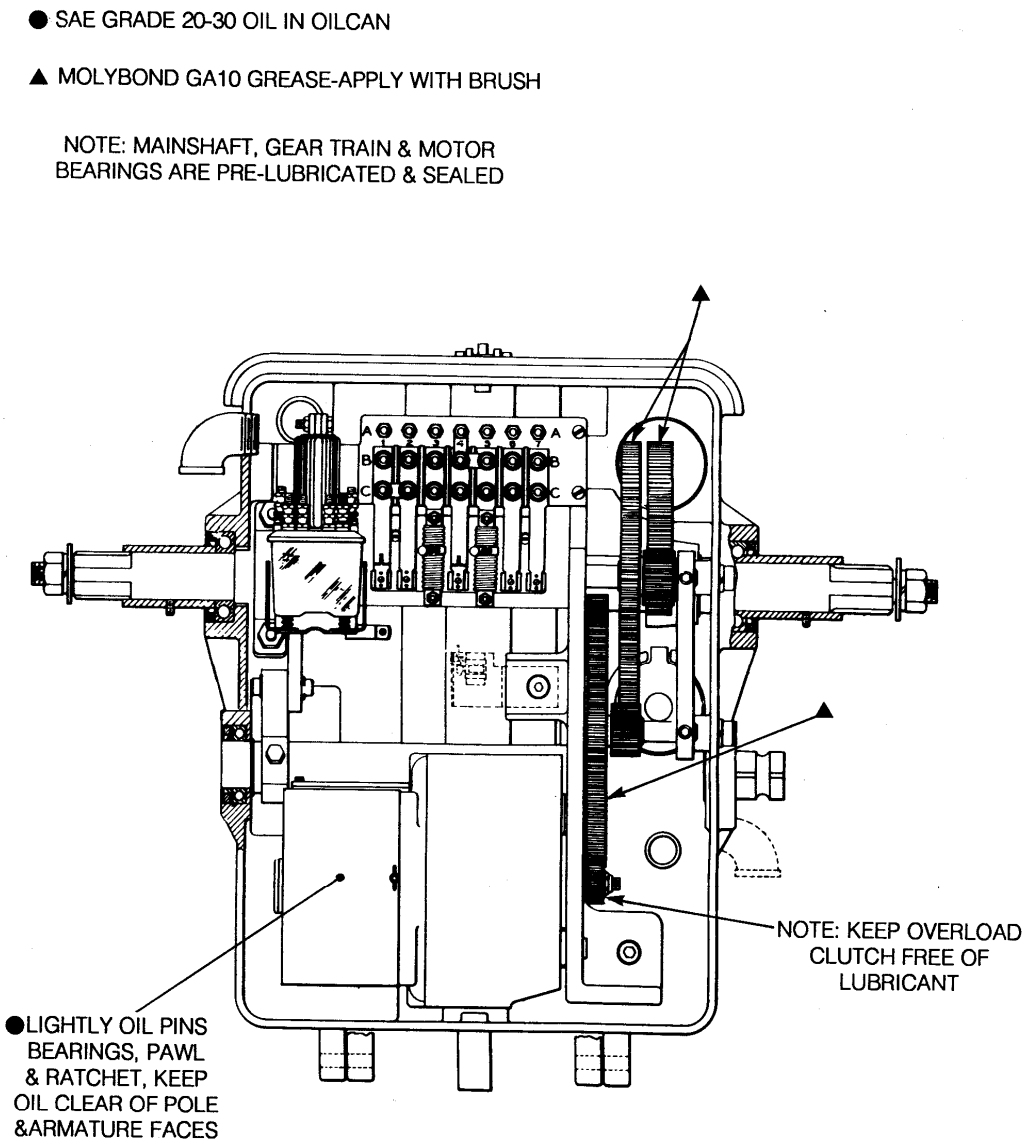

Figure 5.5.1.2 - WRRS Type D mechanism lubrication

● SAE GRADE 20 - 30 OIL IN CAN

▲ MOLYBOND GA10 GREASE-APPLY WITH BRUSH

NOTE: MAINSHAFT, GEAR TRAIN & MOTOR
BEARINGS ARE PRE-LUBRICATED & SEALED

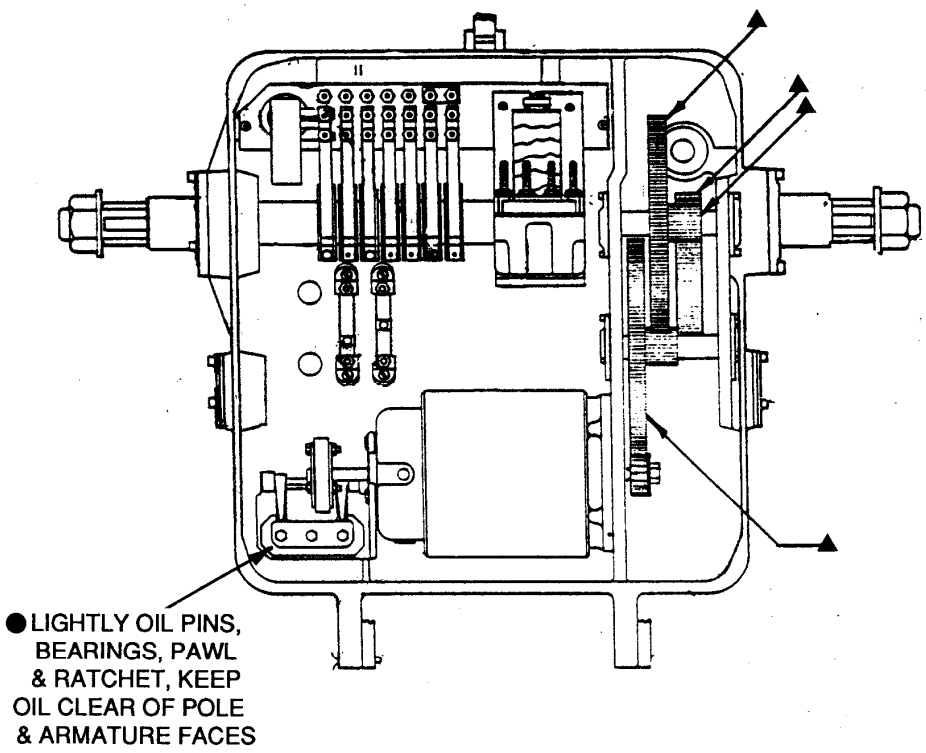

Figure 5.5.1.3 - Western Cullen 3590 / 3593 mechanisms lubrication

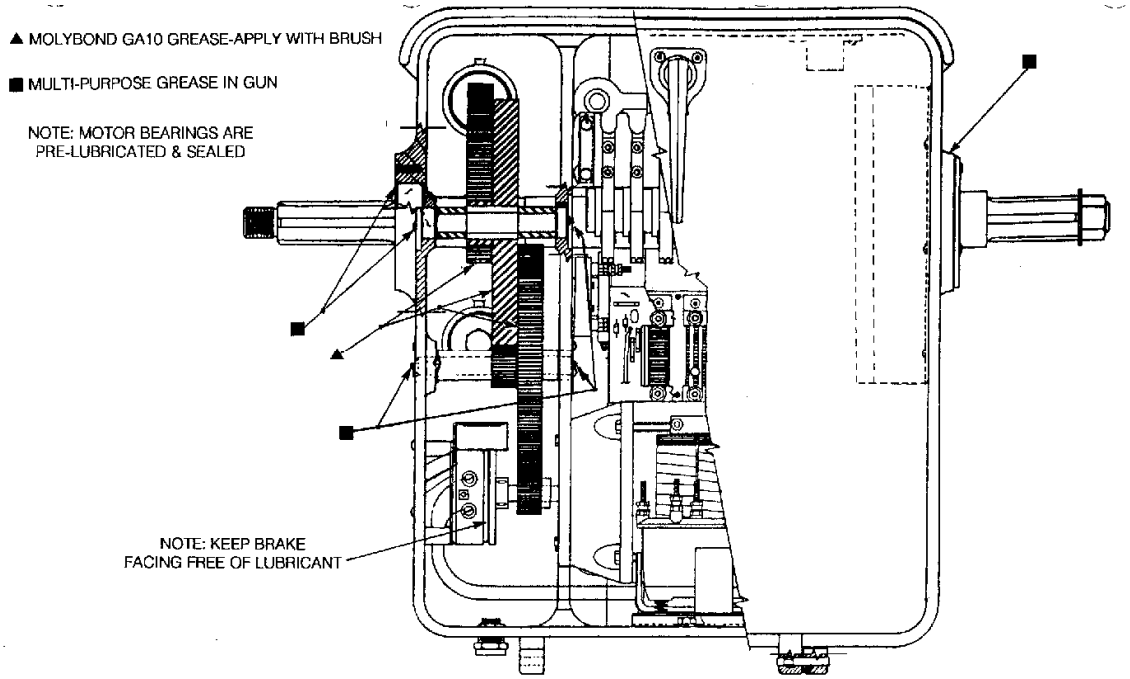

Figure 5.5.1. - Harmon H1 mechanism lubrication

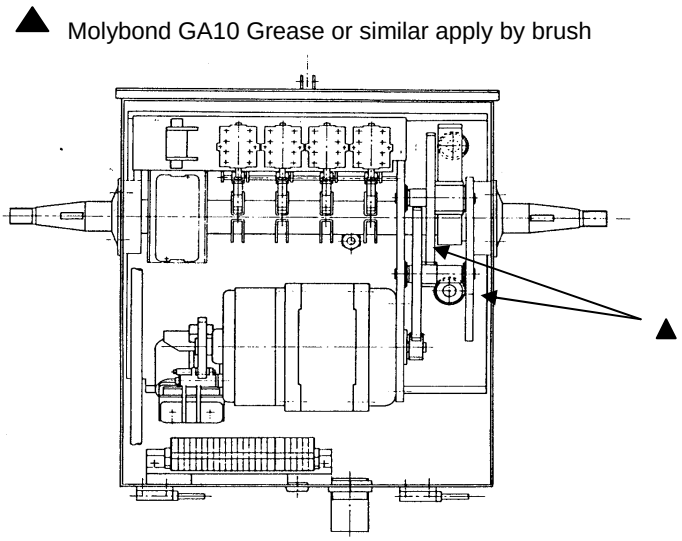

Figure 5.5.1.5 - Westinghouse EB mechanism lubrication

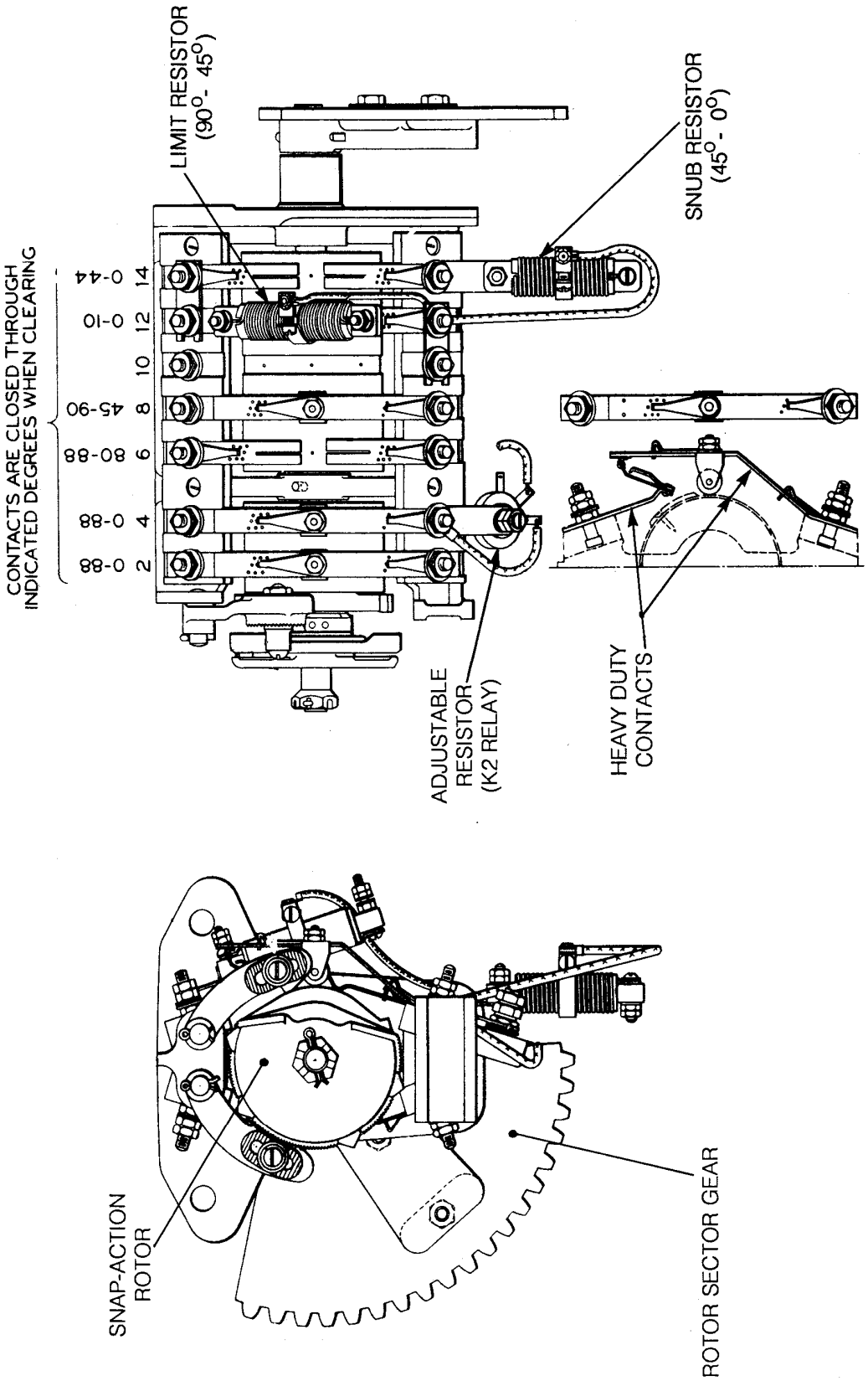

Figure 5.5.2.1 - WRRS B Type mechanism – circuit controller

5.5.2 WRRS B Type mechanism

5.5.2.1 Circuit controller adjustment and settings

There are two types of contacts in the Type B mechanism circuit controller. Those which wipe directly on the drum segments which are known as “drag” contacts and those actuated by rollers in contact with the drum segments. The latter type are heavy duty and in the case of those controlling the motor and control relay, are ‘snap’ action. Circuit controller construction is shown in figure 5.5.2.1

To adjust the angular operating point of a “drag” contact, loosen its terminal nuts and reposition the slotted contact finger. Be sure to relocate the spigot of the locking finger in a convenient hole before re-tightening the terminal nuts.

The contact pressure for a drag contact should be 340 grams to 450 grams. The contact surface of a drag contact should not rub on the surface of the drum between segments. These contacts may be sparingly lubricated with CRC2-26 cleaner/lubricant or equivalent

To adjust a heavy duty contact, re-position the roller bearing bracket on the slotted contact finger by loosening the locknuts which fix it to the finger. The spigot of the locking finger must be relocated in a convenient hole before tightening the lock nuts.

The pressure exerted by the roller operated contact on the fixed contact should be between 400 grams and 560 grams. When open the moving contact should be at least 3.0 mm clear of the fixed contact. When closed the fixed contact should be displaced from its keeper by approximately 1mm.

5.5.2.2 Motor

Motor maintenance is limited to examination/replacement of brushes and commutator cleaning.

Brushes should be replaced when there is obvious heavy arcing between brush and commutator or when the distance between the commutator and the nearest point on the brush holder has decreased to 6 mm.

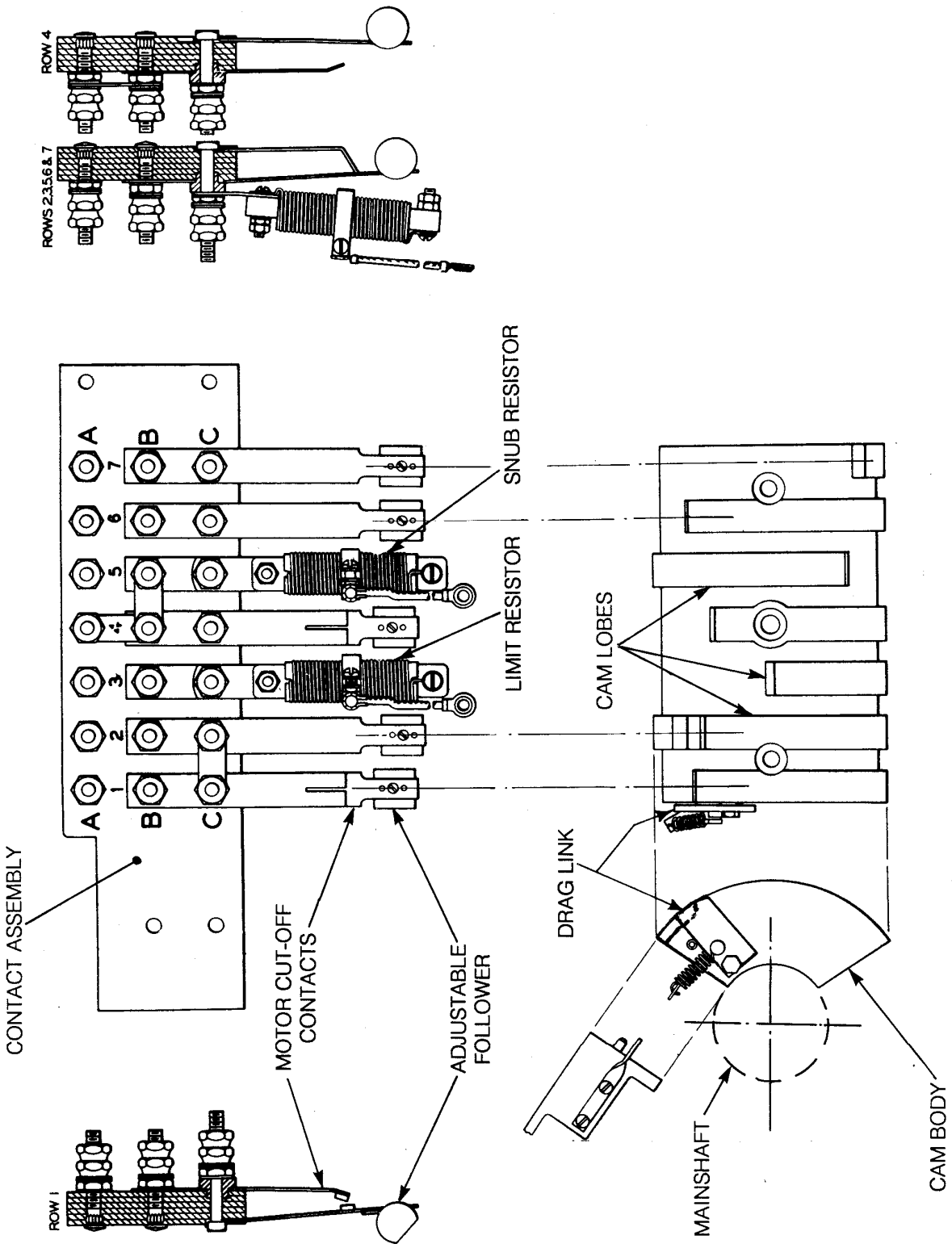

Figure 5.5.3.1 - WRRS D Type mechanism – circuit controller

WARNING

Do not remove the brushes from the motor while the boom is vertical unless the boom has been tied back to the post.

If the hold mechanism is de-energised and there are no brushes in the motor, the boom will fall at high speed due to the complete absence of braking.

WARNING

If the boom is tied up or swung away from the road, the level crossing must be protected in accordance with the appropriate Network Rule.

To gain access to the brushes, open and remove the cover of the hold clear mechanism. Observe motor operation and examine the colour of the commutator. If it is an even bronze or coffee colour on the brush track no cleaning is necessary.

If there are blackened areas, indicating heavy arcing, unclip and remove the brushes. Clean the commutator with 500 grade or 600 grade wet and dry paper. Ensure that all traces of grit and dust are removed.

Fit new brushes (never renew one brush only) and bed in by rocking 400 grade wet and dry paper between the brush and commutator. Remove all dust and grit.

5.5.3 WRRS Type D mechanism

5.5.3.1 Circuit controller adjustment and settings

The WRRS Type D circuit controller has pairs of flat contact springs which are actuated by cams on the main shaft. Each moving contact finger is provided with a moulded follower which rides on the cam surface.

The cams are not adjustable on the main shaft but the contact which controls the motor cut-off in the vertical position is fitted with an adjustable follower. By loosening the follower and moving it upward, the boom angle is reduced and by moving it downward, the boom angle is increased.

The only other available adjustments on Type D circuit controllers are the contact openings. These are:

- No 1 contact……...1.8 to 2.0 mm
- No 2 contact……...1.2 to 1.4 mm
- Nos 3 to 7 contacts…….1.3 to 1.8 mm

Note that the motor cut-off contact, No 1, is given a snap action by a drag link which supports the contact follower until it drops over the edge of the link. At this point the link snaps clear allowing the contacts to open quickly. When the cam is driven in the opposite direction, boom descending, the link is pushed clear until the follower reaches the main cam surface. The contacts then close, but only after the boom has dropped about 10º, which prevents “jazzing” if there is momentary power loss to the hold clear mechanism.

5.5.3.2 Motor

Motor maintenance is as described in clause 5.5.2.2 for WRRS B Type mechanisms

5.5.4 Western Cullen Hayes Type 3590 and 3593 mechanisms

5.5.4.1 Circuit controller adjustments and settings

The Western Cullen Hayes circuit controller is similar to the WRRS Type D except that the cams are adjustable on the main shaft.

Normally, the only cam which should need adjustment is No1 which operates the motor cut-off, although any cam may be adjusted by slackening the cap screws and rotating the cam on the shaft.

When tightening the cams be sure to maintain the 1.5 mm clearance shown in figure 5.5.4.1 between the cap screw and the cam insert.

The cam inserts in cams 2 to 7 are fixed. The insert in cam 1 is free to move about 5mm radially to provide a fast opening action to the contact by sliding away from the follower when it reaches the end of the insert surface.

Contact pressures should be 390 grams to 680 grams when closed and when open there should be a gap of 1.5 mm between the cam follower and cam surface.

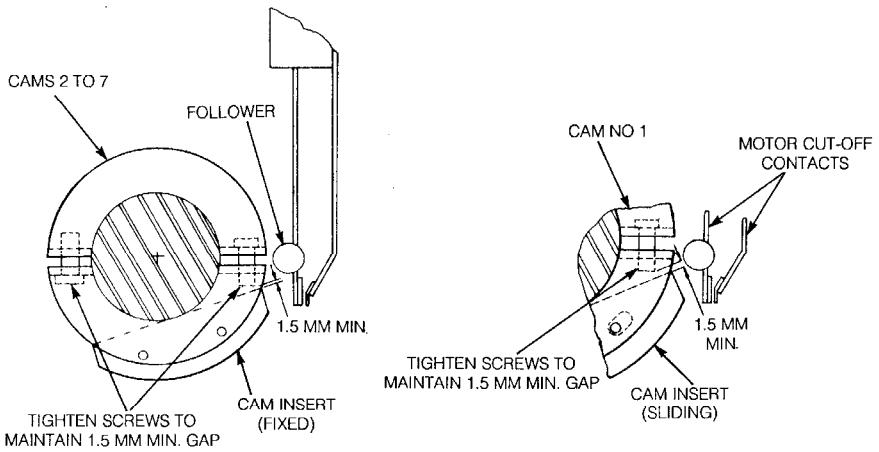

Figure 5.5.4.1 - Western Cullen Hayes circuit controller

5.5.4.2 Motor

Only the brushes can be serviced in Western Cullen Hayes Motors. The commutator is not accessible unless the motor is stripped down and this is not to be attempted in the field. If commutator attention is required, the motor must be forwarded for overhaul.

To remove the brushes unscrew the threaded caps and remove each brush complete with its spring. Measure the brush length. If the carbon portion is 16 mm or less, the brush must be replaced. Slightly hollow the commutator face of the new brushes if this has not already been done.

WARNING

Do not remove the brushes from the motor while the boom is vertical unless the boom has been tied back to the post.

If the hold mechanism is de-energised and there are no brushes in the motor, the boom will fall at high speed due to the complete absence of braking

WARNING

If the boom is tied up or swung away from the road, the level crossing must be protected in accordance with the appropriate Network Rule

Insert the brushes and refit and tighten the caps. Do not replace one brush, always replace as a pair.

5.5.5 Harmon H1 mechanism

5.5.5.1 Circuit Controller adjustment and settings

The Harmon Type H1 circuit controller is similar to the Western Cullen Hayes with adjustable cams. Again No. 1 cam should be the only one requiring adjustment, but all can be adjusted if necessary.

Adjustment is carried out by slackening the Allen head screws and rotating the cam, upwards to increase angle and downwards to reduce it.

Contact pressures when closed should be 340 grams to 450 grams and when open the gap between contacts should be at least 1.5 mm. In addition, when the contacts are open the followers (rollers) of the moving contact should rest lightly on the cam surface.

5.5.5.2 Motor

The Harmon Type H1 motor has four brushes spaced at 90º around the commutator.

To gain access to the brushes and commutator, remove the circular cover from the end of the motor housing opposite the drive pinion.

Brushes are retained in rectangular guides by threaded caps and springs. If the remaining spring travels is less than 2 mm (best determined as the cap is being unscrewed – if the spring is not obviously bearing against the cap after it has been unscrewed 2 mm then remaining travel is at the limit), all brushes must be replaced.

WARNING

Do not remove the brushes from the motor while the boom is vertical unless the boom has been tied back to the post.

If the hold mechanism is de-energised and there are no brushes in the motor, the boom will fall at high speed due to the complete absence of braking

WARNING

If the boom is tied up or swung away from the road, the level crossing must be protected in accordance with the appropriate Network Rule

Bed in new brushes by rocking 400 grade wet and dry paper between the brush and commutator. Remove all traces of grit and dust.

The commutator should appear to be a polished bronze or coffee colour and, if so, no further action is necessary. If there are blackened areas, indicating arcing, the commutator should be cleaned with 500 or 600 grade wet and dry paper. Remove all traces of grit and dust.

5.5.6 Westinghouse EB mechanism

5.5.6.1 Circuit controller adjustment and settings

The contacts in the Westinghouse EB mechanism are semi-sealed and cannot be cleaned or adjusted. If there is any problem with any contact assembly, then that assembly must be replaced.

The cams which drive the linkages to the contacts are, however, adjustable by slackening the clamp screws and rotating the cam on the shaft. It should not normally be necessary to adjust cams in the field.

5.5.6.2 Power down contact

With the armature of the hold clear mechanism closed (hold clear engaged) and power down contact open, the gap between contact springs should be 2.5 mm to 2.8 mm. Set the lower contact spring to obtain this setting

With the armature released and power down contact closed, contact pressure should be 80 grams to 100 grams. Set the upper contact to obtain this pressure.

5.5.6.3 Motor

The commutator on these motors is not accessible and no field maintenance is possible.

Brushes may be removed and checked by removing the brush holder covers, detaching the pigtail from the brush terminal and lifting the brush spring. The brush must not be less than 16 mm long.

WARNING

Do not remove the brushes from the motor while the boom is vertical unless the boom has been tied back to the post.

If the hold mechanism is de-energised and there are no brushes in the motor, the boom will fall at high speed due to the complete absence of braking

WARNING

If the boom is tied up or swung away from the road, the level crossing must be protected in accordance with the appropriate Network Rule

New brushes should be slightly hollowed on the face contacting the commutator (this may have been done during manufacture) before installing.

Ensure that the brush moves freely in the guide and the spring is seating properly on the bush. Terminate the pigtail and refit the brush covers.

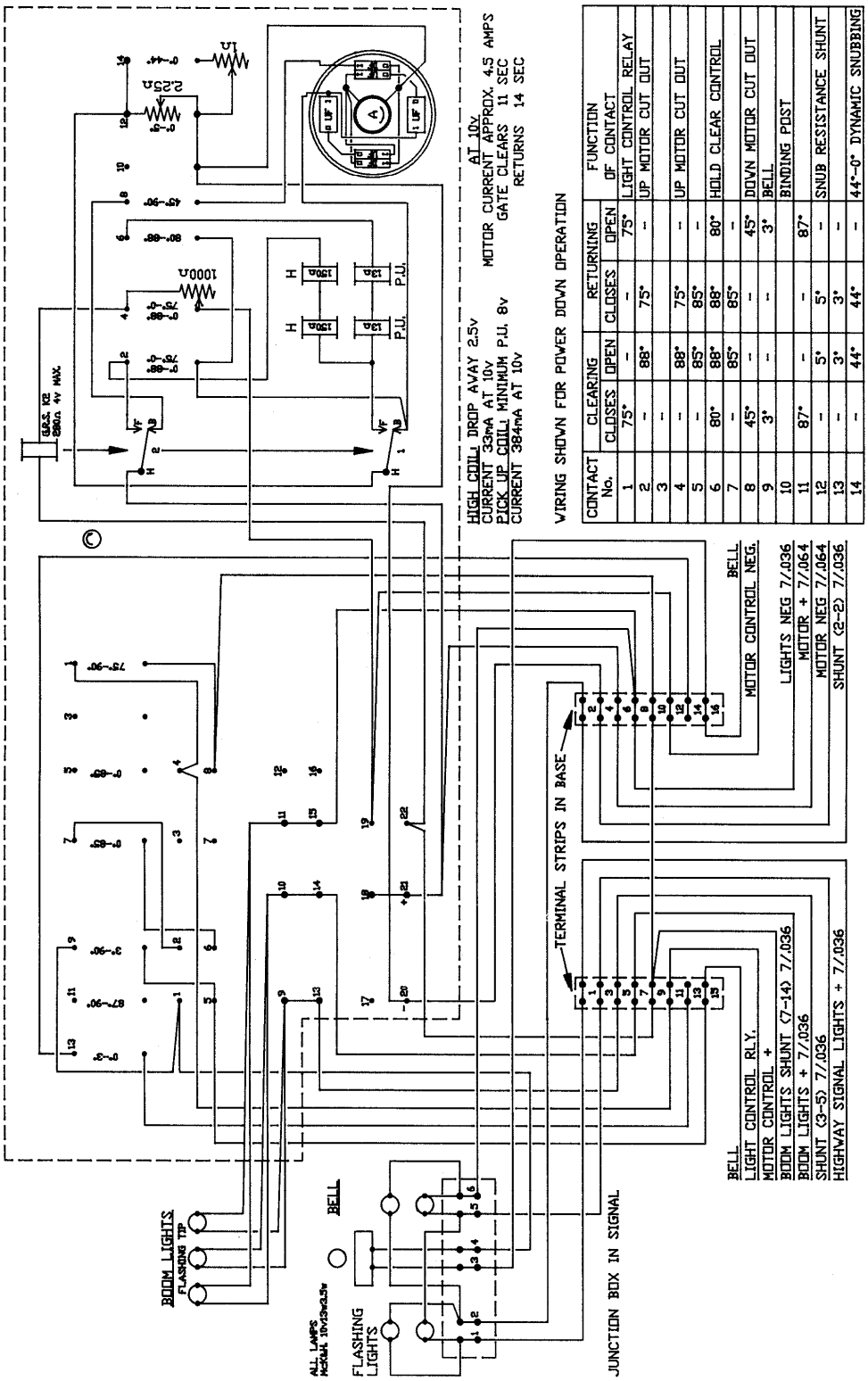

Figure 5.5.2 - WRRS B Type mechanism circuit

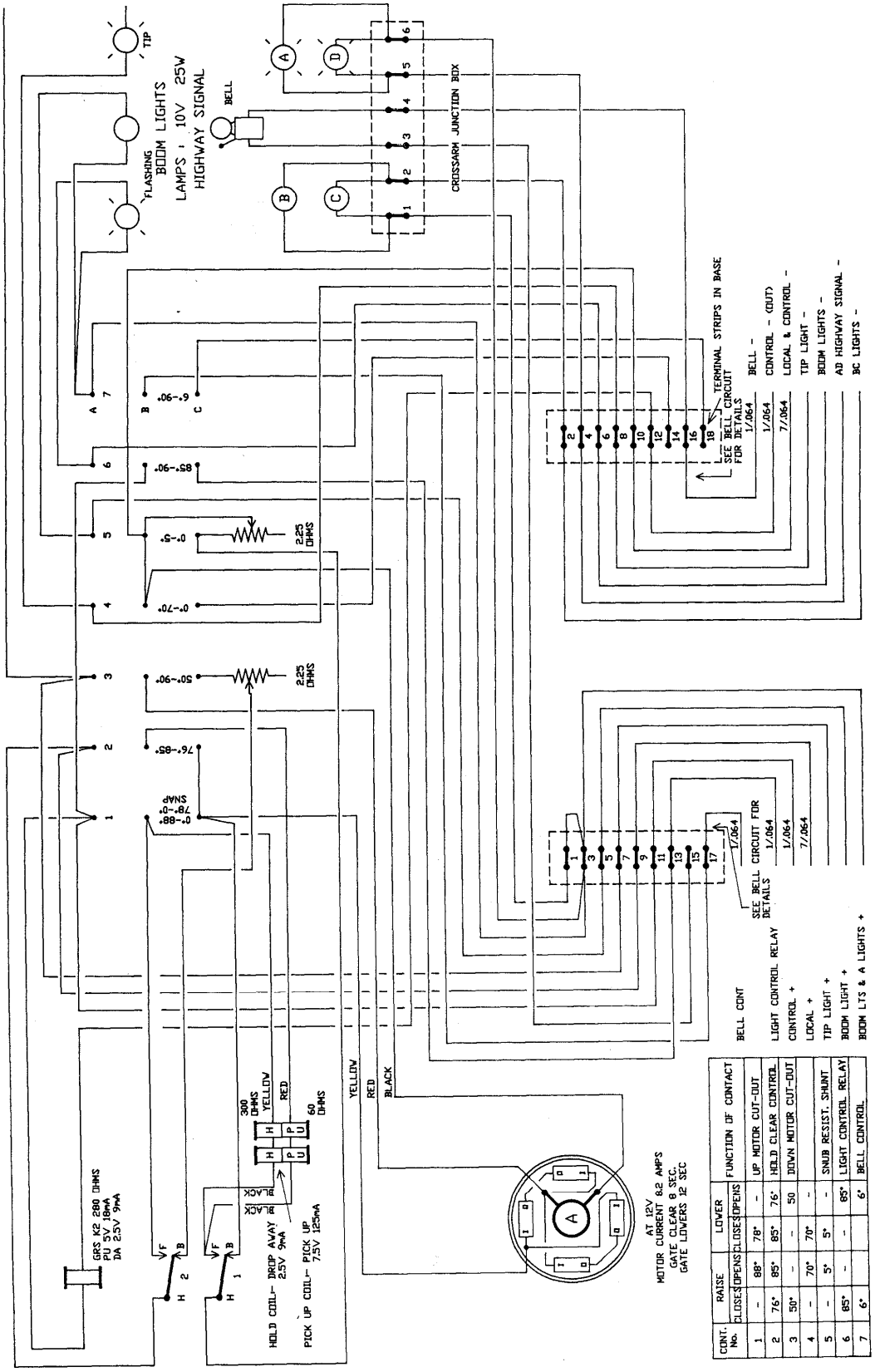

Figure 5.5.3 - WRRS D Type mechanism circuit

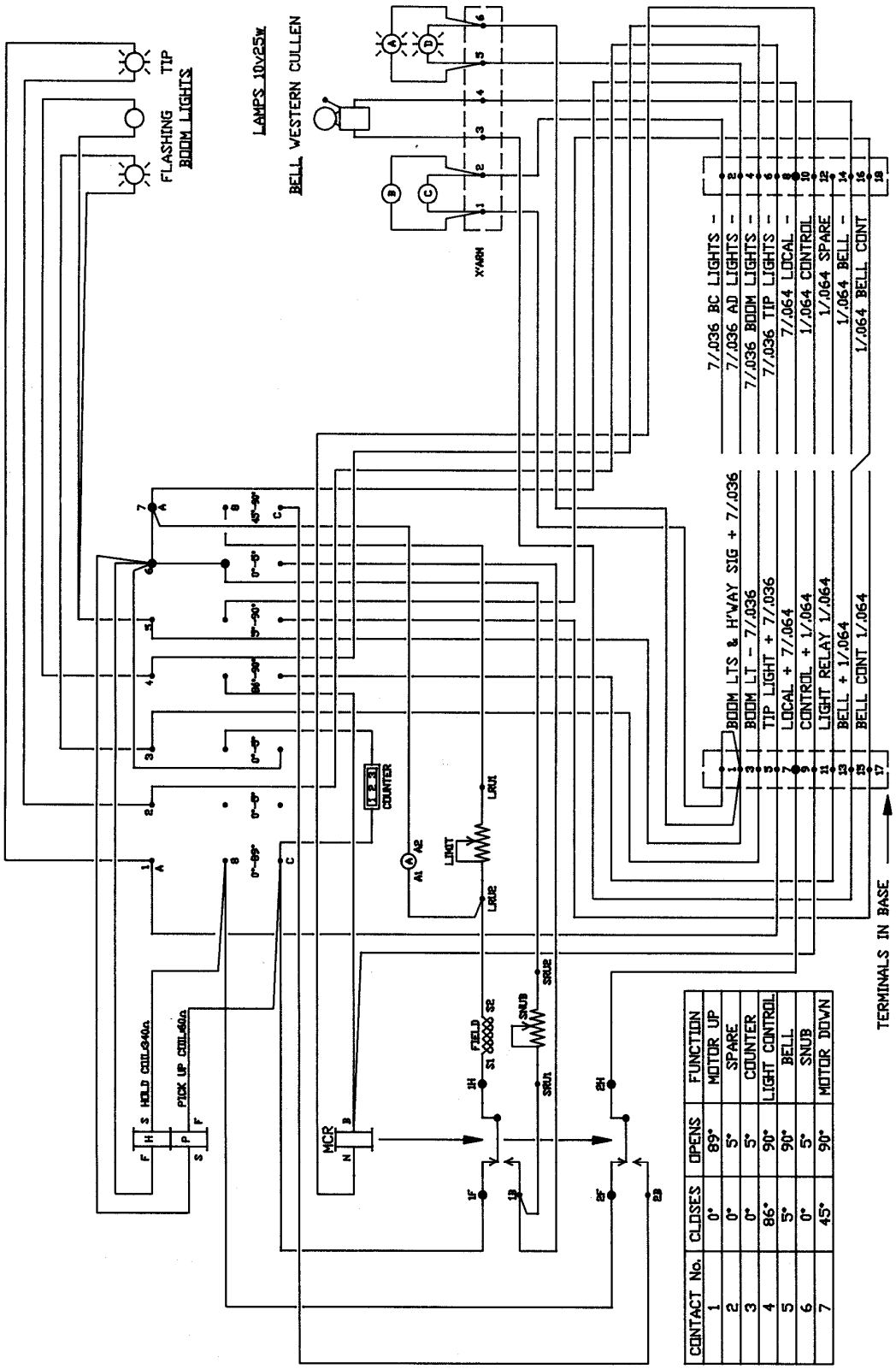

Figure 5.5.4.2 - Western Cullen Hayes 3590 mechanism circuit

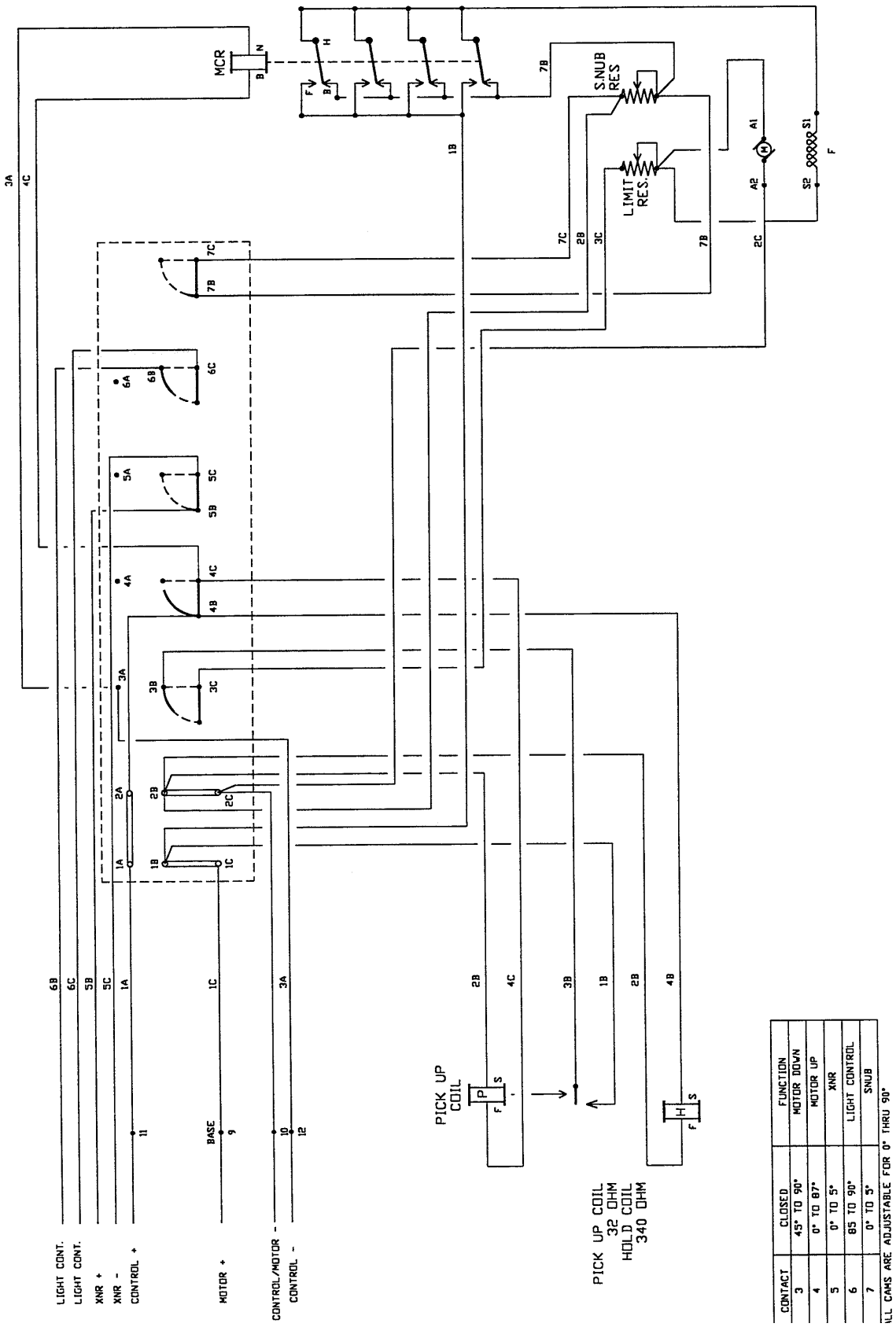

Figure 5.5.4.3 - Western Cullen Hayes 3593 mechanism circuit

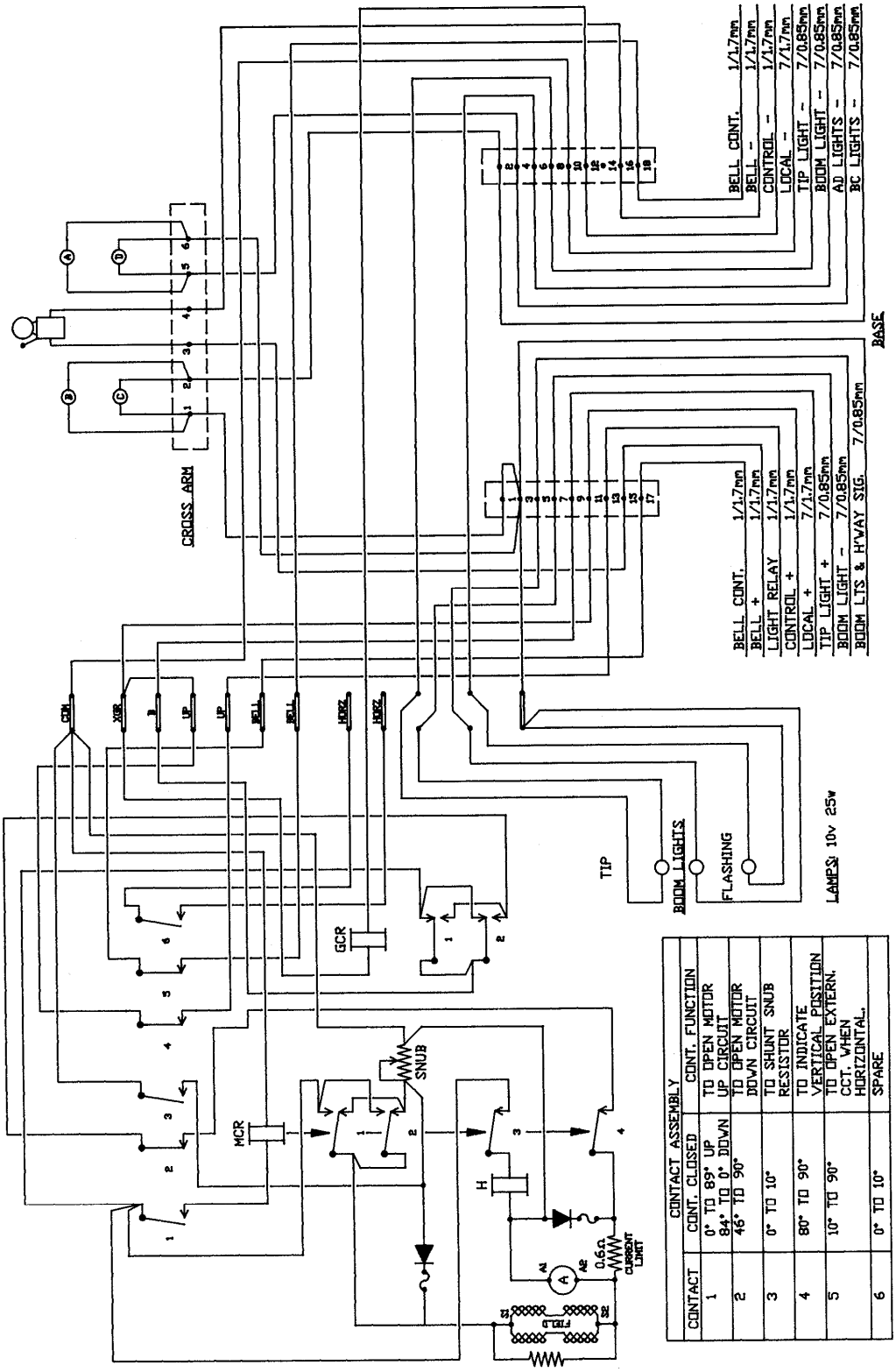

Figure 5.5.5 - Harmon Type H1 mechanism circuit

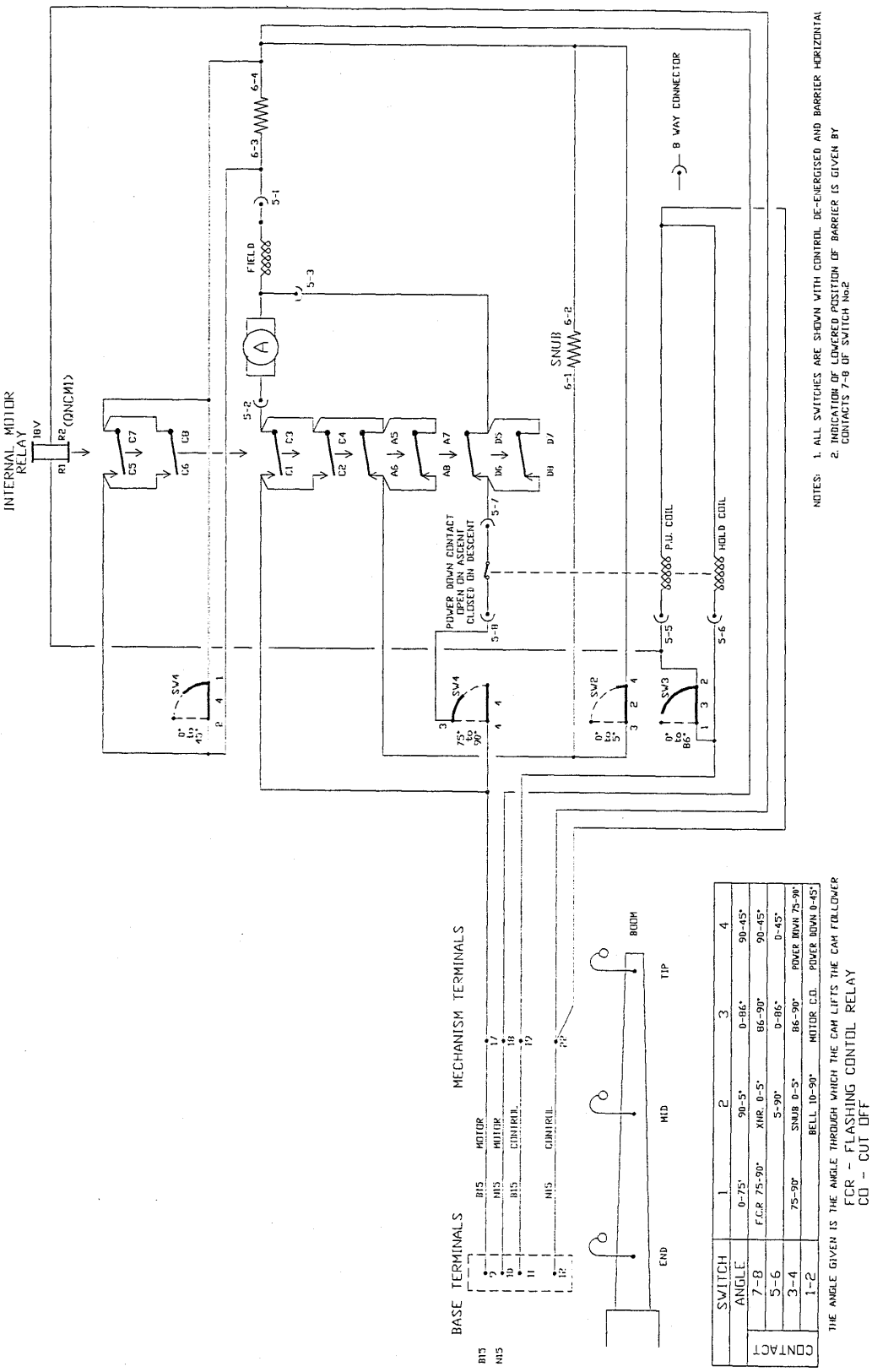

Figure 5.5.6 - Westinghouse Type EB mechanism circuit

6 Installation of level crossing equipment

This manual includes only the installation of Type F lights, bells and boom gate mechanisms and booms. It does include installation of the level crossing location, train detection systems or control equipment.

6.1 Type F lights

Typical Type F light assemblies are shown in figure 6.1.1.

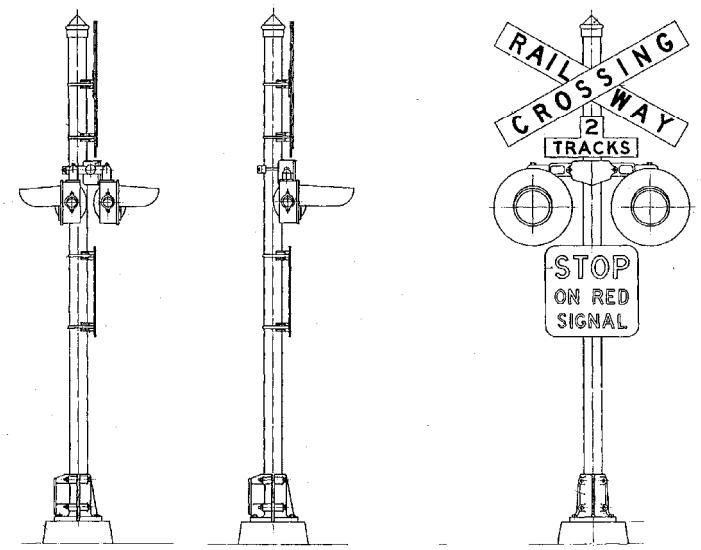

Figure 6.1.1

The lights are fixed to a crossarm by a bracket which permits a limited amount of both horizontal and vertical adjustment. The crossarm is clamped to a 100 mm NB steel post with a cable termination point built into the base of the post.

The post and signal assembly is normally workshop assembled and transported to site to be bolted to a concrete foundation.

To install, pour a concrete foundation, or install a pre-cast foundation assembly. The centre of the foundation is located 3.0 m from the running face of nearest rail and 1.2 m from the edge of the sealed pavement (or from the gutter if there is a gutter), as shown in figure 6.1.2.

The top of the concrete foundation should be approximately 150 mm above the road pavement level or, where there is a gutter, at least 75 mm above the top of the gutter.

When bolting the Type F light assembly to the foundation, shim or grout to ensure that the post is vertical.

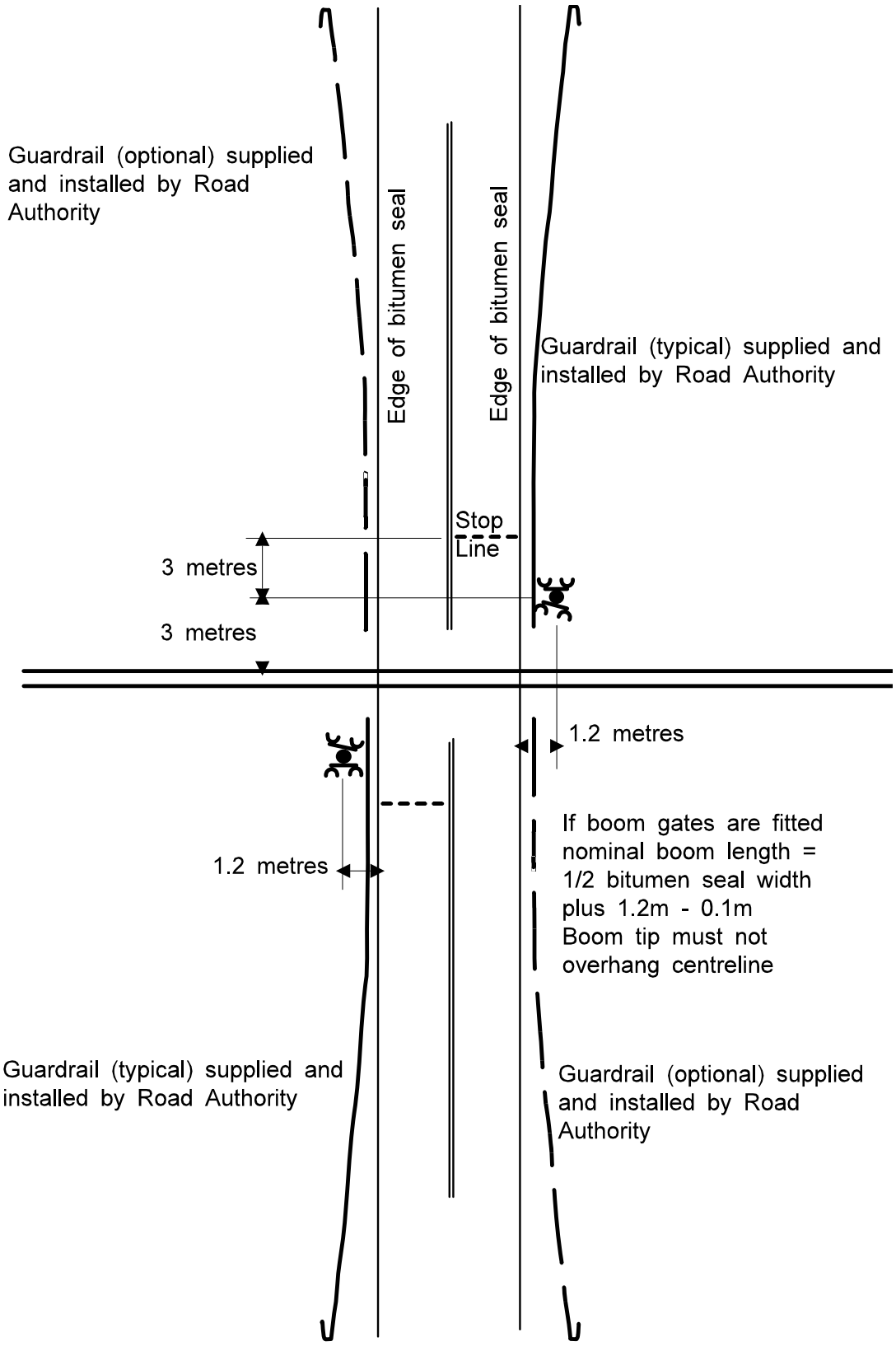

Figure 6.1.2 - Typical single line level crossing

6.1.1 Alignment (focusing) of level crossing signals

Three persons (including one to act as the viewer's lookout for road traffic) are required to align level crossing signals.

The alignment must be carried out in daylight.

For the front lights, the person who is to view the signal shall do so from the distance nominated below for the road speed limit applying to the approaches to the level crossing or at the maximum available sighting distance, whichever is less. The viewer should be positioned 1 to 1.2 meters to the left of the road centre line, for two lane roads and approximately 1 metre to the right of the lane dividing line for four lane roads. (For four lane roads both the left hand side front lights and the median strip front lights should be aligned to the same point).

For the backlights, the viewing position should be as shown on the typical situation diagrams in figures 6.1.1.1, 6.1.1.2 and 6.1.1.3. (For four lane roads, the median strip back lights [if fitted] should be aligned to the left approach lane and the opposite side backlights aligned for the right approach lane)

For straight road approaches and where incandescent lamps are used, the level crossing signal lampcase door, on the front lights only, should be opened and the signal aligned directly from the lamp and reflector.

For LED signals, for curved road approaches, for lampcases fitted with a 70º degree spread lens and for all back lights, the level crossing signals should be aligned with the lampcase door closed.

The person aligning the signal should first approximately align each lampcase to point towards the viewer with the indication beam approximately horizontal.

The lampcases should then be rotated side to side and up and down until the viewer indicates the position of maximum visibility.

With curved road approaches, the viewer should then walk back towards the level crossing checking the visibility of the signals throughout the curve.

If there is significant loss of sight of the signals, then the lampcases will need to be realigned to compensate even if this slightly reduces the intensity at the original viewing point.

If the loss of intensity is such that the signals cannot be aligned to provide full coverage from the required sighting distance over the approach to the crossing, then either additional signals at the level crossing are required or pre-warning signals are required.

It is not necessary to make any special provision for the height of the viewer. A standing person's eye level is a reasonable compromise between the eye levels of car and heavy commercial vehicle drivers.

Front lights shall be aligned to distances of:

- 130 m for road speeds of 60 km/h
- 200 m for road speeds of 80 km/h
- 300 m for road speeds of 100 km/h and
- 300 m for road speeds of 110 km/h

Note that if the approach to a crossing is curved, any speed shown on an advisory speed sign is to be increased by 25%, for the purposes of light focusing.

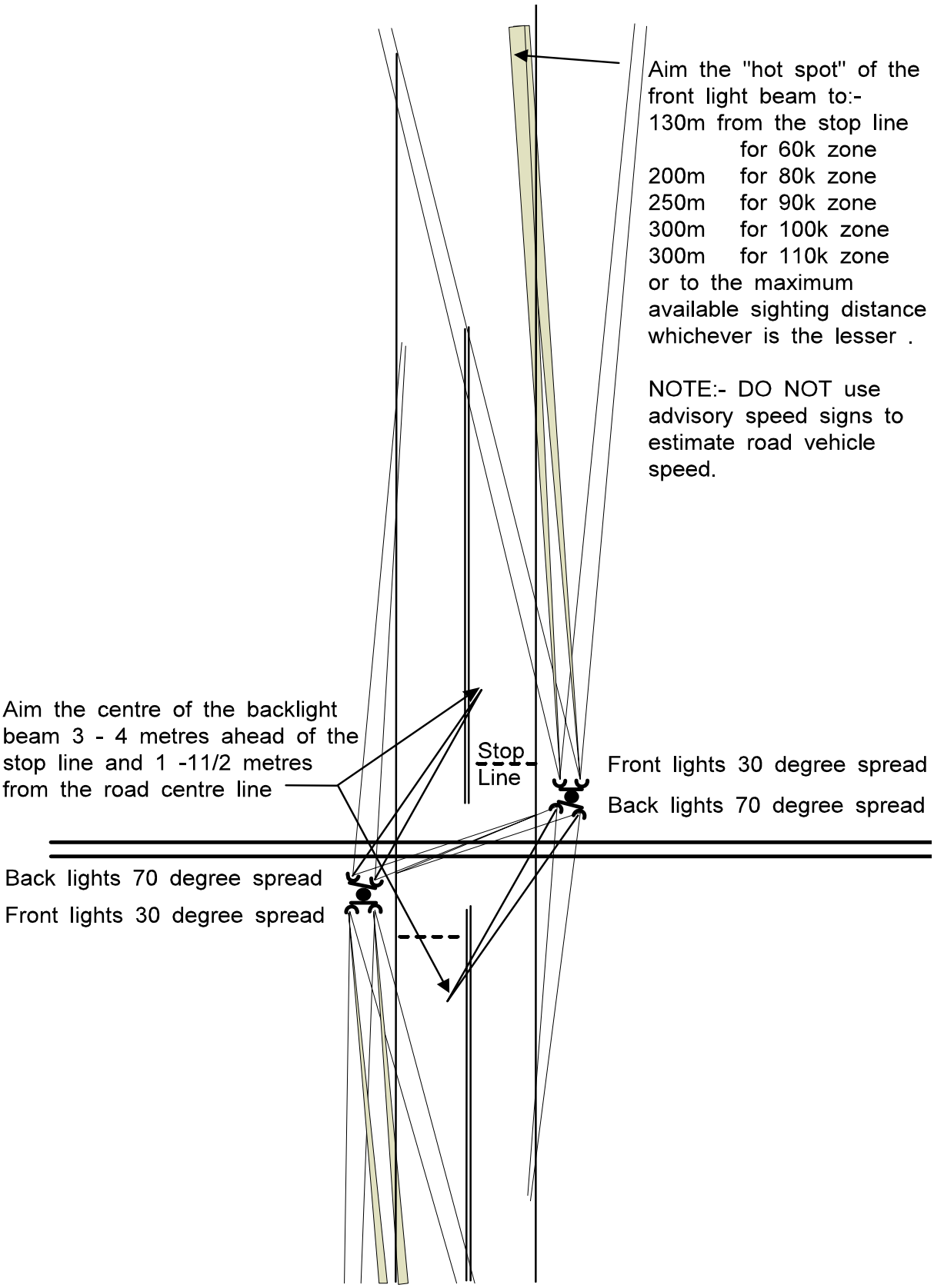

Figure 6.1.1.1 - Level crossing signal alignment - straight road approach

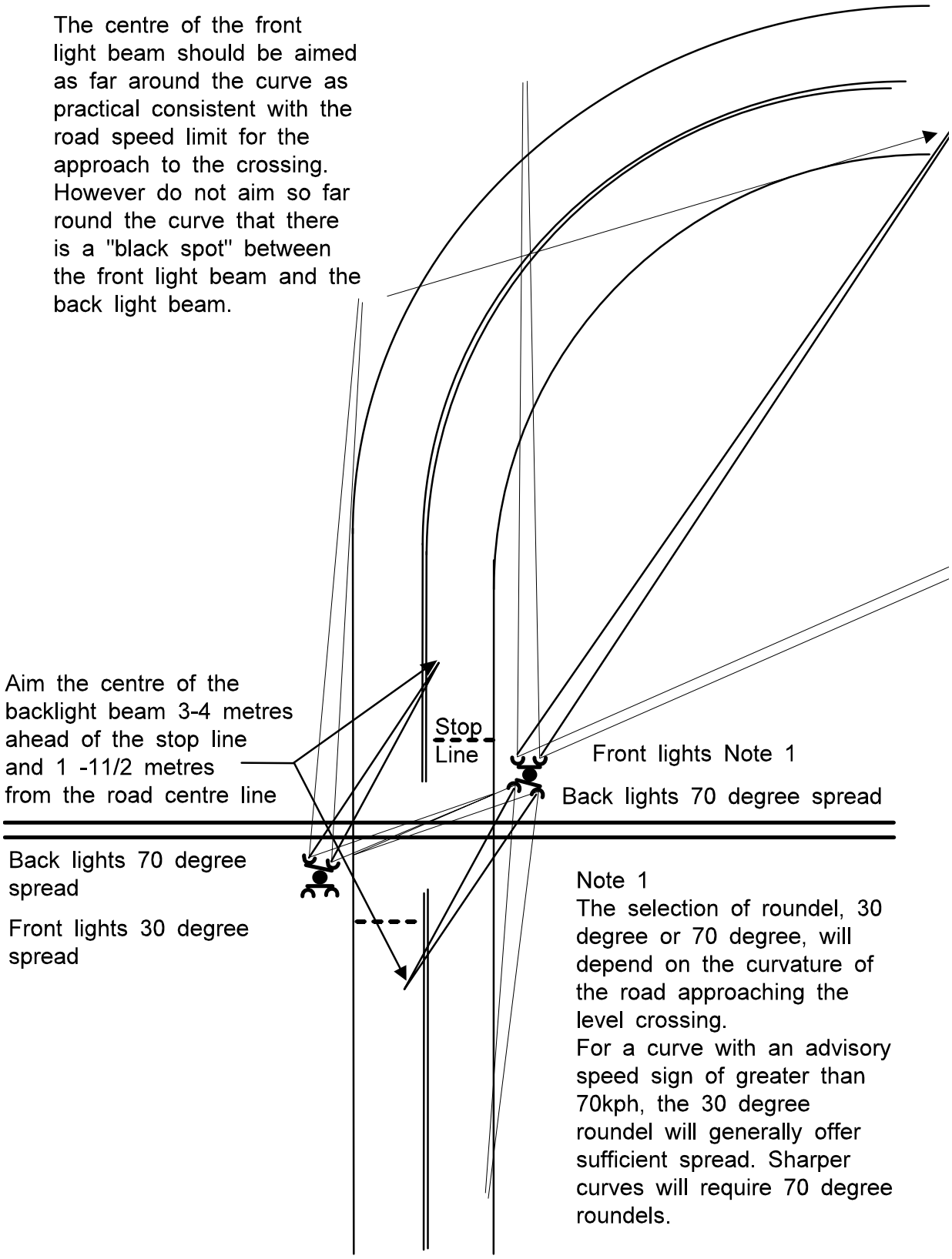

Figure 6.1.1.2 - Level crossing signal alignment - left hand curved approach

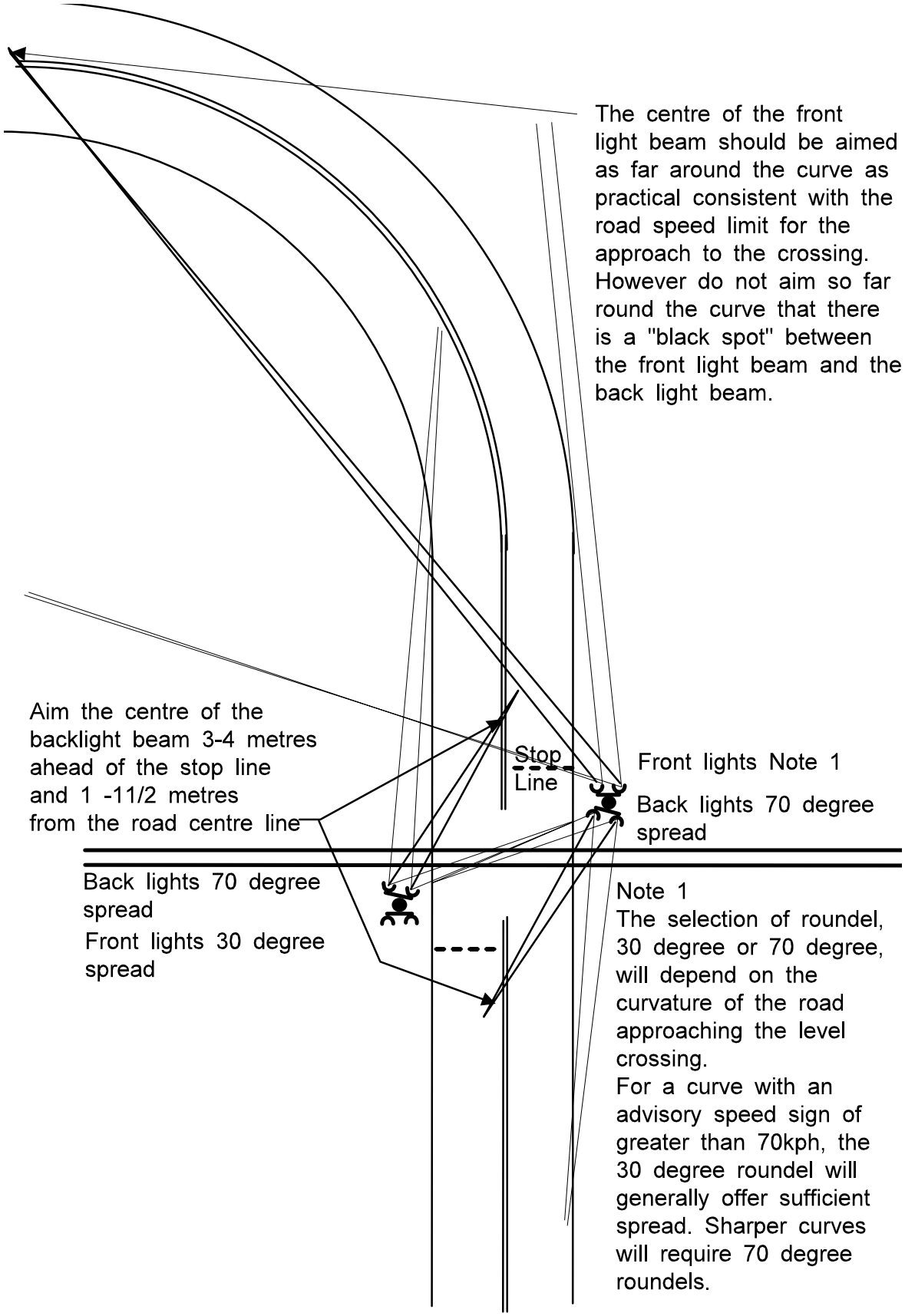

Figure 6.1.1.3 - Level crossing signal alignment - right hand curved approach

6.1.2 Additional background

Where Type F Lights face generally east and west, an additional large background as shown in figures 6.1.2.1 and 6.1.2.2, should be fitted to the lights. This background will assist in improving the visibility of the lights when the sun is behind them.

Figure 6.1.2.1 – Large background fitted to Type F lights

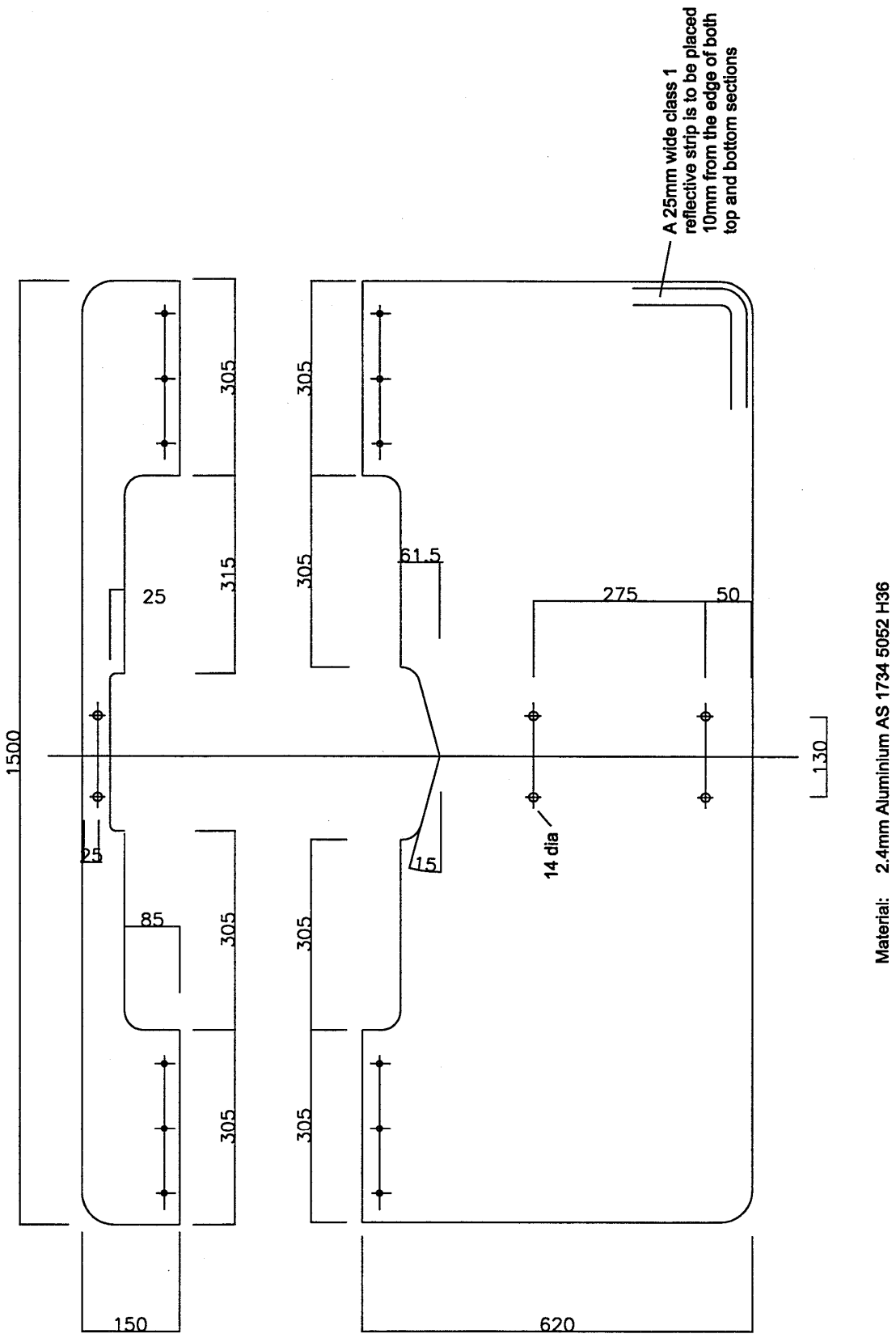

Figure 6.1.2.2 - Large background details

6.2 Bells

Where a level crossing is fitted with Type F lights, only one bell is usually fitted to the Country side light post[2]. Where booms are installed two bells, one either side of the crossing, are fitted.

The bell is mounted on top of the Type F signal or boom mechanism post with the appropriate adaptor according to the post diameter. To be most effective, the bell should be mounted with the gong rim parallel to the roadway centre line.

6.2.1 Electronic Bell Installation and Adjustment

a) Connect the positive and negative wires to the corresponding terminals at the base of the bell. (Note: The bell will operate on AC or DC voltage).

CAUTION

The bell is polarity sensitive and will not operate if the DC wires are reversed

b) Install the bell to the top of the mast and tighten the three clamping screws.

c) If adjustment to the ringing volume or rate is required, remove the pinnacle from the bell.

i) To adjust the volume, turn the adjusting potentiometer marked VOLUME:

- To increase the volume, turn clockwise.
- To reduce the volume, turn counterclockwise.

ii) To adjust the ringing rate, turn the adjusting potentiometer marked RATE:

- To increase the ringing rate, turn counterclockwise.
- To decrease rate, turn clockwise.

If it is ever necessary to replace the speaker or the electronic board, care must be taken to connect the power and speaker wires correctly. See figure 6.2.1.1:

2 The bell may be placed on the Sydney side post in those cases where this would place it further from dwellings or other occupied buildings.

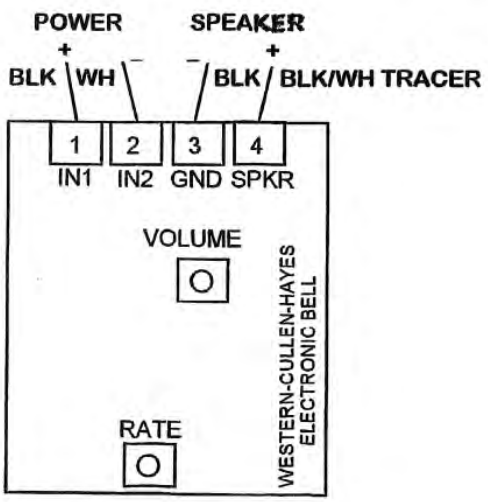

Figure 6.2.1.1 - Connecting the power and speaker wires correctly

6.3 Boom mechanisms

Similarly to Type F Lights, boom mechanisms complete with Type F lights are usually assembled onto the post in a workshop and transported to site for attachment to a concrete base.

The assembly however, does not include the boom barrier and may not include the barrier arm supports, side arms or counterweights which must be fitted and adjusted on site after the mechanism has been bolted down.

The concrete foundation for posts with boom mechanisms is located in the same position as that for Type F lights only, i.e., 3.0 m from the running face of nearest rail and 1.2 m from the sealed edge of the road pavement (or gutter).

The foundation is larger than that for Type F lights and generally requires greater depth in ground. Drawings of typical pre-cast foundations are shown in the appendix of this manual.

When bolting the post to the concrete foundation, shim or grout between the base and foundation to ensure that the post is vertical.

6.3.1 Assembly of mechanism on post (where not supplied pre-assembled)

Fit the mechanism support bracket to the post and loosely clamp the mechanism to the post.

Adjust the height of the support bracket and mechanism so that the boom shaft is 1450 to 1500 mm above the crown of the road (approximately 1320 mm above the top of the concrete foundation).

Swing the mechanism so that the boom will be parallel to the road.

Ensure that the main shaft is in the horizontal position (quadrant in contact with the top stop screw), figure 6.3.2.1.

Fit the side arms to the main shaft but do not tighten the nuts on the shaft.

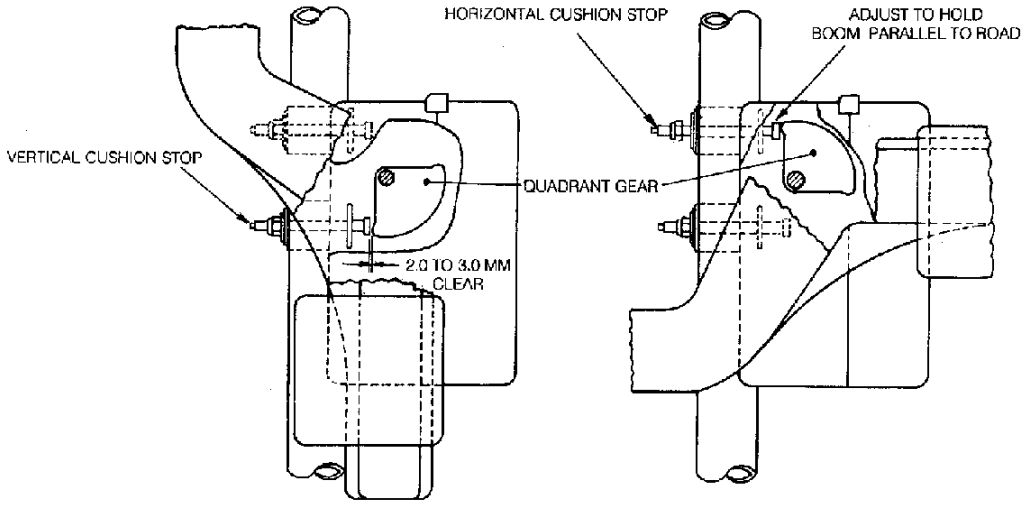

Figure 6.3.2.1 - Boom arm stops

6.3.2 Assembly of boom arm

Check the height of the mechanism main shaft from the crown of the road. This should be 1450 to 1500 mm. If necessary adjust the height of the mechanism and mechanism support.

Rotate the mechanism on the mechanism support so that the boom will be parallel to the road when fitted.

Ensure that the main shaft is in the horizontal position, i.e., when the internal quadrant is in contact with the upper stop screw, figure 6.3.2.1.

If the boom (gate arm) support (or adaptor in the case of fibreglass booms) is not fitted, slacken the nuts on the main shaft and fit the gate arm support to the side arms. Retighten the main shaft nuts.

Fit the boom barrier to the boom support and tighten the securing bolts.

If not already fitted, fit the boom lights to the boom in the positions shown in figure 6.3.2.2. and wire to the intermediate junction boxes.

Complete the wiring between the boom and mechanism and, if not already installed, between mechanism and base, bell and base and Type F lights and base.

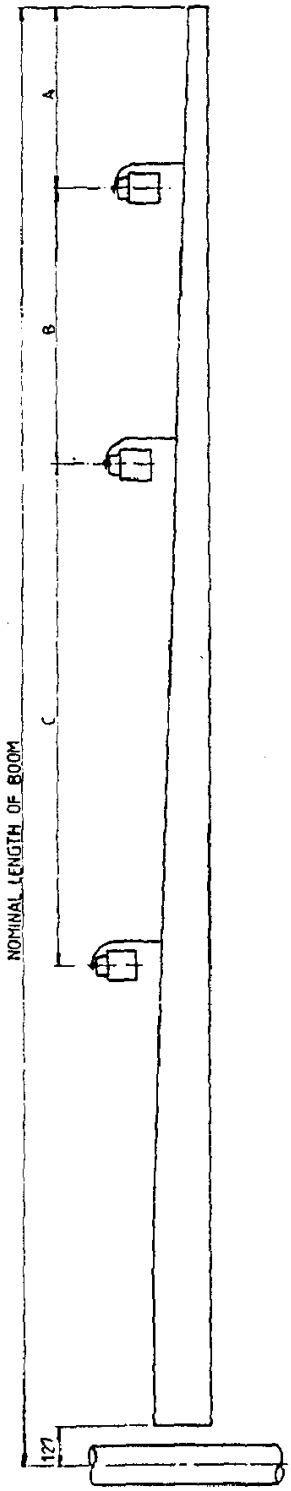

NOMINAL LENGTH OF BOOM	DIMENSION 'A'	DIMENSION 'B'	DIMENSION 'C'
4270	150	910	1520
4570	460	910	1520
4880	610	910	1680
5180	610	1220	1680
5490	690	1450	1680
5790	690	1750	1680
6100	690	2060	1680
6400	690	2360	1680
6710	690	2210	1680
7010	690	1220	1830
7320	690	1520	1830
7620	690	1980	1830
7930	690	1370	1830
8230	690	1680	1830
8540	690	1980	1830
8840	690	1220	1830
9140	690	1520	1830

SUGGESTED SPACING OF BOOM LIGHTS.

Figure 6.3.2.2 – Boom light locations

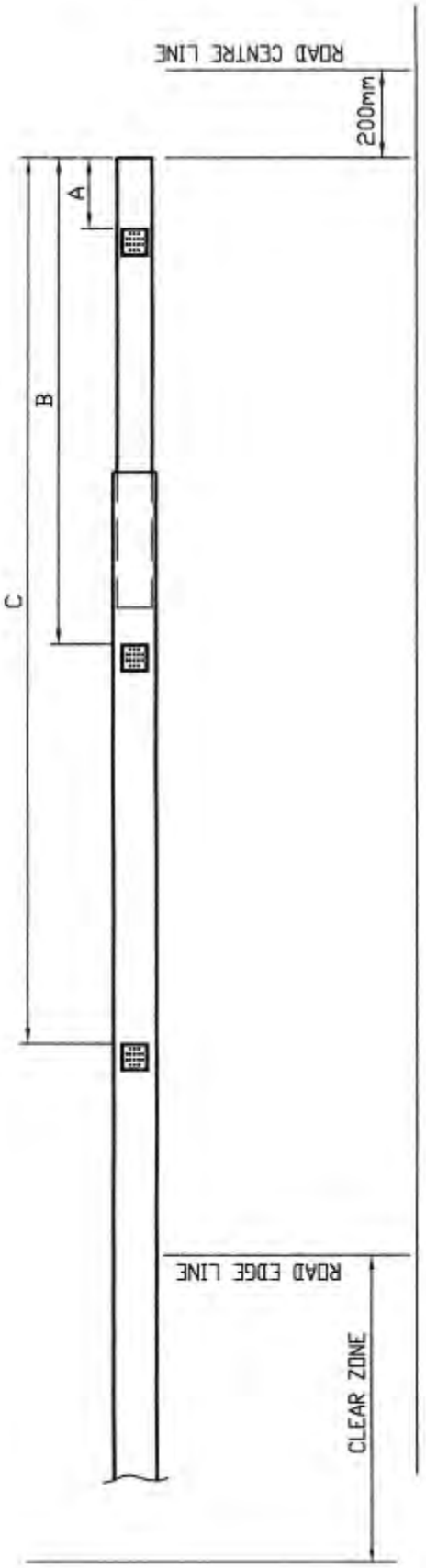

No. OF LANES	DIMENSIONS		
	A	B	C
1	310	1200	2400
2	610	2000	4300
3	610	3000	6000

NOTE: DIMENSIONS 'B'&'C' MAY NEED TO BE VARIED DEPENDING ON ACTUAL LANE WIDTH.

Figure 6.3.2.3 – Boom with LED lights

6.3.3 Counterweighing

The boom must be counterweighted, or counterbalanced, so that the mechanism can raise the boom at a reasonable speed and an acceptable current and so that the boom will fall by gravity alone if there is a power failure, blown fuse, cable fault or similar.

Refer to figures 6.3.3.1, 6.3.3.2 and 6.3.3.3 and table 6.3.3.1

Commence with the boom in the horizontal position.

Refer to the table of boom lengths for the particular type of mechanism being used. Note that the boom length is measured from the centre-line of the mechanism post to the tip of the boom.

Select the required sizes of counterweight(s) listed for each of the mechanism types and fit to one or both arms as shown in the tables.

As shown in figures 6.3.3.1 and 6.3.3.2, attach a spring balance to the boom at a distance of 1.5 m from the centre of the main shaft

Slightly raise the boom clear of the internal stop in the mechanism and adjust the counterweights horizontally until the balance shows a steady reading of 4.5 kg for WRRS and Western Cullen Hayes Mechanisms, 9 kg for Harmon H1 mechanisms and 7 kg (±10%) for Westinghouse EB mechanisms. This represents horizontal torques ranging from 6.75 kgm to 13.5 kgm depending on type of mechanism.

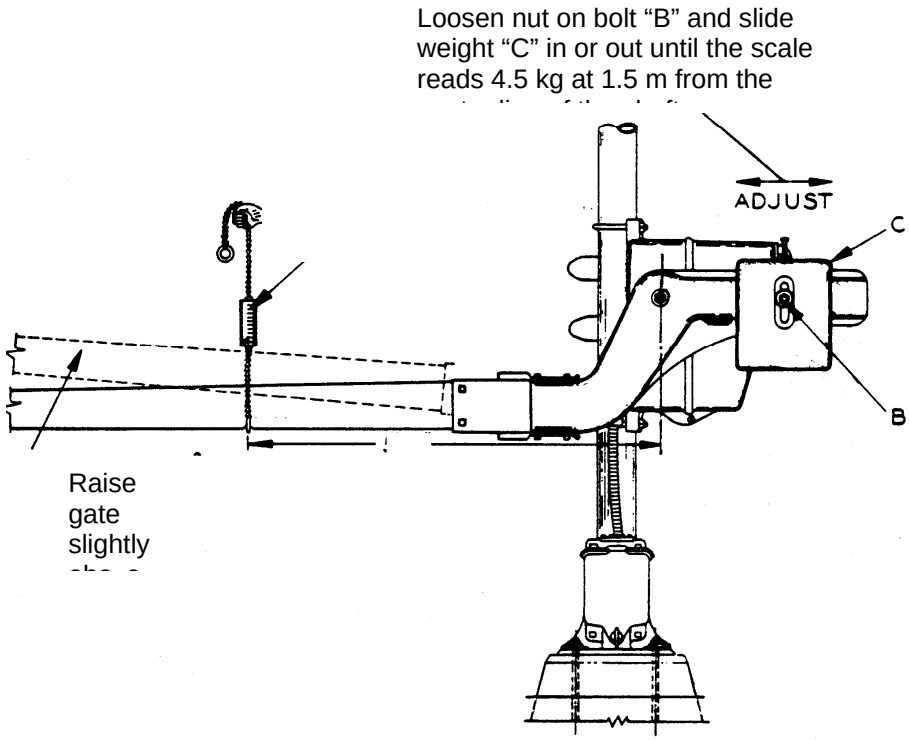

Figure 6.3.3.1 – WRRS Type B and D and Western Cullen Hayes mechanisms counterweight setting scale location

BOOM LENGTH m	APPROX TOTAL MASS OF COUNTERWEIGHTS kg	NOTES
4.3	72.5	Counterweights may be
4.9	84	installed on one side only
5.5	106.5	
6.1	118	
6.7	129	
7.3	163.5	
7.9	179	Divide counterweights
8.5	213	between side arms
9.2	281	
9.8	190	Mass shown assumes that
10.4	213	extensions are fitted to
11.0	236	side arms
11.6	258.5	
12.2	281	

Table 6.3.3.1 – – WRRS Type B and D and Western Cullen Hayes mechanisms, boom length v counterweight required

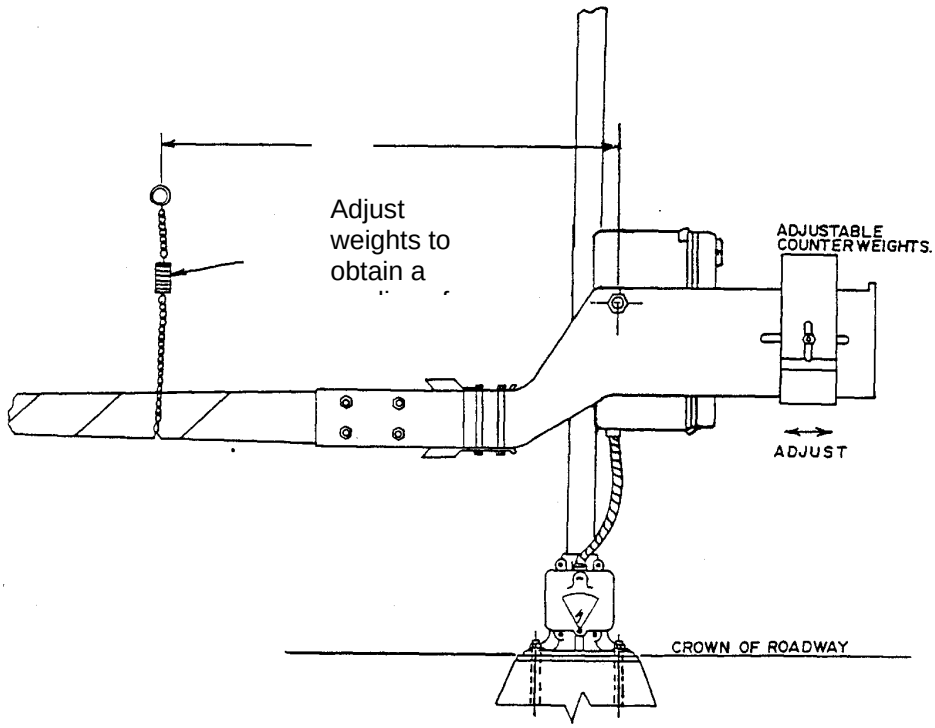

Figure 6.3.3.2 - Harmon H1 mechanism counterweight setting scale location

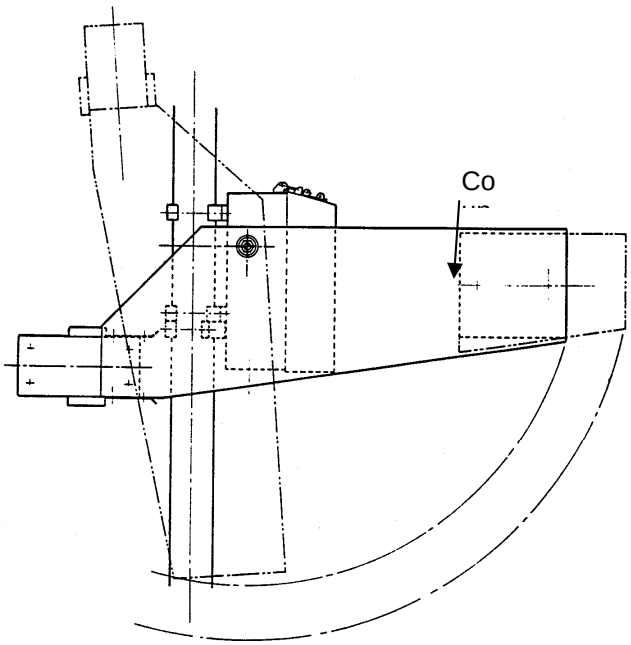

Figure 6.3.3.3 - Westinghouse EB Mechanism

There is no weight position adjustment on this mechanism. The number of weights is varied to obtain the correct scale reading

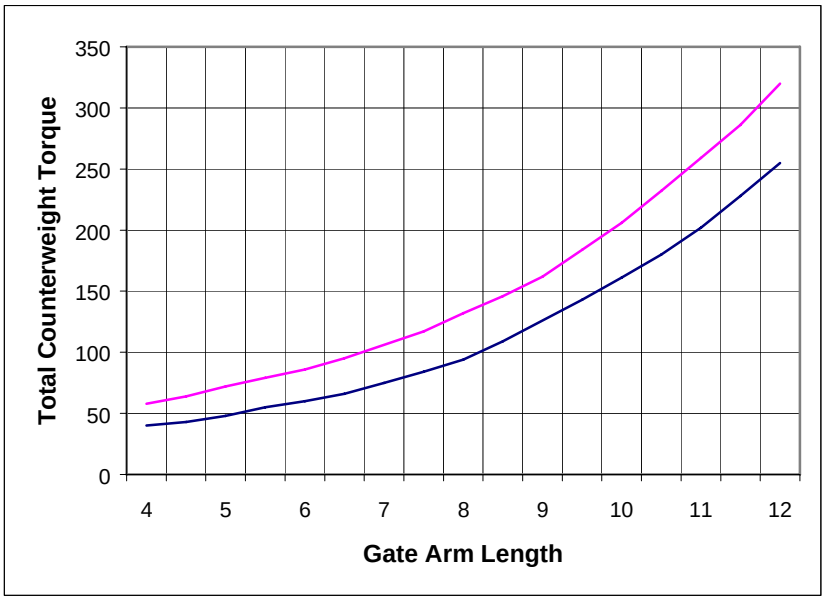

Weights available				
Long Series P/N 43003 020 -	01	02	03	
Torque (kgm)		31	15.5	7.8
Short Series P/N 43003 019 -	01	02	03	04
Torque (kgm)	27	17	8.5	4.3
Thickness (mm)	30	20	10	5

Table 6.3.3.3 - Westinghouse EB mechanism counterweights

Remove the cover of the upper spring buffer, loosen the locknut on the stop screw and turn the screw in the required direction to set the boom horizontal.

The boom can now be driven up and the vertical or clear torque setting can be adjusted.

WARNING

Ensure that the boom will not foul any overhead wires when driven up

If necessary, adjust the motor cutout contact so that the boom stops at the correct angle for the mechanism type, i.e.

88º to 89º for WRRS, Western Cullen Hayes and Harmon H1 mechanisms and 87º for Westinghouse EB mechanisms.

Remove the cover of the lower stop screw , release the locknut and adjust the screw so that there is 2.0 to 3.0 mm clearance between the screw and the quadrant for WRRS and Western Cullen Mechanisms and zero clearance for Harmon H1 mechanisms. (Westinghouse mechanisms are factory set and adjustment is not necessary).

It is now necessary to set the vertical torque adjustment except on Westinghouse EB mechanisms which are factory set and not adjustable.

WARNING

If the level crossing protection has been commissioned into service, the level crossing must be protected in accordance with the appropriate Safeworking Unit when adjusting or testing vertical torque.

As shown in figures 6.3.3.5 and 6.3.3.6, fit a spring balance between the boom and the mechanism post. Refer to the tabulations for each type of mechanism to determine the correct position for the spring balance.

Also tie a safety rope which will prevent the boom falling more than about 10º.

Disconnect power from the mechanism so that the boom is free to fall under gravity but cannot be driven down.

Allow the boom to fall a few degrees (2 to 4 is sufficient) and take a reading on the spring balance.

Adjust the counterweights as necessary.

When the correct reading is obtained, tighten and lock the counterweights.

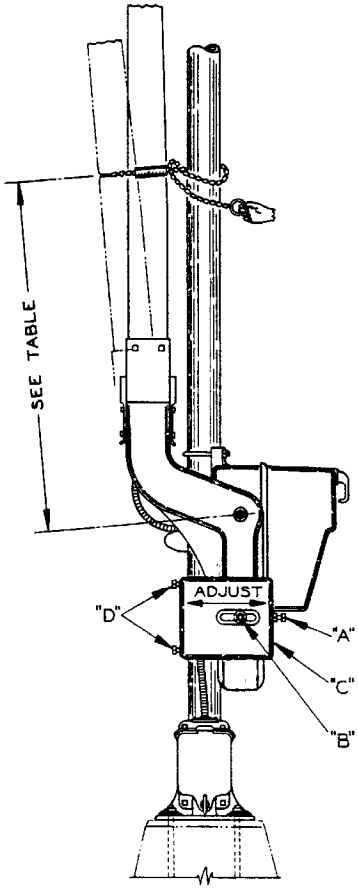

		Scale reading In Kg at distance shown from main shaft centre			
Boom Length m	Vertical Torque Nm	1.5 m	2.14 m	2.75 m	3 m
Up to 7.32	271	18.15			
7.62	298	20.00			
7.93	325	21.80			
8.23	339	22.70			
8.54	361		17.25		
8.84	380		18.15		
9.15	408		19.50		
9.45	417.5		20.00		
9.76	427		20.40		
10.06	467		22.20		
10.36	500			18.6	
10.67	525			19.5	
10.97	549			20.4	
11.28	586			21.8	
11.58	610			22.7	
11.89	637				21.3
12.2	651				21.8

Figure 6.3.3.5 - WRRS and Western Cullen Mechanisms vertical torque adjustment

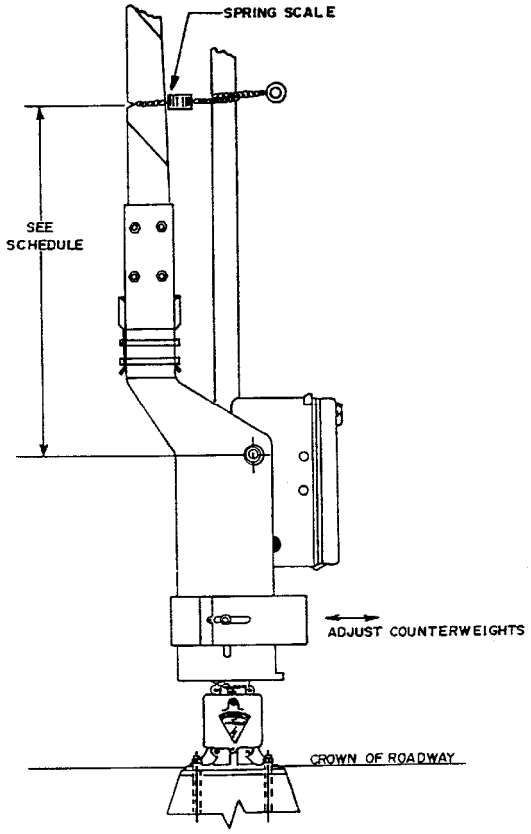

		Scale Reading In Kg at distance shown from Main shaft Centre			
Boom Length m	Vertical Torque Nm	1.5 m	2.14 m	2.75 m	3 m
4.27 to	237	15.90			
7.62	237	15.90			
7.93	258	17.25			
8.23	277	18.60			
8.54	296		14.52		
8.84	315		15.43		
9.15	334		16.34		
9.45	354		17.25		
9.76	373		18.15		
10.06	392		19.10		
10.36	411			15.43	
10.67	430			16.34	
10.97	450			16.80	
11.28	469			17.70	
11.58	488			18.15	
11.89	508				17.25
12.2	527				17.70

Figure 6.3.3.6 - Harmon H1 Mechanism vertical torque adjustment

Reconnect power and operate the boom down and up to re-check the vertical stop position. Adjust the circuit controller if necessary.

Time the boom descent. For all mechanisms it should be between 10 and 12 seconds. Adjust the snub resistor (Westinghouse mechanism excepted) to obtain the required descent time and to ensure both booms fall evenly.

Ensure that the slide of the snubbing resistor is making good contact with the resistor winding and is firmly locked in place.

WARNING

An open circuit at the snub resistor will allow the boom to free fall which could cause injury and/or damage to the boom and mechanism

The boom is now ready to be swung across the road when the level crossing protection is commissioned.