For queries regarding this document
standards@transport.nsw.gov.au
www.asa.transport.nsw.gov.au

Technical Note - TN 022: 2015

Issued date: 09 April 2015

Effective date: 09 April 2015

Subject: Withdrawal of ESC 420 *Track Drainage*

This technical note is issued by the Asset Standards Authority as a notification to remove from use the RailCorp standard ESC 420 *Track Drainage*, Version 2.3.

ESC 420 is a legacy document and shall be used for reference purposes only. ASA standard T HR CI 12130 ST *Track Drainage*, Version 1.0 supersedes this document.

Authorisation:

	Technical content prepared by	Checked and approved by	Interdisciplinary coordination checked by	Authorised for release
Signature				
Name	Mel O'Sullivan	Joe Muscat	John Paff	Graham Bradshaw
Position	Principal Engineer Structures and Bridges	A/Lead Civil Engineer	A/Chief Engineer Rail	Principal Manager, Network Standards and Services

© State of NSW through Transport for NSW

Superseded by T HR CI 12130 ST

Engineering Standard
Civil

ESC 420

TRACK DRAINAGE

Version 2.3

Issued August 2011

Owner:	Chief Engineer Civil		
Approved by:	John Stapleton Principal Engineer Technology & Standards	Authorised by:	Richard Hitch Chief Engineer Civil

Disclaimer

This document was prepared for use on the RailCorp Network only.

RailCorp makes no warranties, express or implied, that compliance with the contents of this document shall be sufficient to ensure safe systems or work or operation. It is the document user's sole responsibility to ensure that the copy of the document it is viewing is the current version of the document as in use by RailCorp.

RailCorp accepts no liability whatsoever in relation to the use of this document by any party, and RailCorp excludes any liability which arises in any manner by the use of this document.

Copyright

The information in this document is protected by Copyright and no part of this document may be reproduced, altered, stored or transmitted by any person without the prior consent of RailCorp.

Engineering Standard

NSW Transport RailCorp

Superseded by T HR CI 12130 ST

Document control

Version	Date	Summary of change
2.3	August, 2011	Changes detailed in summary table below
2.2	February, 2011	Section 2.2 - Update references to CAD Manual; Section 4.7 - Change approving authority for drainage cells to Chief Engineer Civil; Section 6.9 Change minimum lap of geotextile from 300 mm to 200 mm.
2.1	November, 2009	Change to position title for Chief Engineer
2.0	May, 2009	Change of format for front page, change history and table of contents; format change throughout; Section 3.2 new standard drawing for headwalls; updated standard drawing for ballast cage; new section 5.7 on prohibited configurations; Section 7.1 clarification of requirements for double vs multiple tracks; Section 7.2: change in design load for pipes under access roads: new Appendix; new Appendix 2.
1.1	April, 2007	Minimum slope for pipes clarified in 7.2
1.0	September, 2006	First issue as RailCorp document. Replaces RTS 3433 Track Drainage – Design and Construction

Summary of changes from previous version

Summary of change	Section
Reformat in new template	All
New section on Integrated Designs	5.1
Additional requirements for lined channels	5.2
Add reference to new standard drawing CV 0205421	6.2
Additional requirements for sump grates re ease of manual removal	6.6
Product approval specification for plastic drainage products	8

Superseded by T HR CI 12130 ST

Contents

1 Purpose, Scope and Application 4
2 References 4
2.1 Australian and International Standards 4
2.2 RailCorp Documents 4
2.3 Other References 4
3 Definitions 5
4 Drainage Design - General 5
4.1 Introduction 5
4.2 Drainage System Type 5
4.3 Design Life 5
4.4 Design Average Recurrence Interval (ARI) 6
4.5 Peak Flow Rate 6
4.6 Other Design Considerations 6
4.7 Prohibited Configurations 6
5 Surface Drainage Design 6
5.1 Integrated Designs 6
5.2 Cess Drains 7
5.3 Catch Drains 8
5.4 Mitre Drains 8
6 Subsurface Drainage Design 8
6.1 General 8
6.2 Pipes 9
6.3 Trench Excavation 10
6.4 Pipe Bedding Type 10
6.5 Inlets and Outlets 11
6.6 Sumps 11
6.7 Flushing Points 12
6.8 Aggregate Drains 12
6.9 Geotextiles 12
7 Documentation Requirements 13
7.1 Drawings 13
7.2 Hydrology/Hydraulic Reports 13
8 Product Approval Specification- Plastic Drainage Products 13
Appendix A Approved Track Drainage Products 15
Appendix B R Loading Configuration 16

Superseded by T HR CI 12130 ST

1 Purpose, Scope and Application

This Standard establishes the design requirements for track drainage systems to be installed on the RailCorp network.

It covers drainage of the track formation, supporting embankments and cuttings.

This standard does not cover drainage from platforms, buildings, overbridges, footbridges, airspace developments, external developments, access roads, roads outside the rail corridor, Council drains or properties adjacent to the rail corridor.

This standard does not include culvert design or selection.

2 References

2.1 Australian and International Standards

AS 1289 - Methods of testing soils for engineering purposes

AS 2566.1 - *Buried flexible pipelines - Part 1: Structural design*

AS 3572 *Plastics - Glass filament reinforced plastics (GRP) - Methods of test*

AS 3706 - Geotextiles – Methods of test

AS 3725 - Loads on buried concrete pipes

AS 4678 *Earth-retaining structures*

AS 5100 - Bridge design

2.2 RailCorp Documents

ESC 310 - Underbridges

ESC 410 - Earthworks and Formation

TMC 421 - Track Drainage Manual

TMD 0001 - CAD and Drafting Manual – All Design Areas - Sections 1 and 2

TMD 0001- CAD and Drafting Manual – Civil Design - Section 3

TMD 0001 - CAD and Drafting Manual – Track Design - Section 7

CV 0205421 - Track Drainage - Typical Sections and Notes

CV 0400998 - Ballast Cage (Lobster Pot) with Removable Lid

CV0497068 - Pipe Culverts Headwalls to Suit Pipes 225-600mm Diameter

CV0497069 - Pipe Culverts Headwalls to Suit Pipes 675-1800mm Diameter

2.3 Other References

Australian Rainfall and Runoff, Institution of Engineers Australia 1987

Superseded by T HR CI 12130 ST

3 Definitions

Cess drain:	located at formation level at the side of the track
Catch drain:	intercepts overland flow or run-off before it reaches the track and related structures such as cuttings or embankments
Mitre drain:	connected to cess and catch drains to remove water or to provide an escape for water from these drains
Track drainage:	drainage of the track formation including diversion of water away from cuttings and embankments
Multiple tracks:	More than 2 tracks

4 Drainage Design - General

4.1 Introduction

This document sets out RailCorp design requirements for surface and sub-surface track drainage.

This standard should be read in conjunction with RailCorp Engineering Manual *TMC 421 - Track Drainage* which details more fully the design process as well as installation and maintenance aspects.

Track drainage is to be designed to capture water flows calculated in accordance with this standard.

No other drainage is to be discharged into the track drainage system without the approval of the Chief Engineer Civil.

Only staff with the appropriate RailCorp Engineering Authority shall carry out the design of track drainage.

4.2 Drainage System Type

The type of system chosen for each location is dependent on the site restraints, water source, track structure and maintenance requirements.

The two types of drainage systems are surface and subsurface.

Surface drains should be used in preference to subsurface drains wherever possible as they are easily inspected and maintained.

Subsurface drains are used where adequate surface drainage cannot be provided due to some restriction or lack of available fall due to outlet restrictions. Locations where these circumstances may occur are:

- platforms
- cuttings
- junctions
- multiple tracks
- bridges

4.3 Design Life

The minimum design life of all track drainage components shall be 50 years with consideration given to site location and groundwater conditions.

Superseded by T HR CI 12130 ST

4.4 Design Average Recurrence Interval (ARI)

The average recurrence interval (ARI) shall be 50 years.

Proposed variations to the design ARI due to site constraints or other factors shall be supported by a risk assessment and shall be approved by the Chief Engineer Civil.

4.5 Peak Flow Rate

Estimation of the volume of surface water that requires to be drained shall be determined using the Rational Method as detailed in *Australian Rainfall & Runoff*, adopting the design average recurrence interval.

A range of storm events representing varying rainfall duration shall be investigated. The drainage design shall be carried out adopting the critical rainfall event.

The catchment areas required for peak flow rate calculations shall be determined using (in order of preference) site survey, site measurements or suitably scaled topographic maps.

Account shall be taken of water flowing onto the rail corridor from adjoining properties and streets.

4.6 Other Design Considerations

When selecting a pipe, the type of environment shall be considered (i.e. is the water abrasive, acidic or alkaline). The manufacturer's specifications should be consulted regarding the pipe's suitability to various environments.

The possible effects of non-standard ballast profiles shall be considered.

Geometry effects of laying longitudinal pipes adjacent track around curves shall be considered (eg may require reduced sump centres).

The permanent effects of the drainage system located alongside existing structures such as overhead wiring structures, retaining walls, platforms, embankments, shall be taken into account. The possibility of causing instability of an existing structure during the excavation stage must also be highlighted and accounted for.

Conflict with existing services shall be considered. Service searches shall be conducted and the locations of these services indicated on the design documentation.

4.7 Prohibited Configurations

The following configurations are not approved for track drainage on the RailCorp network:

- plastic pipes: unplasticised polyvinylchloride (UPVC); polypropylene
- inverted syphon systems.

Drainage cell systems shall only be used with the approval of the Chief Engineer Civil.

5 Surface Drainage Design

5.1 Integrated Designs

The design of surface drainage systems shall be integrated taking into account associated requirements such as possible obstructions from overhead wiring structure

Superseded by T HR CI 12130 ST

footings and signals equipment, the interface with the formation and capping of adjacent tracks and the potential for ballast to fall into and block the drain.

The installation of additional tracks on the outside of existing tracks shall not compromise the integrity and effectiveness of the drainage on the existing tracks. Where necessary, the drainage system for the existing tracks shall be redesigned to comply with the requirements of this standard. The requirement for multiple tracks is that the water from one track shall not cross another track to get away. For example, if there are three tracks, there shall be at least one subsurface centre drain.

5.2 Cess Drains

The flow capacity of the open channel cess drain shall be greater than the peak flow rate.

For ease of maintenance, over sized channels can be adopted to allow a certain degree of sediment build up to occur and still work effectively. The minimum dimensions in mm of an open channel shall be: A= 200, B= 200, C= 300 as detailed in Figure 1.

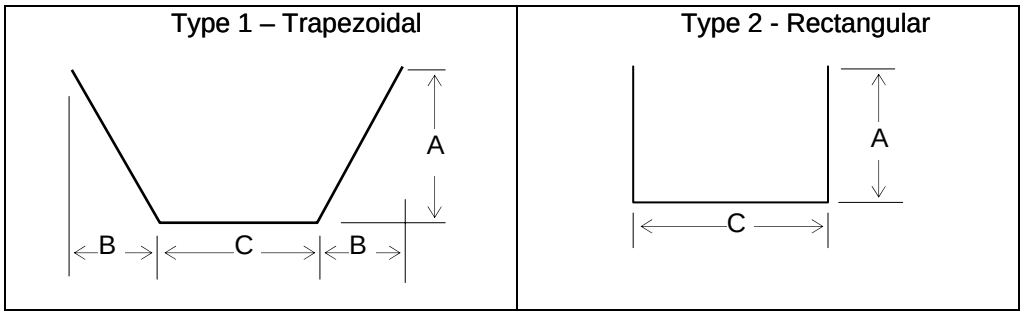

Figure 1 – Minimum channel sizes

The minimum slope for an open channel shall be 1:200.

The location of the open channel shall comply with the formation shoulder distance specified in RailCorp Engineering Standard *ESC 410 - Earthworks and Formation*.

Where track drainage is incorporated within existing track constraints (eg cuttings, between tracks) and the shoulder distance cannot be achieved, open channels are to be at an adequate distance from the track to prevent ballast spill into the channel area. In this case, the edge of the channel closest to the track shall be a minimum of 2800 mm from the design track centre. This minimum edge distance shall be increased as required based on track configuration (rail size, sleeper type, ballast depth) and track curvature.

The top of lined channels shall be no higher than the top of the adjacent track formation(s).

The material forming the open channel shall to be capable of withstanding the maximum permissible design velocity. Table 1 below gives maximum velocity values for varying lining types.

Channel Type	Velocity (m/s)
Fine sand	0.45
Silt loam	0.60
Fine gravel	0.75
Stiff clay	0.90
Coarse gravel	1.20
Shale, hardpan	1.50

Superseded by T HR CI 12130 ST

Grass Covered	1.8
Stones	2.5
Asphalt	3.0
Boulders	5.0
Concrete	6.0

Table 1 - Maximum Permissible Velocities

If problems are encountered or an area is prone to erosion, then geotechnical advice should be sought.

If fibre reinforced concrete is specified, synthetic fibres shall be used.

All cess drainage systems shall be designed to discharge to an approved watercourse or existing drainage system, and the approval of the appropriate authority shall be obtained.

5.3 Catch Drains

Catch drains shall be provided on the uphill side of a cutting to divert water from the cutting face. Drains shall be 1000 mm minimum from the face of the cutting.

Catch drains shall be provided on the uphill side of embankments to divert water from the embankment toe. Drains shall be 1000mm minimum from the toe of the embankment.

Catch drains may be either lined or unlined depending on the local soil conditions. Half round pipes or dish drains may be used instead of lined channels.

The location of drains shall comply with the requirements of *ESC 410*.

5.4 Mitre Drains

Where mitre drains are required, they shall be provided at regular centres with a drain located approximately every 100 metres maximum. They should be installed at the ends of cuttings.

The minimum slope of mitre drains shall be 1 in 200.

The ends of mitre drains shall be splayed to disperse water quickly and reduce scouring.

6 Subsurface Drainage Design

6.1 General

Subsurface drains are used where adequate surface drainage cannot be provided due to some restriction or lack of available fall due to outlet restrictions.

Subsurface drainage shall be provided in locations where the water table is at or near earthworks level.

Subsurface drainage shall be provided along the cess, between, across, or under tracks as required.

With double and multiple tracks, the requirement is that the water from one track shall not cross another track to get away. Drainage shall be provided by sumps and pipes in the ‘six-foot’ as required.

Superseded by T HR CI 12130 ST

Advice should be sought from the Principal Geotechnical Engineer before designing and installing sub-surface drainage.

Subsurface drainage systems shall be designed to take surface runoff, ground water and seepage, and water collected from other drainage systems to which the new system is being connected.

Most systems will only have to cater for surface runoff.

If a drainage system is required to remove ground water and seepage, a detailed hydrological and geotechnical investigation is required to determine the volume of water for the sizing of drains.

The volume of water from other systems is determined from the outlet capacity of that system.

6.2 Pipes

The capacity of the proposed drainage system shall be determined using the peak flow rate calculated by the Rational Method, with adjustment made for subsurface water and water collected from other systems. The peak flow velocity within the pipe shall be less than the manufacturer recommended maximum limits.

Pipes larger than the design size may be adopted to reduce the likelihood of the system becoming blocked and also enable easier cleaning. The minimum pipe diameter shall be 225 mm (for ease of maintenance cleaning).

The slope of pipes shall be 1 in 100. Where this is not achievable, the pipe shall be laid at the maximum achievable slope. Slopes flatter than 1 in 200 require the approval of the Chief Engineer Civil.

Depth of pipes under the track shall be 1600 mm minimum from top of rail to top of pipe or pipe encasing.

Depth of pipes running parallel to the track shall be 600 mm minimum from the design cess level to top of pipe.

At specific sites where it is not feasible to comply with these pipe depth requirements and achieve an effective drainage system design, the pipe depth may be reduced to:

- 1200 mm minimum from top of rail to top of pipe or pipe encasing for under track pipes
- 300 mm minimum from the design cess level or 1000 mm from top of adjacent rail (whichever produces the lowest invert level) to top of pipe for pipes running parallel to the track.

Acceptable pipe materials are:

- reinforced concrete
- fibre reinforced concrete
- steel
- products listed in Appendix A.

Approved proprietary products shall be designed and installed in accordance with the manufacturer's specifications.

Steel pipes shall be designed to mitigate the effects of electrolysis and stray track currents. Designs shall be in accordance with the requirements of RailCorp's Chief Engineer Electrical Systems.

Superseded by T HR CI 12130 ST

Both slotted and unslotted pipes may be used depending on the system type and its means of collecting and carrying water.

Slotted pipes are preferred, as these do not rely on surface flow between sumps to collect water.

Slotted pipes and perforated pipes are not suitable for under track pipe work.

Minimum strength requirements are detailed in Table 2. The strength of reinforced concrete and fibre reinforced concrete pipes shall be determined in accordance with *AS 3725 - Loads on buried concrete pipes*.

Material	Type	Minimum strength class
Reinforced concrete	Slotted and unslotted	4
Fibre reinforced concrete	Slotted and unslotted	4
Steel	Slotted, perforated & unslotted	N/A

Table 2 – Acceptable pipe types and minimum strength requirements

If railway live loads are applicable, then the pipes must be designed for train loads specified in RailCorp Engineering Standard *ESC 310 - Underbridges*. The Bridge Design Code *AS 5100 - Bridge design*, does not provide guidance on a suitable impact factor for railway loads distributed on fill. A dynamic load allowance (DLA) shall be adopted which varies linearly from 1.5 at 0.3 m depth to 1.0 at 3.5 m depth or greater (where the depth is measured from the top of rail).

Where slotted pipes are used, strength reductions for the slots shall be included in the design and shall be based on manufacturer's recommendations.

Pipes located under sections of the rail corridor used for road vehicle access along the rail corridor, shall be designed for the R20 design load. See Appendix B for details of the R loading configuration.

Refer to RailCorp drawing *CV 0205421 - Track Drainage - Typical Sections and Notes* for details of typical cross sections.

6.3 Trench Excavation

The width of trenches should only be as wide as necessary to ensure proper installation and compaction.

The minimum trench width shall be pipe diameter plus 150 mm on each side.

For longitudinal drains located either within 2500 mm of the track centre line or between tracks where track centres are less than 6000 mm, the minimum trench width shall be pipe diameter plus 100 mm on each side.

Trenches shall be backfilled with suitable material and compacted to not less than 95% maximum dry density as determined by *AS.1289 Methods of testing soils for engineering purposes - Tests 5.1.1 and 5.3.1 (Standard Compaction)*.

6.4 Pipe Bedding Type

When determining the class of pipe to be specified in a sub-surface drainage system the bedding type assumed should be appropriate for what can be achieved during construction. Most under track drainage is constructed during track possessions where

Superseded by T HR CI 12130 ST

the more stringent requirements for placement and compaction of bedding material cannot always be achieved.

For under track crossings that are to be constructed during a limited track possession, type “U” bedding in accordance with *AS 3725* shall be used in design.

6.5 Inlets and Outlets

To prevent soil erosion, all inlet/outlet points shall be provided with an appropriate size concrete headwall to suit the ground profile. Refer to RailCorp drawings *CV 0497068* and *CV 0497069* for standard concrete headwalls.

The ground covering at the pipe exit points shall be capable of withstanding the exit flow rates. Scour protection or energy dissipating devices may be required if existing ground cover cannot withstand the design rate.

Where the sediment load of the water being discharged from a drainage system is high, a silt trap shall be included.

6.6 Sumps

Sumps are required as access points for surface water as well as for maintenance of the drainage system.

Sumps shall be spaced at 30 to 50 metre centres, except through platforms where spacing shall be 20 to 30 metre centres. Reduced centres may be applicable in the 6-foot between tracks to account for track curvature.

The minimum internal plan dimensions of a sump shall be 600 mm x 600 mm for depths greater than 1m. Minimum internal plan dimensions of 450 mm x 450 mm are acceptable for depths less than 1m.

Precast sumps with risers used to accommodate varying depths are to be adopted in preference to cast-in situ sumps.

All sumps are to be provided with a heavy-duty cast iron grate cover. In addition, all sumps within 2800 mm of a track centre, or where site restraints dictate the possibility of ballast covering a pit, then a ballast cage (lobster pot) shall be provided. Refer to RailCorp drawing *CV 0400998* for details. For locations where access for off-track equipment is limited, the grates shall be designed for ease of removal manually e.g grates on a sump to be manufactured in two sections rather than one. These grates shall be lockable.

Ballast cages shall be of heavy-duty construction, capable of withstanding live loading from construction machinery. The cage shall be positioned to the outside edges of the sump. When installed the cages shall not extend above the top of sleeper level.

Where the internal sump height (including risers) exceeds 1200 mm, the following must be provided:

Step rungs are to be provided at 300 mm vertical centres. If possible, the step runs shall be located on the face looking at the oncoming train traffic (ie either Sydney face for the down track or Country face for up track).

Sump riser heights are to be selected such that step rungs do not come within 50 mm of the top or bottom of the riser.

Where sumps are located in the 6-foot between tracks, the internal dimensions of the sump shall be increased to a minimum of 600 mm wide (perpendicular to the tracks) x

Superseded by T HR CI 12130 ST

900 mm to accommodate inspection access. The width shall be the maximum size available to enable proper placement of the sump and ballast cage (lobster pot) without clashing with the sleepers.

The internal dimensions of the sump in areas excluding the 6-foot, shall to be increased to a minimum of 900 mm x 900 mm to accommodate inspection access.

6.7 Flushing Points

Ground water and seepage drains shall have flushing points at appropriate intervals.

Flushing points shall consist of “T” or “L” connections in the sub-surface pipe, with pipe connections extending to the surface for regular flushing with water to clear the sub-surface drain of fouling material.

6.8 Aggregate Drains

Aggregate drains are only suitable for use where small flow of ground water or seepage is expected. They are not to be used for the collection of surface water.

The design of permeable drains may be carried out using Darcy’s equation.

The permeability of clean gravel can range from 0.01 to 1.0 m/s. The aggregates used in aggregate drains are either 20 mm nominal diameter or 53 mm diameter (ballast), the permeability of these aggregates is:

- 20 mm aggregate k = 0.15 m/s
- 53 mm aggregate k = 0.40 m/s

Aggregate drains are to be lined with a geotextile.

6.9 Geotextiles

The main purpose of a geotextile used in subsurface drainage is to act as a filter, which helps prevent silting-up of the drain it is protecting. The selected geotextile is to achieve the following characteristics:

- good permeability through the fabric material
- good filtering qualities
- resistance to clogging by particle fines
- ability to stretch and conform to the shape of an open trench.

The selected geotextile is to exhibit the following mechanical properties as a minimum when tested in accordance with AS 3706 - Geotextiles – Methods of test:

- Tear Strength of 400N
- G Rating of 2000
- Grab Strength of 1100N.

Geotextiles used in subsurface drainage shall fully line the trench and have a minimum lap at the top of 200 mm but not exceeding 50% of the width at the top. The wrapped trench is to be covered by a minimum of 100 mm of aggregate.

Superseded by T HR CI 12130 ST

7 Documentation Requirements

7.1 Drawings

All drawings are to comply with the relevant sections of the following RailCorp Engineering Manuals:

TMD 0001 - CAD and Drafting Manual – All Design Areas - Sections 1 and 2

TMD 0001- CAD and Drafting Manual – Civil Design - Section 3

TMD 0001 - CAD and Drafting Manual – Track Design - Section 7

Drawings shall include details of:

- site survey and plan
- track alignments and levels
- drainage layout and details, including existing drainage
- location of structures, natural features and services
- design average recurrence interval
- pipe loading design criteria
- cross sections
- longitudinal sections
- depth of pipes
- trenches and backfilling
- pipe jacking or boring under tracks
- pipe or open channel installation details
- sump and pit details, including a pit table
- scour protection
- detention basin details
- temporary support of existing structures.

7.2 Hydrology/Hydraulic Reports

Where a hydrology report is required, it shall include:

- site description & background
- catchment details
- design methodology
- hydrologic parameters adopted for the analysis
- hydraulic parameters adopted for the analysis
- analysis results
- output from computer modelling
- photographs of the site.

8 Product Approval Specification- Plastic Drainage Products

The following information is to be submitted when requesting approval of plastic drainage products:

1. Material properties:

- Creep – testing to show tensile stress at which polymer strain virtually stops increasing with time
- 50 year and 100 year Modulus and Stress
- Short term tensile stress and strain at yield.
- Long term UV resistance of polymer with >2% finely dispersed carbon black

Superseded by T HR CI 12130 ST

- Carbon black dispersion
- Conductivity
- Fire resistance
- Chemical resistance
- Toxicity
- Sustainability
- Stress crack resistance of polymer
- Details of testing of resins used in the manufacturing process:
  - Melt flow
  - Density
  - IZOD impact test

2. Calculations using dead and live loads:

   - Deflection.
   - Long term strain check
   - Combined axial strain and bending strain check
   - Buckling – Factor of safety check

3. Tests on Pipe:

   - Impact / Brittleness Test
   - Stress crack resistance of finished pipe.
   - Manning's n value for pipe & pipe material
   - Abrasion resistance

4. Details of jointing systems including strength and watertightness.

5. Copies of test results/reports. These must reference applicable Australian or International Standards and tests must have been carried out by a registered testing facility. Relevant Standards include AS 3572 *Plastics - Glass filament reinforced plastics (GRP) - Methods of test.*

6. Sampling and testing plan

7. History of usage in rail applications and dynamic loading assessment

8. Details of any testing under rail loadings.

9. Compliance with relevant Codes/ Practices including copy of design software/spreadsheets for analysis and evaluation of equations, assumptions and calculations. Relevant Standards include AS 2566.1 *Buried flexible pipelines - Part 1: Structural design.* Polymer long term material property assessments should broadly comply with the methods in AS 4678 *Earth-retaining structures* Appendix K.

   Note: As the stiffness of plastic products degrades over time, long term stiffness is particularly important. Adequate performance over long term service life in rail applications has to be demonstrated.

10. Cost comparison with conventional equivalent material such as Concrete or FRC pipes

11. Brochures with material data, charts, specifications, photos etc.

Superseded by T HR CI 12130 ST

Appendix A Approved Track Drainage Products

Manufacturer	Supplier	Type
ADS	Cubic Solutions	High density polyethylene (HDPE)#

Except in tunnels

Superseded by T HR CI 12130 ST

Appendix B R Loading Configuration

The 'R' vehicle is a rigid truck with the same configuration as the prime mover portion (first 3 axles) of the 'T' vehicle and the numerical portion is the vehicle's weight in tonnes.

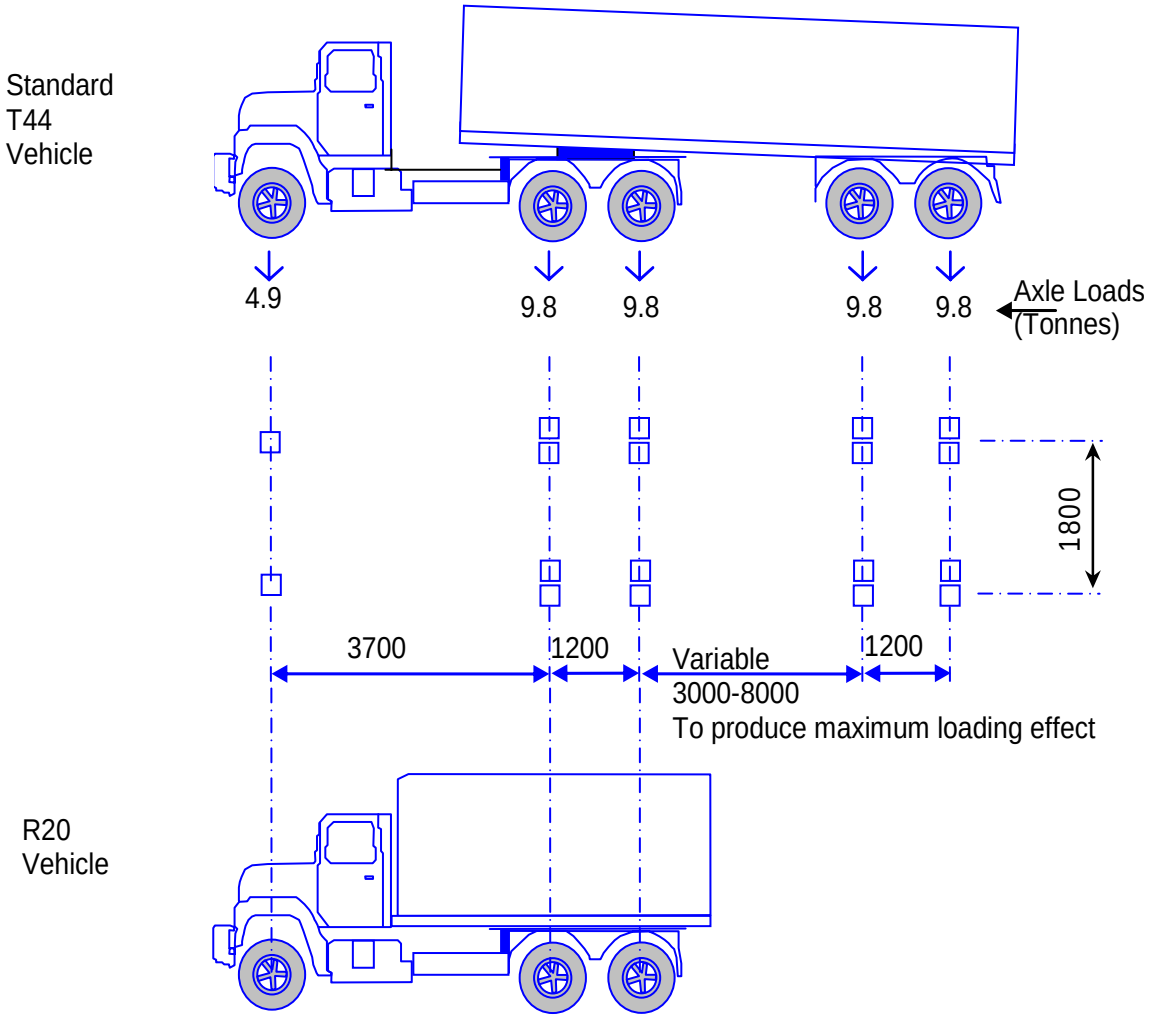

Figure 2 - Design vehicle configurations