For queries regarding this document
standards@transport.nsw.gov.au
www.asa.transport.nsw.gov.au

Technical Note - TN 014: 2017

Issued date: 18 May 2017

Effective date: 18 May 2017

Subject: Withdrawal of RailCorp CBI documents

The ASA has published T HR SC 00719 SP *Computer-Based Interlocking Equipment* which supersedes RailCorp Engineering Specification SPG 0719 *Computer-Based Interlocking Requirements v1.3*. This has affected the status of related RailCorp specifications and guidelines.

The following documents are withdrawn due to the publication of T HR SC 00719 SP *Computer-Based Interlocking Equipment.* Although they will not be updated, the content of these documents may be used by an AEO when preparing their processes and documentation. The withdrawn documents are shown below:

- SPG 1230 *Design of Microlok II Interlocking* v1.7
- SPG 1869 *Microlok Interlocking Diagnostic, Data Logging and Replay Facilities* v1.4
- EGG 1232 *Microlok Interlocking Simulation (MISS) System Design Guidelines* v1.2

Note: EGG 1653 *Ethernet Enable Modular Signalling* v1.0 is also superseded by T HR SC 00719 SP *Computer-Based Interlocking Equipment.*

© State of NSW through Transport for NSW 2017

Authorisation:

	Technical content prepared by	Checked and approved by	Interdisciplinary coordination checked by	Authorised for release
Signature				
Name	Greg Hockings	Peter McGregor	Michael Uhlig	Jagath Peiris
Position	Principal Engineer, Electronic Systems	Lead Signals and Control Systems Engineer	A/Chief Engineer	A/Director Network Standards and Services

© State of NSW through Transport for NSW 2017

Superseded by T HR SC 00719 SP v1.0, 29/03/2017

Engineering Specification
Signals
Construction Specification

SPG 0719

COMPUTER-BASED INTERLOCKING REQUIREMENTS

Version 1.3

Issued 23 August 2012

Engineering Specification

Owner:	Warwick Allison, Chief Engineer Signals and Control Systems		
Approved by:	Warwick Allison Chief Engineer Signals and Control Systems	Authorised by:	Paul Szacsvay Principal Engineer Signal Technology

Disclaimer

This document was prepared for use on the RailCorp Network only.

RailCorp makes no warranties, express or implied, that compliance with the contents of this document shall be sufficient to ensure safe systems or work or operation. It is the document user's sole responsibility to ensure that the copy of the document it is viewing is the current version of the document as in use by RailCorp.

RailCorp accepts no liability whatsoever in relation to the use of this document by any party, and RailCorp excludes any liability which arises in any manner by the use of this document.

Copyright

The information in this document is protected by Copyright and no part of this document may be reproduced, altered, stored or transmitted by any person without the prior consent of RailCorp.

NSW Transport RailCorp

Superseded by T HR SC 00719 SP v1.0, 29/03/2017

Document control

Version	Date	Summary of change
1.0	12 December 2006	Replaced *SC 05 40 00 00 SP Computer-Based Interlocking Requirements v3.0* of November 2001
1.1	12 May 2008	Corrections to cross-references and formatting
1.2	May 2010	Application of TMA 400 format.
1.3	23 August 2012	2.1 SDG 0731 -> SPG 1009, but same title

Summary of changes from previous version

Summary of change	Section
SDG 0731 changed to read SPG 1009	2.1

Superseded by T HR SC 00719 SP v1.0, 29/03/2017

Contents

1 Scope....6
1.1 Intent of Specification....6
1.2 Definitions....6
1.3 Abbreviations....12
1.4 Copyright and Licensing....12
1.5 Company Confidential Documents....13
2 Applicable Documents....13
2.1 Referenced Specifications and Standards....13
3 Requirements....14
3.1 Fitness for Purpose....14
3.2 Quality Standards....15
3.3 Standards....15
3.3.1 Design Standards....15
3.3.2 Design Changes (to CBI System)....15
3.3.3 Supplier Manufacturing and Repair Standards....15
3.4 Year 2000 – Compliance....16
3.5 CBI System Design Life....16
3.6 System Software (CBI)....16
3.7 Safety....16
3.7.1 Previous Operational Use and Safety....17
3.7.2 Diversity....17
3.7.3 Security....17
3.7.4 Degradation of Software....17
3.7.5 Security of Site-Specific Data....18
3.7.6 Wrong Side Failure Performance....18
3.7.7 Occupational Health and Safety....18
3.7.8 Edges and Projections....18
3.7.9 Equipment Weights....18
3.7.10 Maintenance Access....18
3.7.11 Labelling....19
3.8 CBI System Configuration....19
3.9 Interfaces to CBI System....19
3.9.1 Contact Resistance....19
3.9.2 Signalling interface circuits....19
3.9.3 Input of Signalling Equipment Indications....20
3.9.4 Relay Interface Requirement....20
3.9.5 Interface to Adjacent Signalling Systems....20
3.9.6 Operator Interface....20
3.9.7 Level Crossings....20
3.9.8 Points/Turnouts....21
3.9.9 Signals....21
3.9.10 Track Circuits....21
3.9.11 Vital Communications Links....21

Superseded by T HR SC 00719 SP v1.0, 29/03/2017

3.9.12 Power Supplies 22
3.10 Alterations to Signalling Layout 24
3.11 Design System 24
3.11.1 Design System - Data Preparation Software 25
3.11.2 Generation of Site-Specific Data 25
3.11.3 Site-Specific Data 26
3.12 Simulator 26
3.13 Maintainer's Terminal 27
3.13.1 Description 27
3.13.2 Requirements 27
3.14 Vital Blocking Facilities 27
3.15 Event Recorder 28
3.15.1 Requirements 28
3.15.2 Remote access facility 29
3.16 Documentation 29
3.16.1 English Language 30
4 Performance 31
4.1 Operation of CBI System and Signalling Equipment 31
4.1.1 Diagnostics and Fault Reporting 31
4.1.2 Operational Performance Response Times 31
4.2 Availability 32
4.3 Reliability 32
4.3.1 Signalling System 32
4.3.2 System Configuration 32
4.3.3 Reliability Estimation 33
4.3.4 Traffic Density Classification 34
4.3.5 Categories of Failure 35
4.3.6 Determining the Category of Failure 35
4.3.7 Reliability and Preventative Maintenance Monitoring 37
4.3.8 CBI System Upgrades and Modifications 38
4.4 Maintenance 38
4.4.1 Local Support 38
4.4.2 Safety Procedures 38
4.4.3 Maintainability Performance 39
4.4.3.1 Preventative Maintenance 39
4.4.3.2 Corrective Maintenance 39
4.4.4 Modularity and Sub-Systems 39
4.4.5 Recovery Times 40
4.4.6 Training 40
4.4.7 Fault Finding 43
4.4.8 Spare Parts 43
4.4.9 Consumables 44
4.4.10 Test Equipment 44
4.4.11 Test Points 44
4.4.12 Test Sets 45
4.4.13 Maintainability Demonstration 45

Superseded by T HR SC 00719 SP v1.0, 29/03/2017

4.4.14 Maintainability Monitoring 46
4.4.15 Defects Liability Service 46
4.5 Environmental Performance Requirements 47
4.5.1 Temperature 47
4.5.2 Relative Humidity 48
4.5.3 Mechanical Shock and Vibration 48
4.5.4 Traction Interference 48
4.5.5 High Voltage Surges (including Lightning) 48
4.5.6 Electrical Interference, Immunisation and Protection 48
4.5.7 Electromagnetic Compatibility 49
4.5.8 CBI Equipment 49
4.5.9 Multiple Installations 49
4.5.10 Trackside location cases 50
4.5.11 Relay Rooms 50
4.5.12 Electro Static Protection 50
4.5.13 Sound Levels 50
5 Testing of CBI System 50
5.1 Programme of Works 50
5.2 Design Review 51
5.3 Configuration Management and Version Control 52
5.4 Inspection and Testing 52
5.4.1 CBI System Tests 52
5.4.2 Testing of Equipment 53
5.4.3 Site Testing 54
5.4.4 General Tests 55
5.4.5 Soak Testing 55
5.4.6 Commissioning 56
6 CBI Safety Validation and Type Approval 56
6.1 Fail Safe Operation 56
6.2 Verification and Validation 56
6.2.1 Software Validation 56
6.2.2 Hardware Validation 57
6.2.3 Validation of Design Changes 58
6.2.4 Provision of Documentation for Validation 58
6.2.5 Validation Review 58
6.2.6 Insufficient Proof of Safety 59
Appendix A Information to be provided by Suppliers 60
Appendix B Items deliverable prior to submission of designs for review 65
Appendix C Items deliverable prior to commencement of testing 66
Appendix D Items deliverable prior to commissioning 67
Appendix E Items deliverable prior to practical completion 69
Appendix F Items to be specified in the Particular Specification 70

Superseded by T HR SC 00719 SP v1.0, 29/03/2017

1 Scope

1.1 Intent of Specification

This Specification covers the operation, design, application, supply, installation, testing, commissioning and performance requirements for a Computer Based Interlocking (CBI) system as a part of a railway signalling system, on the RailCorp's network.

This Specification also sets out requirements for the maintainer's terminal and event recorder used to quickly identify failures of the CBI system. Design System and Simulator requirements are specified along with performance requirements for reliability and maintainability for the CBI system. The last section covers the safety validation and type approval of the CBI system.

1.2 Definitions

Where possible the definitions for the purposes of this Specification are in Australian Standards Quality Assurance standards including AS61508 *Functional safety: safety-related systems (Part 4)*.

The definitions given below apply for the purposes of this Specification and override all other definitions.

Code Inspection by Third Party This is the inspection of software programs with vital functions by an independent expert. This method permits the detection of software errors.

Common Mode Failure Analysis A safety function is often assured by using several redundant elements. This method consists of a systematic analysis of all possible common failures of the redundant elements, in order to detect those, which will prevent the system from reaching a safe state. It is used for hardware exclusively.

Computer Based Interlocking (CBI) system The diagram below specifies the limits of a CBI system. It includes all equipment between the operator interface and the field equipment. It also includes systems and equipment required by the CBI equipment for it to operate in the specified railway environment. Examples of this include lightning and surge protection equipment and special power supply arrangements such as a no-break supply changeover.

The Operator Interface boundary is defined as the physical connection point available to the operator interface to directly communicate to the CBI equipment without further protocol conversion.

The trackside interface is at the connection point between the CBI field equipment and the outgoing cables to the associated external signalling equipment. Any interface relays and/or lightning protection equipment, which may be used by the CBI system to connect to field equipment are treated as a part of the CBI system.

Any power supply equipment such as UPSs, batteries and battery chargers which are required by the CBI system to maintain correct operation during power supply changeovers to alternate supplies (back-up supply or motor generator) are defined as being a part of the CBI system.

Superseded by T HR SC 00719 SP v1.0, 29/03/2017

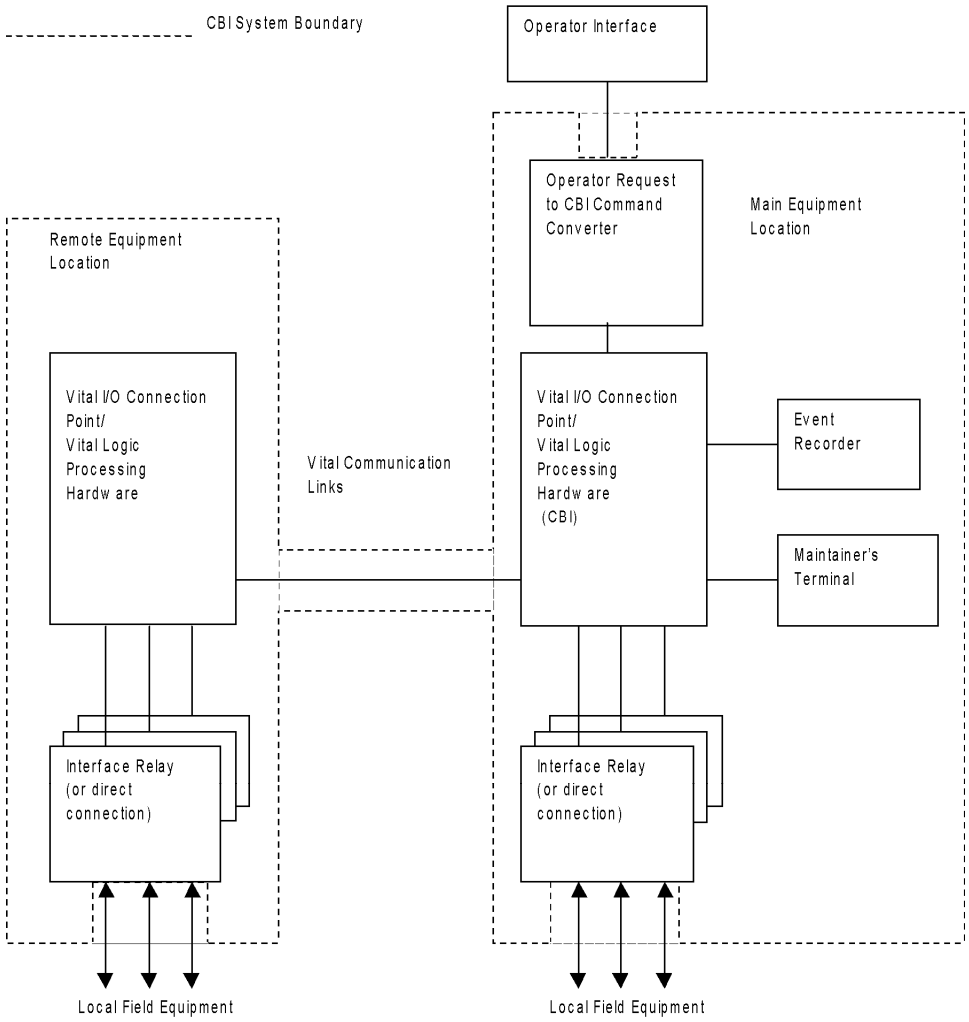

Consumables Consumables are defined as any item that is designed to be partially or completely used under system operating conditions or which have elements that are consumed at a certain rate during the operational lifetime of the equipment. This includes any item, which does not have a guaranteed lifetime in excess of two (2) years under the conditions of usage expected of the CBI system. Such items as fuses, lamps, printer paper, ribbons, inks and some items of lightning protection equipment are considered to be consumables.

Corrective Maintenance The unscheduled actions accomplished, as a result of failure, to restore a CBI system to a specified level of performance.

Defensive Programming The corruption of the data and instructions is prevented by using programming principles that limit the consequences of a fault: e.g. plausibility tests of the input and output variables, management of stack by the operating system, full performance of all cases of branching etc.

Design Life The design life of a CBI system is the operational life of the system as a part of a railway signalling system such that it still meets the requirements for operational performance, reliability and maintenance. If the signalling maintainers cannot obtain spare parts to maintain the CBI system, then the system is deemed to be life expired. If the CBI system is failing to meet the reliability and operational requirements then the system is deemed to be life expired.

Superseded by T HR SC 00719 SP v1.0, 29/03/2017

Fail safe The capability of an item of equipment or system to ensure that any failure in a predictable or specified mode will result only in that item or system reaching and remaining in a safe condition". *(AS 4292.4)*

Failure Modes, Effect and Criticality Analysis (FMECA) Failure Modes Effect Analysis is a systematic study in order to establish the consequences for safety of well defined failures during various operating states of the system. The method permits to establish the potential dangers that result from failures and to design the proper measures that will reduce their effects or their probability of occurrence. If faults and defects are considered in addition to failures, the method is called FMECA: Failure Modes, Effect and Criticality Analysis.

Fault Tree Analysis (FTA) FTA is a deductive method, which permits, starting from an unwanted event, to establish all the possible causes of that event and eventually to determine its probability of occurrence. The method consists in combining (AND, OR) internal failures with external influences. So one will have to consider situations, which occur due to a combination of several failures or faults. The method is usually applied to hardware in order to establish the overall system safety.

Formal Specification Language with Mathematical Proof A method which allows one to prove the correctness (no contradiction) of a program without having to test it (mathematical proof). It eliminates ambiguous specifications but it is difficult to use for specifying CBI system functions.

Free Testing In a normal test procedure, the different test cases are generated systematically. Free testing is a method by which the test cases are generated at random, in order to make sure that all cases have been considered. The what if? method is commonly used to generate test cases at random.

Full Testing For hardware, the method consists of an exhaustive testing of all simple failures before the system leaves the plant. For a software program, the method consists of passing through every branch of the program at least once.

Functional Testing This is the only way to assure that the specification is correct with respect to the function the system has to fulfil. Functional testing can be done by using the target hardware in a simulated environment. The method applies to CBI system hardware and software as well as overall system operation.

Hazard Analysis Review This method consists of an analysis of the risks that result when using a technical system, in order to identify them and to determine the functions required to protect the system against these risks.Risk = amount of damage x probability of occurrence

The hazard analysis is carried out at a system level.

High Level Language Any symbolic programming language which is close to the human language and easy to read. Strongly typed languages can detect type inconsistencies at compile time or by limited run time checking with the code generated by the compiler.

Interlocking Area An area of signalling which is under control of the CBI system or CBI sub-system. Only one of many examples is if the track between two crossing loops is controlled by intermediate signals and the two crossing loops and intermediate signals are controlled by a CBI system then both crossing loops and the area in between is regarded as one interlocking area.

Internal Boundary When more than one CBI system or CBI sub-system is required to operate an interlocking area, then the interface point between the signalling area covered by each CBI system or sub-system is an internal boundary.

Superseded by T HR SC 00719 SP v1.0, 29/03/2017

Machine Code Tested on Target Hardware The CBI system software is tested on the actual CBI system hardware in a real environment (or accurately simulated environment).

Magnetic media Computer disk or CD-ROM that is compatible with the Microsoft Windows® product range and IBM® compatible Personal Computers.

Maintainer's Terminal Normally used by the signalling maintainer for CBI system monitoring, fault-finding, diagnostics, event record examination, routine testing, vital blocking of signals, points and routes and the application of temporary controls.

Module This is a unit of electronic equipment which form a part of the CBI system. It can normally be replaced by signalling maintainers in the field.

Non Vital Non vital refers to any item of equipment involved in the operation of a signalling system whose failure in any state will not cause a reduction in safety of the signalling system.

Operator Organisation responsible for operating rolling stock on the RailCorp owned rail network.

Particular Specification The Particular Specification is the requirements for a particular re-signalling contract. It contains specifications for the function and form of the signalling system for the contract of which the CBI system is a part.

Preventative Maintenance The scheduled actions accomplished to retain the CBI system at the specified level of performance by providing systematic inspection, detection, and/or prevention of impending failures

RailCorp Representative A person, company or authority nominated by RailCorp to make engineering determinations on RailCorp's behalf in relation to the CBI systems and associated equipment.

Railway Signalling Principles These are the basic tenets of RailCorp upon which the signalling design procedures and practices are based. They include requirements for checking of operation, overlap protection and maintenance, and locking between signals and points. See RailCorp *Specifications ESG 100 Signalling Design Principles* and *SDG 0001 Signal Circuit Design Standards.*

Signalling Maintainer Personnel of the organisation who has a agreement to carry out maintenance activities of the signalling system upon the RailCorp rail network

Signalling Object Items of vital signalling field equipment controlled by the CBI system,

A signalling object is:

a) a running signal (inclusive of all routes and route indicators)

b) a signal 'A' light

c) a subsidiary shunt signal (inclusive of all routes and route indicators)

d) a separate ground shunt signal (inclusive of all routes and route indicators)

e) a power worked points turnout or crossover

f) a ground frame releasing switch

g) a level crossing warning system

h) a trainstop

Superseded by T HR SC 00719 SP v1.0, 29/03/2017

i) an ATP transponder

j) an interface relay to another interlocking

Signalling System This is the entire signalling system which includes: CBI system, train control system, signalling operator interface, signalling field equipment (e.g. track circuits and signals) and associated equipment.

Simulation Simulation may be applied to hardware and to system. Electrical circuit simulation may be used to investigate certain faulty behaviour. Simulation of the system configuration and operating environment may be used for testing purposes.

Site-Specific Data This is the designed and programmed data specific to the particular layout and signalling system where the CBI system is to be installed. It conforms generally to the information in the particular control tables and circuits for a conventional interlocking. All site-specific data is produced for the specific requirements of each installation and is subject to analysis checking and functional testing before going into service. Equivalent terms for site-specific data are Application Software or Geographic data.

Static Software Analysis The method is used to determine the structural complexity of a program in order to optimise the effort for validation.

Several program analysis are possible in a static mode:

a) flow chart analysis

b) semantic analysis

c) compliance of the produced code with the specification

d) cross-reference tables of variables

Static/Dynamic Compliance with the Specification In a static comparison, all test results are first produced and then compared with expected results. In a dynamic comparison the test results are continuously compared with the expected results during the test.

Structured Programming Rules The restriction of some dangerous programming practices was necessary in assembler language. The correct program structure is automatically tested by modern high-level language compilers (e.g. Pascal, Ada, Modula, C).

However it could prove useful to restrict the instruction set for safety systems and to design special compilers. The search for unused variables or procedures should be mandatory for such compilers.

Supplier The organisation responsible for the supply of CBI equipment and/or complete CBI systems. The Supplier depending on the contract may only supply the CBI equipment or may supply, install, test and commission a CBI system.

System Software (CBI) This is the software program common to the CBI system for various installations. It provides the underlying safety logic to meet the RailCorp Signalling Principles for all required applications. It is produced in accordance with quality procedures for safety software development and documentation. The software is independently validated and verified. All changes to the software are under configuration management and are undertaken to the same, or superior standards as the original development. System Software is also known as Vital Logic Software or Executive Software.

Superseded by T HR SC 00719 SP v1.0, 29/03/2017

Tables for Calculating Residual Risks MTBWSF: Mean Time Between Wrong Side Failure calculations are based on tables for reliability of electronic components in different configurations: e.g. MIL HDBK 217E.

Trackside Communications Bearer The physical communication links. This may be either metallic cable, coaxial cable or fibre-optic cable. If the cable is carrying vital information, suitable error correction and other security methods will be used to ensure error free transmission of data messages.

Type Approval Consideration of form, fit and function under specified conditions as to its suitability for use on the RailCorp network. The general type approval process is described in RailCorp *Specification SPG 0710 Type Approval Requirements for Signalling Systems and Equipment.* The additional type approval requirements for CBI systems are specified in RailCorp *Specification SPG 0719 Computer-Based Interlocking Requirements.*

Validated Compilers A validation process has been carried out on the compiler program to ensure compliance with safety and functional requirements.

Validation Confirmation by examination and provision of objective evidence that the particular requirements for a specific intended use are fulfilled. Validation means the process of demonstrating that the CBI system under consideration, and after installation, meets in all respects the safety requirements specification for that CBI system. Therefore, for example, Software Validation means confirming by examination and provision of objective evidence that the CBI system software satisfies the Software Safety Requirements Specification. *(AS61508).*

Validation involves the consideration of whether the specification of the CBI system sufficiently and accurately represents the requirements of the intended user.

Verification Confirmation by examination and provision of objective evidence that the specified requirements have been fulfilled. Verification means the process of demonstrating for each phase of the product development, by analysis and/or tests, that, for the specific inputs, the deliverables meet in all respects the objectives and requirements set for the specific phase. *(AS61508).*

Vital Vital refers to any item associated with the safe operation of the signalling system. A vital item by its design and testing and maintenance will only fail in predetermined states. This characteristic is used to ensure that the signalling system goes to a safe, more restrictive state rather than less restrictive state when a failure occurs.

Vital Blocking A vital inhibit to the setting of routes or to the moving of points.

Vital Communications Vital communications refers to any data transfer between CBI equipment concerning the detection of signalling object states, operation of signalling objects, CBI system inputs and outputs, where this information is used for the safe running of trains. Vital communications is integral with the CBI system and shall be developed using the same or better standards used to develop the CBI system. The software and hardware shall provide error free transfer of information between CBI systems and sub systems.

White-Box Test A white-box test of a program implies that the source code is known to the tester, this is in opposition to a black-box test, where the tester only knows the input/output values. Hardware is usually tested in this way, and this is also true for the test of individual software modules.

Wrong Side Failure A Wrong Side Failure is any failure of a computer based interlocking system, which endangers or has the potential to endanger the safe passage of trains.

Superseded by T HR SC 00719 SP v1.0, 29/03/2017

The failure is considered as potentially dangerous if it is not detected and protected by other parts of the CBI system and if it could result in one or more of the following:

a) Display of a signalling indication less restrictive than the proper one.

b) Release of points when they should be held locked

c) Other incorrect operation of interlocking.

d) Failure of active level crossing protection to operate for a train.

1.3 Abbreviations

Where abbreviations are used in this Specification, the following words are to be taken as being referenced by the abbreviation.

AC	Alternating Current
BRB	British Railways Board
CBI	Computer Based Interlocking
DC	Direct Current
IEC	International Electrotechnical Commission
ISO	International Standards Organisation
IP	International Protection – a coding system to indicate the degrees of protection provided by an enclosure against access to hazardous parts, ingress of solid foreign objects, ingress of water.
MTBF	Mean Time Between Failure
PCB	Printed Circuit Board
PROM	Programmable Read Only Memory
RailCorp	Rail Corporation of New South Wales
TDM	Time Division Multiplexing
VDU	Video Display Unit

1.4 Copyright and Licensing

The vesting of intellectual property in RailCorp or the licensing of use of intellectual property by RailCorp shall be in strict conformity with the conditions of contract.

Notwithstanding the generality of the foregoing, the Supplier shall provide RailCorp with the following documents and a licence to reproduce the documents for use by RailCorp or its representatives in the operation and maintenance of the system:

a) Manuals complete for the as built system.

b) Special documents as per the Particular Specification.

c) Special circuit drawings and equipment drawings produced specifically for the contract.

The Supplier shall license RailCorp to reproduce, copy, amend or in any way deal with the software and site-specific data developed with the Design System and the Simulator. This licence shall be limited to usage by RailCorp or its Representatives in connection with the operation, maintenance and modification of the CBI system.

The Supplier shall license RailCorp to reproduce, copy, amend or in any way deal with the design and software of the maintainer's terminal, event recorder and any equipment

Superseded by T HR SC 00719 SP v1.0, 29/03/2017

or system related to it performing its function. This licence shall be limited to usage by RailCorp or its Representatives in connection with the operation, maintenance and modification of the CBI system.

The Supplier shall license RailCorp to reproduce, copy, amend or in any other way deal with the text and drawings of the training course notes, course presentation materials, operator's manuals, maintenance manuals and the document set listed in Section 3.16. This licence shall be limited to usage by RailCorp or its Representatives in connection with the operation, maintenance and modification of the CBI system.

1.5 Company Confidential Documents

This Specification calls for the provision of copies of documentation in support of the contract works. For the documents listed in the accepted Supplier offer and the documents provided as part of the validation, the RailCorp Representative will enter into an appropriate non-disclosure agreement.

2 Applicable Documents

The CBI system shall be designed in conformance with the following documents:

a) Track plans produced to standard RailCorp Design (RailCorp Specifications SPG 0703 Documentation and Drawings and SPG 0713 Signalling and Control Systems).

b) Control tables produced to standard RailCorp Design (RailCorp Specifications SPG 0703 Documentation and Drawings and SPG 0713 Signalling and Control Systems).

c) Particular Specification for the project.

Referenced standards include RailCorp specifications for signalling as well as Australian/International Standards as listed below.

2.1 Referenced Specifications and Standards

The following RailCorp specifications and national/international specifications are referenced. The CBI system Supplier is to ensure that they are using the current versions.

RailCorp specifications

ESG 002	*General Signalling System Performance*
ESG 100	*Signalling Design Principles*
SPG 1009	*Standard Requirements for Signalling Electronic Systems*
ESG 0004	*Signalling Operator Interface*
SPG 0703	*Documentation and Drawings*
SPG 0705	*Construction of Cable Route & Associated Civil Works*
SPG 0706	*Trackside Equipment Installation*
SPG 0708	*Small Buildings and Location Cases*
SPG 0710	*Type Approval Requirements for Signalling Systems and Equipment*
SPG 0711	*Inspection, Testing, Installation and Commissioning Requirements for Safety Assurance of New And Altered Works*

Superseded by T HR SC 00719 SP v1.0, 29/03/2017

SPG 0712	*Lightning and Surge Protection*
SPG 0713	*Signalling and Control Systems*
SPG 0729	*Signalling Power Systems*
SPG 1031	*General Requirements for Labelling of Signalling Equipment*
SPG 1056	*Relays Plug-In Vital Miniature*

Australian/International Standards

AS61508	*Functional safety of Electrical/Electronic/Programmable Electronic Saftery-Related Systems Parts 1-7.*
AS 1768	*Lightning Protection*
AS 60529	*Degrees of protection provided by enclosures (IP Code)*
AS 2107	*Acoustics – Recommended design sound levels and reverberation times for building interiors*
AS 2834	*Computer accommodation*
AS 3000	*Electrical installations – Buildings, structures and premises (known as the SAA Wiring Rules)*
AS/NZS 4251.1	*Electromagnetic compatibility – Generic emission standard – Residential, commercial and light industry*
AS 4292.1	*Railway safety management – General and interstate requirements*
AS 4292.4	*Railway safety management – Signalling and telecommunications systems and equipment*
AS 4292.5	*Railway safety management – Operational systems*
AS/NZS ISO 8402	*Quality management and quality assurance – Vocabulary*
AS/NZS ISO 9001	*Quality systems – Model for quality assurance in design, development, production, installation and servicing*
AS/NZS ISO 9002	*Quality systems – Model for quality assurance in production, installation and servicing*
AS/NZS ISO 9003	*Quality systems – Model for quality assurance in final inspection and test*
AS/NZS ISO 9004.1	*Quality management and quality system elements – Guidelines*
ISO 10007	*Quality management – Guidelines for configuration management*

Reference Standards

US Military Handbook MIL-HDBK-217E or F Reliability Prediction of Electronic Equipment

3 Requirements

3.1 Fitness for Purpose

The standard of design, materials, and workmanship shall ensure that the installed CBI system is fit for purpose over the expected life of the system in its physical and operational environment, achieving not only the functionality requirements but also the standards of safety, reliability, durability, maintainability, operability and supportability as set out in this Specification and referenced documents.

The quality of design and materials and workmanship shall also ensure that the necessity for regular preventative maintenance tasks to retain the safety, availability and useability of the system over its lifetime is minimised.

Superseded by T HR SC 00719 SP v1.0, 29/03/2017

3.2 Quality Standards

The Supplier shall undertake all aspects of the CBI project in accordance with all of the quality standards listed in Section 2.1. The Supplier shall submit a Project Quality Plan to the RailCorp Representative. (see Section 5.3, for details of the Project Configuration Management Plan which is also required to be submitted).

3.3 Standards

The introduction of new technology for safety CBI systems requires adherence to stringent standards for design and development. These standards stipulate processes for CBI system equipment design, verification and validation.

3.3.1 Design Standards

The CBI equipment and system development shall have been undertaken in accordance with a documented set of requirements. The following standards are accepted by RailCorp as suitable for these requirements.

a) AS61508 - Functional safety: safety-related systems.

b) All CBI systems are required to meet System Integrity Level (SIL) 4 (four).

c) Where the design was carried out prior to the issue AS61508 *Functional safety: safety-related systems.*, then the design process shall have been carried out and documented to an equivalent degree, in accordance with the standards current at the time. The suitability of these standards will be assessed by the CBI Safety Validation and Type Approval (see Section 6).

3.3.2 Design Changes (to CBI System)

The implementation of any changes in the CBI system design shall be in a manner so as not to compromise any aspect of system safety or integrity.

Each and every change to any aspect of the CBI system design, hardware or software shall be verified and validated to at least the same level as the original validated design and to the most current version of *AS61508 Functional safety: safety-related systems*.

3.3.3 Supplier Manufacturing and Repair Standards

All components, modules and parts forming the CBI system shall be manufactured in accordance with Australian Standards relevant to the item of equipment or production activity. In particular all equipment shall comply with electrical safety standards and standards for toxic hazards due to fire and combustion.

If the system does not comply with relevant Australian Standards but is manufactured overseas then it shall be manufactured to a recognised equivalent standard. Any major differences between the overseas and the Australian Standards shall be brought to the attention of the RailCorp Representative. Where the equipment is to be manufactured or assembled in Australia then not withstanding the above it shall be manufactured to Australian Standards relevant to the item of equipment or production activity.

All CBI equipment supplied, shall be manufactured by an organisation with a Quality Management System which is certified to ISO 9002. Alternatively, the manufacturing organisation shall have in operation a fully documented Quality Management System, which complies with all requirements of ISO 9002.

Superseded by T HR SC 00719 SP v1.0, 29/03/2017

All CBI equipment, shall be repaired by an organisation with a Quality Management System which is certified to ISO 9002. Alternatively, the repair organisation shall have in operation a fully documented Quality Management System, which complies with all requirements of ISO 9002. The repair organisation (if different from the Supplier) must be authorised to conduct repairs of the CBI equipment.

RailCorp shall be permitted to conduct audits of the Quality Management System at any time prior to contract award or during the contract on the Supplier or any Sub-Supplier, manufacturer or repairer.

This section shall apply to all organisations involved in the manufacturing, assembly or repair of any part of the CBI system.

The manufacture, assembly or repair of any part of the CBI equipment shall be undertaken strictly in accordance with the schedule of organisations detailed in the accepted Supplier offer. No substitution of the nominated organisation by alternate organisations is permitted without the prior permission of the RailCorp Representative.

3.4 Year 2000 – Compliance

All CBI systems (hardware & software) including the maintainer's terminal, event recorder, remote access facility and test equipment shall be year 2000 compliant. All CBI equipment and systems shall recognise the date and operate correctly in the year 2000 and shall continue to operate according to the requirements of this Specification in the year 2000 and for the design life of the CBI system.

3.5 CBI System Design Life

Traditional railway signalling equipment has been designed for an extended design life in excess of 25 years. It is required that the CBI system shall have an operational life of at least 20 years. The CBI system shall achieve or exceed the requirements of this Specification (operational, reliability and maintainability) for the duration of at least 20 years. The Supplier is to provide evidence to the RailCorp Representative that the CBI system being offered will achieve at least 20 years of operation.

3.6 System Software (CBI)

The CBI system software (defined in Section 1.2) shall be fixed and invariable, and independent of application dependent requirements incorporated into the site-specific data. This CBI system software is reviewed as part of the CBI safety validation and type approval (see Section 6).

3.7 Safety

The CBI system shall operate the signalling system safely and protect against wrong side failures.

All signalling objects controlled by the CBI system shall be checked in the CBI system to see that there is proper control of the signalling object available. Checking shall be done routinely to ensure that there are no incorrect voltages on the signalling object outputs.

The CBI system shall provide the correct outputs based on the provided inputs. Checks shall be made to ensure that it is possible to drive all outputs to the safer or more restrictive state if required. If the CBI system has a failure of an output then the CBI shall drive that output to the more restrictive state.

Superseded by T HR SC 00719 SP v1.0, 29/03/2017

All signalling object inputs shall be continuously checked to confirm that they can return to the safer or more restrictive state.

3.7.1 Previous Operational Use and Safety

The CBI system offered shall have been fully commissioned, at two (2) or more sites and in normal service on a major railway for at least two (2) years.

The CBI system shall have been specifically designed as a fail safe, reliable system for the operation of railway signalling equipment. The CBI system shall have been designed and constructed to a documented quality standard or plan that includes independent verification of all design and testing activities. All safety aspects of the system shall have been fully validated and the validation fully documented. A group that is independent of the designers of the CBI system shall have undertaken the validation process.

The Supplier shall advise the release status of the CBI system offered. This shall include advice of whether the system offered is the latest standard product, or is due to be superseded or discontinued by the Supplier.

3.7.2 Diversity

Where the CBI system features software diversity, the software programs shall differ sufficiently to provide complete protection against corruption of either program, data or hardware.

The CBI system output process shall continuously compare the outputs from the separate software paths and shall only provide controls to signalling equipment where these outputs conform in the manner determined for the software diversity.

Where the CBI system uses a single software program with algorithms for checking of the processing of data, these processes shall cover all possible common mode failures of hardware and system software and protect against corruption of data. The CBI system offered shall continuously check the processing of data and the communication of messages.

3.7.3 Security

The safety and integrity of the CBI system is dependent on the site-specific data and the system configuration at the time of testing and commissioning. The system shall incorporate functions and features to ensure that the original integrity of the system cannot be compromised. The system shall provide fail-safe operation for any instance where action is taken to change small parts of the hardware or software without obeying the full configuration management procedures.

The Supplier shall provide procedures for checking cards or modules in the field. All field replaceable modules shall have module coding using software encoding or coding pins or equivalent means to prevent the insertion or operation of incorrect modules.

If the configuration of field modules is required then this configuration shall not form part of the field replaceable module but must be part of the CBI system. All configuration setting (such as links or switches) shall be part of the CBI system wiring or module housings and shall be fully documented. It shall be possible to swap common field modules without requiring changes to the CBI system configuration.

3.7.4 Degradation of Software

The system shall incorporate security and checking functions to ensure that the vital system software and site-specific data has not altered over time or due to external

Superseded by T HR SC 00719 SP v1.0, 29/03/2017

influences. This security shall involve checking the full data contents of all storage devices at regular intervals. External influences include system faults and operator manipulation. The Supplier shall provide documented procedures for changing system software or site-specific data. This shall include quality procedures for identification and version control of data and data storage devices.

3.7.5 Security of Site-Specific Data

The system shall incorporate security and checking functions to ensure that only site-specific data that is applicable to the site can be operated at a particular site. These functions shall also ensure that data on communications lines to field stations, control centres or other systems is protected and that incorrect data is detected and rejected.

3.7.6 Wrong Side Failure Performance

The calculated Mean Time Between Wrong Side Failures (MTBWSF) for each controlled signalling object for component failure in the CBI system shall be not less than 1,000,000 years. This is to be assessed from the MTBF of the system components, the system configuration and failure modes. The US Military Handbook MIL-HDBK-217, issues E and F, for ground fixed equipment or equivalent is to be used for these calculations.

The MTBWSF for each controlled signalling object shall be determined by the combined MTBWSF for each interlocking processor involved in controlling the signalling object. The MTBWSF figures for each controlled signalling object are to be included with the report to the RailCorp Representative prior to acceptance of the proposed system configuration.

3.7.7 Occupational Health and Safety

All equipment shall comply with electrical safety standards and standards for toxic hazards due to fire and combustion. All maintenance and operation procedures for the CBI system shall comply with the current NSW Occupational Health and Safety requirements.

3.7.8 Edges and Projections

Equipment shall be designed to minimise the risk of injury to personnel from accidental contact. It should be free of sharp edges and projections, and all corners should be rounded.

3.7.9 Equipment Weights

The weight of any module that may require replacement in the course of normal maintenance or repairs, shall be kept to a limit which will not pose the threat of strain or injury to the signalling maintainers.

3.7.10 Maintenance Access

Equipment heights, layout and positioning shall provide convenient access for monitoring, access and repair by signalling maintainers.

Equipment modules that may require replacement in the course of normal maintenance or repairs shall be designed such that they can be removed or installed easily, quickly and conveniently by one person.

Superseded by T HR SC 00719 SP v1.0, 29/03/2017

3.7.11 Labelling

All CBI equipment containing safety related circuitry, hardware or software shall be clearly labelled as such identifying that it is not to be altered or repaired by unauthorised personnel. Labelling shall comply with the requirements of RailCorp *Specification SPG 1031 General Requirements for Labelling of Signalling Equipment.*

3.8 CBI System Configuration

The design of the CBI system shall be such as to not impose any limit on the overall size of a signalling installation. Where the installation exceeds the capacity of a basic system, it shall be practical to extend it to provide all the facilities required.

The CBI system shall be capable of being expanded or reduced in size with minimal difficulty. The CBI system shall be capable of being expanded or reduced in size easily without having to reallocate all of the sub-system components and re-arrange all of the site-specific data due to the addition or removal of a few sub-system components.

The addition of extra interlocking processors and/or extra signalling object control modules shall not limit the functionality or performance of the CBI system and shall not compromise the integrity, safety or security of the CBI system.

At the time of submitting the system equipment configuration for approval by the RailCorp Representative, the Supplier shall provide full details of what is required to expand the system.

3.9 Interfaces to CBI System

The CBI equipment shall interface and function correctly the different types of signalling equipment and systems used by RailCorp.

The Supplier shall specify and shall produce the necessary procedures and practices for connecting the CBI system to RailCorp's existing signalling systems and signalling equipment.

3.9.1 Contact Resistance

CBI systems, which use low voltages for monitoring external interfaces, place additional reliance on needing low contact resistances for the external interfaces. The Supplier shall ensure that the CBI system will function correctly with the RailCorp signalling equipment being used. This signalling equipment may not be new and may have fairly high contact resistances for the switching contacts. The Supplier is responsible for all modifications or enhancements required if the CBI system is not functioning correctly due to the contact resistances of the external switching contacts.

3.9.2 Signalling interface circuits

It is a requirement of the Supplier to make the RailCorp Representative aware of limitations or restrictions when connecting the CBI system to the RailCorp signalling equipment and signalling circuits. The Supplier shall produce properly documented procedures for the CBI system which cover installation, testing, commissioning and maintenance.

Superseded by T HR SC 00719 SP v1.0, 29/03/2017

3.9.3 Input of Signalling Equipment Indications

The CBI equipment shall accept vital inputs from the signalling equipment. This equipment includes but is not limited to: signals, track circuits, point detectors, train stops, releasing switches, signalling relays and other signalling functions.

The CBI system shall have the ability to incorporate a one-second delay on pickup for track circuit inputs. This one-second delay on pickup shall be incorporated into the site-specific data for the CBI system if the delay is not incorporated into the track circuit equipment.

3.9.4 Relay Interface Requirement

The CBI equipment shall be able to electrically interface with the signalling equipment with the minimal use of vital signalling relays. This interface shall be compatible with the voltage levels and power levels of the equipment used by RailCorp.

Vital signalling relays shall be used to interface the CBI system to the signalling functions if required. These relays shall be directly driven from the relevant CBI system output. Intermediate power supplies (this includes transformers & rectifiers) are not permitted between the CBI system outputs and vital signalling relays. The Supplier shall submit typical circuits for these interfaces for approval by the RailCorp Representative.

All vital CBI interface signalling relays used on the RailCorp signalling system shall be manufactured to BRB specifications for vital signalling relays. The vital interface signalling relay shall comply with RailCorp *Specification SPG 1056 Relays Plug-In Vital Miniature*. All vital signalling relays shall use RailCorp type approved bases and connection methods. Only in exceptional circumstances will other relays be considered.

The Supplier shall install back emf (electromotive force) protection on all relays (including those not connected to the CBI system) which require back emf protection to ensure proper noise suppression and reliable operation of the CBI system.

3.9.5 Interface to Adjacent Signalling Systems

The CBI system shall provide inputs and outputs for interfacing to signalling equipment at adjacent signalling sections. These adjacent sections may have relay based interlocking or CBI systems of the same type or of a different type.

3.9.6 Operator Interface

The CBI system shall interface to the operator interface as specified in the Particular Specification and RailCorp *Specification ESG 0004 Signalling Operator Interface*. The performance requirements shall meet all the requirements of RailCorp *Specification ESG 0002 General Signalling System Performance*.

3.9.7 Level Crossings

The CBI system may be required to control the equipment for active railway level crossings. It shall operate the lifting barriers or gates, flashing lights and bells that form a railway level crossing. The operation of this equipment shall be in accordance with RailCorp's design principles for level crossings as detailed in RailCorp *Specifications SPG 0713 Signalling and Control Systems*, and *ESG 100 Signalling Design Principles.*

Requirements for level crossing protection if required will be detailed in the control tables and the Particular Specification.

Superseded by T HR SC 00719 SP v1.0, 29/03/2017

3.9.8 Points/Turnouts

The controlling of points/turnouts shall be non storage in operation. That is the positioning of a set of points shall be made, either by a route or a direct calling of the points and this shall be a once only action. If the points are unable to respond or are locked, then the call to the points shall fail and shall not be stored or applied a second time automatically, by the CBI system.

The CBI system shall operate the various types of point machine mechanisms used by RailCorp.

Generally these point machines are powered from 120 volt 50 Hz single phase supplies. However some 110 volt DC operated points machines (existing units) may also require control by the CBI system. It is preferred that no relay interface to these point machines be used. If a relay is used then it shall be directly driven from the relevant CBI system output. Intermediate power supplies (this includes transformers & rectifiers) are not permitted between the CBI system output and the points relay.

3.9.9 Signals

It is preferable for the signal lamp outputs to be 110-120V AC. Low voltage 12V DC outputs place constraints on cable size and limit cable run length (due to voltage drop).

Lamp Proving The system shall provide lamp proving for incandescent lamps and LED (Light Emitting Diode) lamps as described in RailCorp *Specifications SPG 0713 Signalling and Control Systems, ESG 100 Signalling Design Principles* and the control tables.

Flashing & Pulsating lamps If required by the Particular Specification and the control tables then the CBI system shall be able to provide flashing and pulsating lamps to meet the requirements of the RailCorp specifications.

The CBI system shall operate pulsating indications for single light medium aspects. These indications and duty cycles shall be in accordance with RailCorp *Specification SPG 0713 Signalling and Control Systems*. This aspect may be provided by the CBI system or external equipment.

The use of pulsating indications shall not inhibit the effectiveness or reliability of the lamp proving function.

3.9.10 Track Circuits

A number of different technologies are used for track circuit equipment. It is the responsibility of the Supplier to ensure that the track circuit equipment can be used with the CBI system. The Supplier shall consider issues such as noise immunity from high voltage pulse tracks. The Supplier shall ensure that the design and installation of the CBI system will operate reliably with the track circuit equipment being used.

3.9.11 Vital Communications Links

The safety aspects of any vital information passed over communications links shall be as follows:

Vital communications links shall be designed so that interference cannot cause a reduction in the safety of the CBI system. Vital communications links that do not provide protection against foreseeable misuse and maintenance activities shall not be accepted for use on links through general telecommunications systems.

Superseded by T HR SC 00719 SP v1.0, 29/03/2017

RailCorp has a preference for a unique address for each vital communications link installed in NSW, which utilises general communications systems.

The vital communications link used to pass vital information shall be designed for a probability of an undetected bit error in a message of less than 1×10^{-49} for a link with a bit error rate of 1×10^{-4}.

Communication Link Bit Error Rate Requirements Various standard communication bearers are acceptable for the provision of the vital transmission link. Communications links provided for vital information shall be tested for a bit error rate of 1×10^{-7} or better for the entire link prior to acceptance. This test on the communications link shall include any modems, modulators or interface adaptors used to connect the CBI system to another part of the CBI system over the communications link.

Duplicated Communication Link Requirements Where dual/duplicated communications links are provided for redundancy it shall be possible to isolate each component or connector of each communications link without affecting the other link. For example it is not permissible to use a common connector for both communications links as they enter a CBI location as it is therefore not possible to disconnect one communications link without also disconnecting the other link at the same time.

Noise Immunity The railway environment is subject to electrical noise generated by high voltage installations, electric traction both AC and DC, locomotive radio communications systems, lightning and signalling equipment, impulse track circuits and other mains surges. The vital communication links used for the CBI equipment shall provide immunity against the noise generated by these conditions and must operate reliably.

Optic Fibre Any communications links, which use optic fibre shall use equipment designed for the railway environment. All equipment such as patch boxes, optic fibre modems, connectors etc shall be designed for the environmental conditions specified in this document.

The Supplier shall satisfy the RailCorp Representative that the optic fibre system will provide the performance and reliability required so that the CBI system as a whole meets the required performance and reliability requirements.

3.9.12 Power Supplies

The normal power supply available for signalling equipment is 120 volts 50 Hz. The supply is between +10% and -10% of rated voltage and with +2% frequency variation on 50 Hz. See RailCorp *Specification SPG 0729 Signalling Power Systems*. The normal power supply is subject to traction harmonics and noise of up to 5% Total Harmonic Distortion (voltage THD).

Previously supplied CBI systems have failed due to electrical noise on the normal power supply. The Supplier is responsible for ensuring that the CBI system/equipment supplied will operate correctly with the power supply being offered by RailCorp. The Supplier may have to arrange for testing (at the Suppliers cost) of the proposed power supplies to confirm that it is suitable for the CBI system/equipment being offered. If it is found that the CBI system/equipment is not operating correctly due to noise on the power supply then the Supplier shall modify at their expense the CBI system/equipment and/or the power supply so that the CBI system/equipment will operate correctly and reliably with the supply offered by RailCorp.

In metropolitan areas the 120V 50Hz supply is derived from dual independent mains sources, with automatic changeover between main and standby supplies; this changeover can be up to 1 (one) second in duration using conventional Emergency Changeover Contactors (ECOs).

Superseded by T HR SC 00719 SP v1.0, 29/03/2017

In designated high traffic areas (high traffic areas are defined in Section 4.3.4) **no** re-setting of routes or approach locking timeouts shall be required when the CBI system experiences an automatic power supply changeover of up to 1 (one) second as described above. If the CBI system cannot sustain a break in supply of 1 (one) second then the Supplier (at no cost to RailCorp) is responsible for modifying the power supply system to ensure that the CBI system does not require re-setting of routes or approach timeouts when an automatic power supply changeover occurs.

Where only one mains supply is available, standby is provided by a diesel motor alternator set with automatic starting; standby power in this case is available within one minute of the loss of main supply.

The Supplier shall fully document, and describe the failure modes and impacts of any functions affected by power supply and shall include a full technical solution to minimise disruptions.

Power Supplies for CBI Equipment The CBI equipment shall operate from the AC mains supply which is described above.

Trackside locations shall be supplied at a nominal 120 volts AC power derived from the main and standby arrangements detailed above. Trackside control equipment shall operate from this supply. The operation of trackside control equipment shall not suffer any effect from momentary losses of power up to 1 second in duration due to mains changeovers or other similar events. If the supplied equipment is affected by momentary loss of power than the Supplier shall modify the supplied CBI equipment or modify the power supply arrangements (at no cost to RailCorp) so that the trackside CBI equipment is unaffected by momentary losses of power of up to 1 second.

Where the back up power supply is a motor generator set (generally only country areas with low traffic), the CBI equipment shall recover to normal operation within 60 seconds of the restoration of supply without manual intervention.

Where the back up power supply is a motor generator set the Supplier shall provide a No-Break power supply for CBI systems at these locations, which will handle interruptions of 1 minute without disrupting the operation of the CBI equipment.

Some Motor Generator sets do not necessarily output a noise free sine wave voltage. Additional equipment may be needed to allow operation with CBI equipment. This additional equipment shall be supplied by the CBI system Supplier at no cost to RailCorp.

Voltage Levels The CBI equipment should not require a power supply in excess of RailCorp's normal signalling supply voltage of 120 volts AC.

All necessary precautions shall be taken to avoid accidental contact between personnel and supply voltages, including the provision of separate cases around high voltage parts, and the shrouding of all terminals.

All equipment housings shall be earthed to main or subsidiary earth bus bars and earthing shall conform to RailCorp *Specification SPG 0712 Lightning and Surge Protection*.

If 240V operated equipment is used than it shall fully comply with the following requirements:

a) The 240 volts supply shall be wired in full compliance to *AS 3000 Electrical Installations - Buildings*, *Structures and Premises* known as the SAA wiring rules. It shall enter the housing in conduit, and terminate in standard double General Purpose Outlets.

Superseded by T HR SC 00719 SP v1.0, 29/03/2017

b) The power supply units shall be fully-enclosed units, provided with either a three-core flexible lead or an IEC mains socket (male) and lead. In either case the lead shall be provided with a 3-pin mains plug, for connection to the GPO.

c) Any functional module designed to be operated directly from the 240 volts supply shall be fully enclosed and be provided with a lead and plug for mains connection. Each such unit shall be provided with its own switched GPO outlet.

d) Each 240 volt GPO and 240-volt direct-supplied unit shall bear a label clearly identifying it as such.

The Supplier of the 240V CBI equipment shall ensure that the CBI system is not exposed to external surges via the 240V power supply and equipment. The Supplier shall also ensure that the CBI system operational availability is not affected by the failure of the 240V supply. The 240V supply does not have a backup alternate supply.

3.10 Alterations to Signalling Layout

The CBI system shall be designed to permit alterations to accommodate subsequent changes in the layout or signalling of the interlocking area. Changes in equipment shall be accomplished by the addition or removal of the necessary modules or cards. Site-specific data shall be arranged to permit signalling changes without affecting the vital system software.

RailCorp or its design Representatives (separate from the Supplier) shall be able to implement alterations to the site-specific data made necessary by interlocking or geographical (track work) changes.

These changes shall not require computer programming skills on the part of RailCorp's design Representatives, but shall be accomplished by the use of the design/simulation systems and configuration systems provided by the Supplier.

3.11 Design System

RailCorp will be provided with the hardware, software, documentation and licence to design and implement site-specific data independent of the Supplier

A type approved Design System shall be provided to allow RailCorp or its design Representatives to design, modify and check the site-specific data for the CBI system. The Design System shall be type approved as a part of the CBI system type approval.

The Design System shall provide the facilities for the programming, verification and validation of the site-specific data for any particular installation.

The Supplier shall provide all hardware and software required for the efficient generation of any new site-specific data or alterations to existing site-specific data by RailCorp or its design Representatives. These tasks will be performed by engineers competent in signalling circuit design but who do not have specific computer software engineering skills. Simple data entry format is preferred to enable ease of understanding by RailCorp or its design Representatives.

The Supplier shall provide all manuals and training required for RailCorp or its design Representatives to operate and maintain the Design System.

The Supplier shall provide a Design System with a hard disk and back-up facility and printer to enable copies to be made of the site-specific data for testing and archive purposes.

Superseded by T HR SC 00719 SP v1.0, 29/03/2017

If RailCorp already has access to a Design System independent of the Supplier that is suitable and fully compatible with the particular CBI system being offered, then an additional Design System may not be required; if not required the Particular Specification will explicitly specify that it is not required.

3.11.1 Design System - Data Preparation Software

The Supplier shall provide data preparation software for the Design System to permit the generation of site-specific data in a format suitable for the CBI system. The Supplier shall provide documented procedures and practices for the use of data preparation software and for the generation of site-specific data.

The data preparation software and procedures shall ensure that the site-specific data produced (including PROMs if used) is correct. The Design System, its data preparation software and the procedures and practices shall provide checks against operator or system error. The data preparation software should incorporate syntax checking of data at the input stage and checking in the compiling stage. This checking should catch data faults such as double allocations, incorrect names and allocation errors. Procedures and checks of data are required for any final site-specific data to ensure the data is not corrupted.

Where the CBI system uses multiple interlocking units or multiple processors to cover the required area, the Supplier shall ensure that these internal boundaries have no adverse effect on the operation of the signalling system. The Supplier shall provide design manuals detailing the design rules for these internal boundaries.

RailCorp has a strong preference for the design of site-specific data to be as simple and logical as possible. It would be desirable to be able to extract site-specific data directly from the control tables and track plans and enter this into the system.

This Design System shall accommodate all data requirements to meet RailCorp's signalling principles and practices detailed in RailCorp *Specifications SPG 0713 Signalling and Control Systems*, *ESG 100 Signalling Design Principles* and *SDG 0001 Signalling Circuit Design Standards*.

RailCorp may accept alternate means of entry of site-specific data. These may be by ladder logic diagrams, Boolean expressions or custom notation and machine code. The Supplier shall be permitted to use these alternate methods only to the extent that they have been documented in the Supplier's accepted Supplier offer. The Supplier shall provide Design Procedures and Work Instructions fully detailing the data entry method of the accepted Supplier offer.

3.11.2 Generation of Site-Specific Data

The Design System shall permit the generation of site-specific data in accordance with the following requirements:

The generation of site-specific data for CBI systems shall be in accordance with a fully documented procedure.

The checking of site-specific data shall be methodical in its approach, providing full error detection. It shall include syntax and semantic checking.

The Supplier shall provide a Design System with version control and system security. It shall be possible to design unlimited numbers of site-specific data for different areas on the one Design System. The Design System shall provide difference lists to assist in the checking of the integrity of design alterations.

Superseded by T HR SC 00719 SP v1.0, 29/03/2017

The compilation of the final site-specific data for installation on the CBI system shall be a verifiable and validated process.

3.11.3 Site-Specific Data

The Supplier shall provide full documentation of any site-specific data procedures for any intermediate steps between analysis of the control tables/track plans and entry into the Design System. All such data shall be considered as part of controlled documents for the site-specific data design and be under configuration management.

3.12 Simulator

RailCorp shall be provided with the hardware, software, documentation and licence to simulate and test site-specific data independent of the Supplier.

A type approved Simulator shall be provided to allow RailCorp or its design Representatives to simulate and test the site-specific data for the CBI system. The Simulator shall be type approved as a part of the CBI system type approval.

For CBI systems in high and medium traffic area as designated in Section 4.3.4, the Simulator shall be used in an office environment away from the actual site. The Simulator shall be a vital system including equipment and software to permit full vital function testing of the site-specific data against the control tables and the signalling design principles. The Simulator shall fully emulate all internal processes (including but not limited to data processing paths, system timers, output arbitration, delay lines, communications interfaces and cycle times) of the target CBI system that the site-specific data is going to be used on.

A non vital Simulator is acceptable only as an aid to checking site-specific data and is not acceptable as a type approved Simulator.

The Simulator equipment and software used shall have been independently verified and validated with supporting documentation that it operates strictly in conformance with the actual CBI system and site-specific data. If the Simulator equipment is identical to the equipment of the target CBI system and it uses the same vital system software as the target CBI system, then the validation of these systems will be accepted as validation of the Simulator.

Where the proposed CBI system will use multiple sub systems and each of these has unique site-specific data, it is permissible to test each set of site-specific data independently of the others. In these cases the Simulator shall provide the means to simulate and manipulate and monitor the interface between adjoining sets of CBI systems.

The Simulator shall permit all functions on the control tables to be tested. The Simulator shall permit the tester to manipulate the states of track circuits, point detection, train stops, releasing switches and all other external inputs. The Simulator shall permit the simulation of operation of signalling equipment, which would be connected to the target CBI system in its final configuration. This shall include signal aspects responding to the setting of routes, point detectors responding to setting of points, train stops responding to signals clearing, releasing switches responding to the giving of a release and other indications responding to output controls as appropriate for the specific signalling design.

The Simulator provided shall consist of a VDU to display controls and indications together with a keyboard, mouse or trackball or other device for the input of commands. The VDU shall show a track layout and shall display the state of all indications and controls.

Superseded by T HR SC 00719 SP v1.0, 29/03/2017

If RailCorp already has access to a Simulator independent of the Supplier that is suitable and fully compatible with the particular CBI system being offered, then an additional Simulator may not be required; if not required the Particular Specification will explicitly specify that it is not required.

See Section 5.4.1 for details on the testing of site-specific data.

3.13 Maintainer's Terminal

A maintainer's terminal shall be provided to allow access to the system by signalling maintainers. It shall be connected directly to the CBI system or via standard data communications links from a remote location.

The maintainer's terminal shall comply with the requirements of RailCorp *Specification SPG 0731 Standard Requirements for Signalling Electronic Systems* as well as the requirements specified herein.

3.13.1 Description

The maintainer's terminal shall include VDU, keyboard, printer and any processor and equipment needed to perform the required tasks. The maintainer's terminal shall either be a rugged portable unit designed to plug into any CBI system or sub system or else a central unit with a connection to each CBI system. The location of the maintainer's terminals and any additional maintainer's terminals will be detailed in the Particular Specification.

The maintainer's terminal shall incorporate diagnostic functions to enable rapid identification and isolation of any faulty unit, module or PCB within the CBI system. The maintainer's terminal and the CBI system shall provide full alarm reporting with transmission of appropriate alarms to the signalling operator interface system. All alarms shall be unambiguous in their description.

3.13.2 Requirements

Failure of the maintainer's terminal to operate correctly shall be counted as a Category 5 failure of the CBI system (see Section 4.3.5). Failure of the maintainer's terminal shall not inhibit the operation of the CBI system from the signaller's or train operator's perspective.

The terminal shall provide control and monitoring functions, to enable the maintainer to monitor and interrogate the CBI system.

The terminal shall provide at least the following features:

a) Display of all CBI system faults and alarms

b) Display of faults with communications links, operator interface and power supplies

c) Maintainer's self diagnostics

d) Vital blocking

3.14 Vital Blocking Facilities

Vital blocking facilities shall be provided for both the signaller and the maintainer. These facilities shall be independent, and the use of these facilities by either party shall have no effect on blocks applied by the other party. Neither shall be able to clear a block applied

Superseded by T HR SC 00719 SP v1.0, 29/03/2017

by the other. Blocking facilities shall be consistent with the RailCorp *Specification ESG 100 Signalling Design Principles*.

The signaller shall have vital blocking facilities for all block sections, which are covered by the CBI system. The signaller shall also be able to apply non-vital blocks to all routes and points via the operator interface as detailed in RailCorp *Specification ESG 0004 Signalling Operator Interface*.

The maintainer shall be able to vitally block routes and points as part of the CBI system. The purpose of these blocks is to book items of signalling equipment out of use, or to protect personnel during maintenance activities.

Vital blocks may be applied to sections of track, particular routes, or points. In the case of sections, the railway track layout is divided into nominated track sections based on the signalling layout and operational requirements. Then if a vital block is applied to the section, no signals may be cleared into the section but signals leading out of the section may be cleared.

When the CBI system commences operation (this includes all system restarts), the vital blocks that were in-place when the CBI system ceased operating shall be maintained or all vital blocks shall be applied. The signaller and maintainer will then check and remove any inappropriate blocks.

3.15 Event Recorder

The CBI system event recorder supplied shall be type approved by RailCorp (or its Representatives) in accordance with this Specification. The event recorder shall comply with the requirements of RailCorp *Specification SPG 0731 Standard Requirements for Signalling Electronic Systems* as well as the requirements specified herein.

Each CBI system shall have event recording incorporated. The event recorder may be incorporated into the maintainer's terminal. If this is not done then a standalone event recorder shall be provided (preferably PC based) or the event recorder could be part of the operator interface.

The event recorder is an important diagnostic tool for analysing CBI equipment failures and examining past operational events. The event recorder shall operate reliably and shall not interfere with the operation of the CBI system. Failure of the event recorder to operate correctly shall be counted as a Category 5 failure of the CBI system (see Section 4.3.5). Failure of the event recorder shall not inhibit the operation of the CBI system from the signaller's or train operator's perspective.

The Supplier of the CBI system shall provide facilities either as a part of the event recorder or via a separate personal computer to view record files, select required records and generate reports to the PC hard disk and print reports.

3.15.1 Requirements

The event recorder shall have the following minimum requirements:

a) Record all changes to all inputs and all outputs of the CBI system to a time resolution of 1 second or less. Each record entry shall have a date stamp (day/month/year) and a time stamp (hh:mm:ss) for each record entry. The time clock of the event recorder shall be automatically synchronised with the CBI system time clock.

Superseded by T HR SC 00719 SP v1.0, 29/03/2017

b) There shall be separate record files for manageable geographic regions of the CBI system. Every record file shall include a reference to the site-specific data name.

c) Maintain at a minimum, the last 30 days of recorded changes.

d) Records shall be stored on 'non-volatile' media e.g. hard drive.

e) An operator shall be able to copy a record file to removable magnetic media (preferably a 3½" 1.44Mb floppy disk). Copying a record file to the removable media shall not interrupt the normal recording of events. If the record file cannot be fitted onto a single 1.44Mb floppy disk than the Supplier shall provide a higher capacity removable magnetic media device.

f) The event recorder shall record in the record file when the event recorder starts and stops recording with a full date and time stamp. All CBI system alarms or warning messages shall be recorded with a full date and time stamp.

g) Security features (e.g. 6 digit password) should be incorporated to stop unauthorised access and deletion of record files.

h) Facilities shall be provided to allow remote access via modem to download record files to the remote access facility. It shall not take longer than 10 minutes to download at least 1 hours worth of event records from the event recorder. Security features (e.g. 6 digit password) shall be incorporated to stop unauthorised remote access.

i) The event recorder shall automatically restart and begin recording after the mains power is applied to the event recorder. The event recorder shall operate correctly and continue recording if the mains supply to the event recorder fails for up to 15 minutes.

3.15.2 Remote access facility

The Supplier shall provide one remote access facility for every CBI system installation (the Particular Specification may specify more than one). This facility shall allow the signalling maintainer to remotely connect to the CBI system event recorder and download record files. This facility shall allow the signalling maintainer to examine, print and search the downloaded record files.

The Supplier shall provide the personal computer (or equivalent), modem, dial up telephone connection, communications software and record analysing and reporting software. The Particular Specification will nominate the location where the remote access facility is to be located. The Supplier shall provide all testing, documentation and training for the event recorder remote access facilities.

3.16 Documentation

The Supplier shall provide complete documentation covering the use, maintenance and operation of all equipment and systems that are supplied.

The documentation shall be fit for purpose and facilitate operation and maintenance including inspection, testing, fault finding, modification, repair and replacement.

This documentation shall be in the form of manuals and supporting drawings and photographs. The manuals shall be divided into logical sections relating to the module type/function, the level of detail provided in the manual and that to be performed. There shall be separate manuals for at least the following items:

Superseded by T HR SC 00719 SP v1.0, 29/03/2017

a) Signalling Design and Data Preparation

b) System Configuration Design and Interfacing

c) First Line Maintenance Manual

d) Workshop Maintenance Manual

e) Operation of Field Equipment

f) Operation of Office Equipment

g) Quality Management Procedures

h) Test equipment user manuals and testing procedures

Together these manuals and documents are the document set for the CBI system installation.

This documentation is in addition to the course notes provided for training purposes. The first line maintenance manual and operation manuals must be provided prior to the running of training courses.

The Supplier shall provide the number of document sets laid down in the Particular Specification. If not stated in the Particular Specification the Supplier shall provide as a minimum one controlled document set and three uncontrolled document sets. The document sets shall contain the manuals listed above.

The document set shall be specific to the equipment and the installation provided for RailCorp and shall not be generic manuals or documents. The document set shall be provided 30 days prior to the commencement of CBI system site testing. The RailCorp Representative will nominate the custodian of the controlled document set. A draft of the document set shall be submitted to the RailCorp Representative at least 90 days prior to the commencement of CBI system site testing for approval. The document set shall be updated by the Supplier to reflect any changes resulting from actions during testing or commissioning. This updating shall be completed not later than 30 days after the CBI system is commissioned into operational use.

The Supplier shall provide complete as built drawings and documentation of the CBI system. This documentation shall be in accordance with the requirements of RailCorp *Specification SPG 0703 Documentation and Drawings.*

3.16.1 English Language

This CBI system will be operated and maintained by personnel whose only working language is English in its common Australian form and usage.

All documents provided shall be written in plain English.

All technical terms used in any documentation shall be those commonly used by RailCorp and its Representatives; or else the manuals and training notes shall provide a comprehensive glossary of terms.

Superseded by T HR SC 00719 SP v1.0, 29/03/2017

4 Performance

4.1 Operation of CBI System and Signalling Equipment

The operation of the CBI system shall be in accordance with current RailCorp signalling methodology and RailCorp *Specifications SPG 0713 Signalling and Control Systems* and *ESG 100 Signalling Design Principles.*

The CBI system shall maintain the appearance and behaviour of current RailCorp signalling schemes, so far as the railway signallers and train crew personnel are concerned, and therefore be designed to:

a) operate with signalling operator interfaces

b) interface with trackside signalling equipment

c) meet the requirements of the Particular Specification

This CBI system shall work according to the signalling design methodology in use by RailCorp and work with signalling equipment currently in use by RailCorp.

4.1.1 Diagnostics and Fault Reporting

The CBI system shall be designed to minimise `down time' resulting from any failure, by the provision of detailed alarm facilities, self-diagnostic routines and comprehensive fault reporting facilities.

The system shall automatically diagnose malfunctions and provide alarm indications and error reports to enable signalling maintainers to carry out all the requirements for first line maintenance, fault finding and rectification.

Diagnostic facilities shall enable equipment failures to be identified to within a plug-in module or circuit board.

Appropriate alarms shall be transmitted to the operator interface to facilitate maintenance attention and fault finding.

4.1.2 Operational Performance Response Times

The Supplier shall supply details of all safety critical time constraints for the validation review and the design review to the RailCorp Representative for every CBI system installation.

The operational response times shall meet the requirements of RailCorp Specifications, *ESG 100 Signalling Design Principles, SPG 0731 Standard Requirements for Signalling Electronic Systems* and *ESG 0002 General Signalling System Performance* as well as those specified herein. The Supplier shall submit full details, to the RailCorp Representative, of the performance time constraints involved in the following areas of the CBI system operation.

Areas of concern for operational response times include but are not limited to:

a) Approach locking controls

b) Swinging overlaps

c) Overlap controls (including sequentially setting of points in the overlap)

d) Auto Normalising of Signal Routes

Superseded by T HR SC 00719 SP v1.0, 29/03/2017

e) Route Locking Controls

f) Interfaces to external systems

Performance requirements for a CBI system, or a sub-system of a distributed CBI system, are as follows:

a) Minimum time an input has to be 'ON' before it is detected being 'ON' by the CBI is 0.5 second

b) Minimum time an input has to be 'OFF' before it is detected being 'OFF' by the CBI is 0.3 second

c) Maximum time an output which should not be on, may be incorrectly 'ON' (i.e. the maximum time an incorrect (unsafe) output would be on before the condition is detected and rendered safe by the CBI safety management systems) is 0.4 second

d) Maximum time for an output to change state as a direct result of an input changing state is 2 seconds

The Supplier shall provide details of the CBI system times relative to these performance requirements.

For a distributed CBI system the configuration and communications layout between sub-systems has a direct affect on the overall CBI system response times. The Supplier shall provide details of response times for the CBI system in the configuration being offered.

4.2 Availability

Availability is a performance indicator, which refers to the CBI system as a whole performing the required function. The CBI system and ancillaries shall be designed and configured to maximise availability of the signalling system.

The system shall be configured to contain the disruptive effects of failure to a minimum. e.g. configured to affect the least number of lines, configured to maximise availability of a crossover.

The level of availability shall be calculated using the levels of reliability and maintainability performance requirements specified herein.

Additional minimum configuration requirements and additional performance requirements for the CBI system may be detailed in the Particular Specification. The Supplier shall ensure that the CBI system will meet these additional availability performance requirements.

4.3 Reliability

4.3.1 Signalling System

The CBI equipment will form part of the signalling system. The CBI system is required to operate at a high level of availability to ensure the safe and on-time performance of trains using the RailCorp network.

4.3.2 System Configuration

The Supplier shall configure the CBI system to meet the reliability performance requirements detailed in this Specification. Additional minimum configuration

Superseded by T HR SC 00719 SP v1.0, 29/03/2017

requirements and additional performance requirements for the particular signalling site may be detailed in the Particular Specification. The system configuration shall also meet these additional requirements.

The Supplier shall provide information to substantiate that the proposed equipment and system configuration for the CBI system will meet the specified performance levels. This information shall take the form of actual data from systems in service. This data shall be from all systems in service or from two separate systems of size equal to or larger than the proposed system configuration. The data shall cover all service experience or an `in service' period of at least 2 years, for each of the referenced systems.

The data shall be presented with details of the referenced system configurations, a contact person and contact details from the railway where the system is installed, the method of gathering the data, and the standards used for compiling the resultant performance figures from the data.

The referenced systems should utilise the same equipment and system configuration as that proposed for this contract. Where the referenced equipment is a different model to that proposed, the Supplier shall provide full details of the differences and the effect these have on the performance data. Where the referenced system configuration is different from that of the proposed system, the Supplier shall provide sufficient details to substantiate that the data is relevant.

In addition to the in-service data the Supplier shall provide theoretical calculations of failures for the individual modules of CBI equipment and the system configuration. These calculations shall be in accordance with US Military Handbook MIL-HDBK-217, issues E and F, for ground fixed equipment or equivalent.

Using an appropriate mathematical model for the CBI system the relevant reliability and maintainability characteristics of the CBI system shall be predicted in terms of signalling object failures. The failure data for the model should be obtained from field data for similar systems. The aim of this model is to prove that the proposed CBI system will meet the requirements of this Specification for reliability and maintainability.

The Supplier shall provide assurance that the CBI system offered meets the reliability and maintainability requirements specified. Further to the requirements of this Specification the requirements for reliability and maintainability assurance shall be provided in accordance with *AS 3960-1992 "Guide to Reliability and Maintainability Program Management",* or an equivalent nationally or internationally recognised standard. Both observed and assessed characteristics are required in sufficient detail and explanation to satisfy the RailCorp Representative of the CBI systems reliability performance. All assumptions on which the assessments are based are to be stated and justified.

4.3.3 Reliability Estimation

If the Supplier does not provide sufficient information and data to substantiate compliance to the specified performance requirements, then they shall immediately alter the system configuration so as to meet the specified performance. The Supplier shall submit a new configuration in accordance with this section and shall submit all the data detailed above for this new configuration. This shall be submitted within 28 days of being notified by the RailCorp Representative that the original proposed configuration has not been substantiated to meet the specified performance.

The Supplier shall be responsible for all costs and delays which result from any actions required as a result of this Section.

In the event that the Supplier fails to provide a system configuration and data to substantiate its performance to the specified level, the Supplier shall be deemed to have defaulted in the performance of the contract.

Superseded by T HR SC 00719 SP v1.0, 29/03/2017

4.3.4 Traffic Density Classification

The CBI system will be operated continuously from the date of commissioning.

Higher reliability performance levels are required for higher traffic density areas. Three levels of traffic density are specified; high, medium and low traffic densities.

These 3 levels are applied in the following manner to the NSW railway network (see Table 1):

LOCATION	Traffic Density Classification
Sydney Metropolitan Area	
Bounded by Newcastle, Lithgow and Dapto	High
North	
Islington Junction to Maitland	High
Maitland to Casino	Medium
Casino to Brisbane	Medium
Casino to Murwillumbah	Low
Maitland Muswellbrook	Medium
Muswellbrook to Sandy Hollow	Low
Muswellbrook to Werris Creek	Medium
Werris Creek to Armidale	Low
All other branch lines	Low
West	
Lithgow to Wallerawang	High
Wallerawang to Baal Bone Junction	Medium
Wallerawang to Orange	Medium
Orange to Broken Hill	Medium
Orange to Dubbo	Low
Dubbo to Bourke	Low
All other branch lines	Low
South	
Macarthur to Goulburn	High
Goulburn to Yass Junction	High
Goulburn to Canberra	Low
Yass Junction to Junee	High
Junee to Albury	High
All other branch lines	Low
Illawarra	
Dapto to Bomaderry	Low

Table 1

These traffic density classifications are based on traffic frequency and type of traffic, which utilise the line.

The Particular Specification may specify higher or lower traffic densities than what is specified in the above table.

Superseded by T HR SC 00719 SP v1.0, 29/03/2017

4.3.5 Categories of Failure

The 3 levels of traffic density defined above (Table 1) are categorised to five categories of failure.

Failures of the CBI system are categorised generally in accordance with the level of failures of controlled signalling objects attributable to the failure in the CBI system:

Category 1

Failure of signalling objects in an interlocking area on more than three running lines, or failure of more than 50% of the signalling objects controlled by the CBI system or failure of more than 20 controlled signalling objects.

For medium and low traffic density levels, failures that would be covered by this category may be classified as Category 2 failures provided the CBI system recovers automatically and the failure period is less than thirty seconds.

Category 2

Failure of controlled signalling objects in an interlocking area on more than two running lines, or failure of more than 30% of the signalling objects controlled by the CBI system, or failure of more than 8 controlled signalling objects.

Category 3

Failure of more than one controlled signalling object in an interlocking area except where the failed signalling objects are all controlled from the one trackside control equipment location and are all either on the one line or apply to the one direction of traffic.

Category 4

Failure of one signalling object, or more than one signalling object where they are all controlled from the one trackside control equipment location and are all either on the one line or apply to the one direction of traffic.

Category 5

Any inability of the CBI system to output a correct control to a signalling object or output a correct indication from a signalling object to the operator interface. Also a failure in the CBI system affecting reliability, maintainability or operability.

For small interlockings in medium or low traffic density levels, failure may be considered as contained to categories, which are specified in the Particular Specification.

4.3.6 Determining the Category of Failure

For the purposes of determining the category of a failure of the CBI system the following shall apply.

a) A failure of a controlled signalling object in service (categories 1, 2, 3 & 4) shall be one directly attributable to an inherent failure (either random or systematic) of the CBI system and shall be such that it could result in a train being brought to an unintended stop or delayed for three minutes or more either directly at the site of the failed signalling object(s) or as a consequence of trains blocking back. It shall be assumed that there is a train in the area at the time of the failure.

Superseded by T HR SC 00719 SP v1.0, 29/03/2017

b) If a group of controlled signalling objects are simultaneously failed because of a failure in the CBI system, then any failed signalling object in the group, which would be so failed by the failure of one of the other failed signalling objects in the group, shall not be counted as a failed signalling object in determining the category of failure.

Table 1 stipulates the expected reliability performance for the CBI system.

Through the use of reliability block diagrams and US Military Handbook MIL-HDBK-217 E or F - *Reliability Prediction of Electronic Equipment,* the calculated performance predictions of the CBI system configuration offered shall be provided for each applicable cell in Table 1.

In Table 1, the reliability performance requirements are stated for each of the categories 1 to 4, as the number of years where there shall be a ninety percent (or higher) probability of not more than one CBI system failure of that category per controlled signalling object.

This shall be interpreted that if a CBI system controls N signalling objects (as defined) then there shall be at least a ninety percent probability of not more than one CBI system failure of that category in any period of Y divided by N years, where Y is the value in years shown in the table for that category of failure.

For category 5, the requirement is stated for each field replaceable unit within the CBI system as the number of years where there is a ninety percent (or higher) probability of not more than one failure.

A field replaceable unit is defined as a maintainable electronic item in the CBI system and shall be the smallest units of the CBI sub systems that, when the CBI system fails, can be identified, isolated and changed out or repaired by a signalling maintainer to restore the CBI system to normal operation within the corrective maintenance time to repair requirements (see section 4.4.3.2). Typically a field replaceable unit is a module, PCB card, VDU terminal unit, modem.

Assuming a Poisson distribution for failure occurrences, the 90% probability figures in Table 1 are approximately half (53.12%) of the Mean Time Between Failure figures for equipment with exponential reliability and constant instantaneous failure rate characteristics.

	Years for 90% probability of no more than one CBI system failure per controlled signalling object		
Failure Category	High Traffic	Medium Traffic	Low Traffic
1	Y = 1000 years	Y = 750 years	Y = 200 years
2	Y = 250 years	Y = 187 years	Y = 50 years
3	Y = 50 years	Y = 37 years	Y = 25 years
4	Y = 25 years	Y = 18 years	Y = 12 years
1+2+3+4	Y= 15 years	Y= 11 years	Y= 7 years
	Years for 90% probability of no more than one failure, for each field replaceable unit		
5	Y = 2 years	Y = 2 years	Y = 2 years

Table 2

Note: Each failure of the CBI system shall meet the reliability requirements for the lowest number failure category in which it will fit and also meet the reliability requirement for

Superseded by T HR SC 00719 SP v1.0, 29/03/2017

category 5. The aggregate of failures in categories 1 to 4 inclusive shall be less than the specified requirement in Table 2 above.

Note: If the CBI system is considered as made up of input, output and processing functions then failures of controlled signalling objects caused by failure of the CBI system may be traceable to:

a) Vital inputs not correctly delivered for processing due to failure in vital input functions.

b) Non-vital inputs not correctly delivered for processing due to failure in non-vital input functions.

c) Vital outputs not correctly delivered after processing due to failure in vital output functions.

d) Vital outputs not correctly delivered due to failure in processing functions, or shutdown.

Shutdowns and failures in processing functions are likely to be the most critical by causing a greater number of controlled signalling object failures per failure of the CBI system.

Failures of individual vital input functions are likely to be more critical than failures of individual vital output functions as an incorrect input delivered for processing could, because of the interlocking logic, result in a number of “failed” outputs to signalling objects.

Shutdown of all or part of the CBI system causing signalling object failures shall be counted as a failure of the CBI system and categorised accordingly unless it can be demonstrated that the shutdown was in accordance with the intended CBI system design and caused by undue interference, external to the CBI system, which exceeded the levels of protection and immunisation that are specified requirements for the CBI system under this Specification.

4.3.7 Reliability and Preventative Maintenance Monitoring

The CBI system reliability performance and maintenance activities shall be measured and recorded continuously, following commissioning into use of the signalling system, during the defects liability period.

The RailCorp Representative shall be provided with all information relating to any failures or scheduled preventative maintenance activities for the CBI system for 12 months after commissioning into operational use. Each failure will be categorised into a failure category based on the number of failed signalling objects and the traffic density classification (as specified in 4.3.4 Traffic Density Classification and 4.3.5 Categories of Failure). The RailCorp Representative shall be provided with the following information for every failure or scheduled preventative maintenance activity:

a) Time and location of failure

b) Time of arrival of signalling maintainer(s) on site

c) Symptom of failure

d) Effects of failure on CBI system operation (number of failed signalling objects)

e) Effects of the failure on other elements of the system

Superseded by T HR SC 00719 SP v1.0, 29/03/2017

f) The actual cause of the failure and the specific failure mode (what was repaired/repair reports)

g) Time of CBI system restoration

Enough data is required to determine what happened, how the failure occurred and why the failure occurred. The data shall be analysed by the RailCorp Representative to determine trends and weaknesses in the system.

The Supplier shall put in place the management systems and reporting systems to ensure that the RailCorp Representative has access to all of the required failure and maintenance information.

At 5 months and 11 months after commissioning a reliability and maintainability analysis report shall be prepared by the RailCorp Representative and a determination will be made to see if the reliability and maintainability (see 4.4.14) performance for the CBI system has been achieved.

The Final Certificate shall not be issued if the system fails to meet the specified performance levels for reliability or maintainability (see also 4.4.3 Maintainability Performance).

4.3.8 CBI System Upgrades and Modifications

In the situations where the reliability or maintainability of the CBI system or CBI sub-system has not met the specified requirements herein, the Supplier (at their cost) shall provide an upgrade/modification that will enhance the reliability and/or the maintainability of the CBI system so that it meets the specified performance requirement. In this case the defects liability period shall be extended to a date twelve months after the bringing into use of the upgraded/modified CBI system.

4.4 Maintenance

It is intended that RailCorp will be independent of the Supplier for the routine maintenance, signalling alterations, fault location and some workshop repairs, of the CBI system and ancillary equipment and will utilise the existing maintenance organisation.

The equipment will be maintained at two levels:

a) The signalling maintainer, who may have limited specialised electronic training, will be available at short notice. It shall be assumed that the signalling maintainer is only capable of interpreting straight forward `Go, No-Go' indications, from the operators control station, maintainer's terminal and system diagnostic indicators. The signalling maintainer shall be trained to perform simple, well defined tasks and to call for specialist assistance if a fault cannot be rectified by the performance of a defined procedure.

b) Specialist maintainers or engineers will be available, at longer notice.

4.4.1 Local Support

Supplier/manufacturer support for the system shall be available in Australia.

4.4.2 Safety Procedures

RailCorp requires that the safety and integrity of the CBI system should not be compromised by any possible maintenance activity including fault finding and corrective actions.

Superseded by T HR SC 00719 SP v1.0, 29/03/2017

The CBI system shall incorporate functions to ensure that the hardware and software configuration is maintained after any maintenance or fault finding procedure. The CBI system shall protect against the generation of wrong outputs or controls as a result of any maintenance activity. This activity may include testing and fault finding by the signalling maintainers.

It is preferred that there be minimal or no mandatory safety procedures for signalling maintainers. The Supplier shall fully document any mandatory procedures for signalling maintainers to ensure that the safety and integrity of the system is not compromised. These documents shall be issued to the RailCorp Representative for review during the validation review of the CBI system. The documents are to be included with the maintenance documentation and are to be covered as a part of the maintenance training courses.

4.4.3 Maintainability Performance

4.4.3.1 Preventative Maintenance

Preventative maintenance shall be either not required, or be less than:

a) 2 hours per year for the CBI system equipment

b) 4 hours per year for the CBI system surge protection

c) 2 hours per year for CBI system battery and power supply checks

4.4.3.2 Corrective Maintenance

For medium and high traffic density areas (defined in 4.3.4 Traffic Density Classification) the mean corrective maintenance time to repair a failure and restore normal operation shall not be more than 15 minutes; ninety-five percent (95%) of all repair tasks should be completed in less than 20 minutes.

For low traffic density areas (defined in 4.3.4 Traffic Density Classification) the mean corrective maintenance time to repair a failure and restore normal operation shall not be more than 20 minutes; ninety-five percent (95%) of all repair tasks should be completed in less than 30 minutes

The required corrective maintenance repair times do not include travelling time but do include fault identification once the signalling maintainer is on site. It is assumed that the repairers knowledge of the system is limited to that provided in the first line maintenance training course and that the maintainer only has access to spare parts, hand tools, a multimeter and any specialised test equipment issued to that signalling maintainer.

Repairs shall be performed by the replacement of plug-in components. All parts that can be expected to fail shall form part of accessible plug-in components. Repairs shall be performed according to documented and established procedures provided by the Supplier.

Failed unit identification and isolation shall be performed by built-in system test and diagnostic facilities for ninety five percent (95%) of all cases.

4.4.4 Modularity and Sub-Systems

To cater for this form of maintenance and diagnostics, compatible with comprehensive monitoring, the system shall be modular in design and construction with a minimal number of module types. Each module shall perform a major clearly defined function in the CBI system with each function clearly identifiable within the overall system.

Superseded by T HR SC 00719 SP v1.0, 29/03/2017

The modules shall combine together to form sub-systems which perform clearly defined tasks. These sub-systems may be manufactured on their own racks or assemblies. All equipment shall have plug and socket type connections and location studs to facilitate correct replacement.

Standard Modules

The equipment shall be designed so that modules or individual components may be replaced with their equivalents without degradation in the performance of the system, malfunction of the system or the need to make any adjustments to the equipment.

Where modules are available from more than one manufacturer, they shall be freely interchangeable within the system.

Sub-system Isolation

If system failures occur, it shall be possible to correct them by replacement of various modules. During this replacement activity, controls to affected signalling equipment shall default to a safe state. Signals shall show a stop aspect and points shall not be operated.

It is preferred that it should not be necessary to turn off the CBI system or part of the system and that the non-affected portions of the system operate in the normal manner, while a module or modules are being replaced. If this is not possible then only the CBI equipment at the specific location where the module is being replaced should be required to be turned off.

4.4.5 Recovery Times

Following the repair or replacement of a faulty module or PCB or sub-system the CBI system shall recover to full operation in the minimum of time. To achieve this, inbuilt testing functions and diagnostic routines shall provide the signalling maintainer with an indication that the CBI system is operating normally to permit them to certify the equipment back into revenue operation in the minimum of time.

All parts of the CBI system shall return to operational service within 60 seconds of their replacement or power on. It is preferred that all parts of the CBI system return to operational service within 30 seconds of their replacement or power on. The Supplier shall nominate all modules that take longer than 30 seconds to return to full operation after their replacement and include details of the module's function, MTBF and recovery time.

4.4.6 Training

The Supplier shall provide training courses at the required levels to the personnel nominated by RailCorp's Representative as part of the Contract. These courses shall be aimed and be suitable for the target audience.

The location of the course will be determined to reduce attendees travelling time and will normally be in Sydney, or in the Regional Offices, or at the area in which the equipment is being installed. The location will be determined by the RailCorp Representative.

Signalling Design Engineers

This course shall be suitable to train a signalling design engineer who has no training or experience in computer programming. The course shall provide this engineer with the necessary skills to be able to undertake the following tasks and functions:

Superseded by T HR SC 00719 SP v1.0, 29/03/2017

a) To prepare and enter signalling data direct from RailCorp's standard signalling control tables into the Design System. Alternatively, if the Design System uses Boolean expression or ladder logic then the course shall cover these methods to the same level.

b) To interpret this data to enable it to be checked against signalling design principles or to undertake amendments to the data.

c) To undertake a functional test of this data or any similar test utilising the Simulator.

d) To undertake system configuration, management, version control and designs for changes, amendments or extensions to the existing system or the configuration of the system design for new installations,

e) To use all the functions and features of the Design System and the Simulator.

f) To prepare and implement site-specific data modifications.

g) To prepare final site-specific data and install on working installations.

Signalling Technical Engineers

This course will be suitable to train an engineer who has knowledge of RailCorp's signalling system and qualifications in electrical engineering or computer systems engineering or computing. The course shall provide this engineer with the skills to be able to understand the function and operation of each and every module and PCB of the system and of the functioning of the software. This course shall provide the engineer with the skills to undertake the following tasks and functions:

a) To undertake detailed fault finding and maintenance of the CBI system.

b) To evaluate the effect of any new developments or equipment on the CBI system.

c) To evaluate and design the interfacing of the CBI system to RailCorp's signalling operator interfaces.

d) To evaluate and design the interfacing of the CBI system and equipment to other signalling equipment such as signals, point motors, ATP transponders etc.

Signalling Maintainers

This course shall be suitable to train a signalling maintainer who has a trades certificate in electronics or a railway signalling electrician who has experience in electronics, namely:- electronic track circuits, TDM systems or similar equipment. These signalling maintainers will be required to undertake first line fault finding and maintenance of CBI equipment.

The course shall provide these maintainers with the skills and knowledge to understand the function and operation of each module and the self diagnostic programs of the equipment and the use of test equipment and built in test points.

This course shall provide these signalling maintainers with the skills and knowledge to undertake the following tasks and functions:

a) First line fault finding of all equipment and module replacement

b) Regular maintenance of all equipment

Superseded by T HR SC 00719 SP v1.0, 29/03/2017

c) Installation, wiring and testing of the equipment

d) Commissioning the equipment into service

e) Use of test equipment, test sets etc.

f) Use of built in test points and correct method of testing

g) Quality management procedures relating to the maintenance, operation and integrity of the system.

Maintainers and Engineers Introductory Courses

A one day course suitable for all Signalling Maintainers and Engineering personnel shall be provided. It is preferred that this course be the common introduction to each of the above courses and be conducted for all attendees of the above courses jointly. The course will also be attended by personnel who require an initial understanding of the CBI system but who will not be attending any other courses.

This course should cover the following items:

a) System Description and Operation

b) Sub-systems

c) Interlocking equipment

d) Maintainer's Terminal

e) Communications

f) Trackside equipment modules/PCB

g) Introduction to Design Practices for CBI Schemes

h) Design Process

i) Location Circuit Design

j) Introduction to Site-specific Data Preparation

k) Design System

l) Testing and Commissioning

Conduct of Training Courses

The courses shall be conducted prior to the commissioning of the CBI system. The Supplier shall submit a copy of the syllabus for each course two weeks prior to the commencement of the first course. The syllabus shall be reviewed by the RailCorp Representative.

The Supplier shall submit one copy of the course notes for each course two weeks prior to the commencement of the respective courses. The course notes shall be reviewed by the RailCorp Representative.

All course notes provided shall accurately reflect the actual equipment and system configuration being provided to RailCorp by the Supplier. References to other equipment or configurations shall be limited to those instances where it aids the trainee in understanding the system and its operation.

Superseded by T HR SC 00719 SP v1.0, 29/03/2017

4.4.7 Fault Finding

The Supplier shall provide fault finding procedures which will enable a signalling maintainer to locate the correct cause of any fault in shortest possible time. The procedure shall be fully documented and fully explained in the training courses. These documents shall include flow charts for the signalling maintainers to follow during fault finding.

4.4.8 Spare Parts

The Supplier shall supply spare parts for the system to enable maintenance by RailCorp. The Supplier shall supply spares for all parts, card, modules, maintainable or field replaceable items or pieces of equipment in accordance with this Specification.

Quantities of Spares For individual cards, modules and maintainable items supplied by the Supplier, the following Table 3 lists the quantity of spare items required based on the number of times the item is used in the CBI system.

Number of times the individual item type appears in the overall system	Number of Spare Items Required
One item	Two
Two items	Three
Up to four items	Four
Up to eight items	Five
Up to sixteen items	Six
Up to thirty two items	Seven
For each set of 64 items or part thereof	Eight

Table 3

In determining the number of times an individual item appears in the overall system, this shall relate to exactly identical items only. If an item has strappings, settings or adjustments for different parts of the system, then each of these shall be considered as separate items.

Approval may be given by the RailCorp Representative in special circumstances to supply less spares when the module is either a standard module or evidence is supplied that the module is unlikely to fail.

All spares supplied shall be fully compatible with installed CBI equipment,

Spares as detailed in this Specification shall be supplied by the Supplier before the CBI system is commissioned. The supply of spares is a mandatory requirement.

Provision of Spares

All spare parts shall be clearly labelled and identified. The identification shall be consistent with the system manuals and drawings. The identification of the part shall be labelled on the exterior of the container. All spare parts shall be individually packaged (in antistatic bags if required) in cardboard containers and sealed against moisture or dust. The packaging shall protect the parts during transport and storage such that their storage

Superseded by T HR SC 00719 SP v1.0, 29/03/2017

life will be at least equal to the expected system life. Antistatic protective packaging shall be provided where applicable.

Spare parts for the CBI system shall be available from the Supplier for the duration of the CBI System design life specified herein.

Use of Spares

The spare parts shall be handed over to the RailCorp Representative as new unused items at the time of commissioning of the system. The full compliment of spare parts shall be provided at the time of commissioning of the system.

The Supplier may use the spare parts during the defects liability period but not prior to the commissioning of the equipment. On any occasion that the Supplier uses RailCorp's spare parts during the defects liability period the Supplier shall provide a replacement within 28 days of its use. The Supplier shall provide this replacement unit at no charge to RailCorp.

4.4.9 Consumables

Such items as fuses, lamps, printer paper, ribbons, inks and some items of lightning protection equipment are considered to be consumables. The Supplier shall provide sufficient consumables for two years of operation of the system. The Supplier shall replenish the stocks of consumables such that, at 12 months after commissioning, there is a minimum quantity of each equal to the usage in the first twelve months.

4.4.10 Test Equipment

Signalling Maintainer's equipment is limited to standard hand-tools and digital multimeters.

It is not intended that signalling maintainers will require oscilloscopes of any type, signal generators or similar equipment. If an oscilloscope, optic fibre power meter or other specific test equipment is required for maintenance than the Supplier shall provide as a minimum one set of the required test equipment to the RailCorp nominated signalling maintainers for the CBI system.

If the CBI system uses electronic devices which are susceptible to static electricity and those devices or modules require handling by signalling maintainers than the Supplier shall provide an antistatic field service kit.

Any additional test equipment or specialist tools required are to be detailed in the Supplier offer. The test equipment supplied by the Supplier shall meet the requirements of the RailCorp Representative conducting the type approval. The Supplier shall supply manuals and procedures for all the test equipment.

Any test equipment whose operation and use could affect the integrity of the CBI system shall be clearly labelled as such. The existence of such test equipment shall be brought to the attention of the RailCorp Representative.

4.4.11 Test Points

Appropriate test points shall be provided so that the system operation can be monitored under normal maintenance and fault conditions without affecting system performance or operation.

It is desirable that the following monitoring shall be possible:-

Superseded by T HR SC 00719 SP v1.0, 29/03/2017

a) Transmission levels - transmit and receive

b) Supply voltages

c) Any states or levels which are necessary for maintenance purposes

Details of test points shall be included in maintenance manuals. The levels at test points shall be recorded at the time of commissioning.

4.4.12 Test Sets

It is required that each and every module or PCB that forms part of the CBI system can be tested for its operational status. Test sets shall be provided that permit testing of each and every module that is used, including every version of these modules. The test set should be capable of providing a soak test mode.

A Go-No Go test set is required for the testing of each module as detailed above. This test set shall be provided for use by first line signalling maintainers. The test set shall be designed and manufactured to the same standards as the CBI equipment.

4.4.13 Maintainability Demonstration

A Maintainability Demonstration shall be conducted as a part of the system test and evaluation of the actual on site CBI system prior to commissioning the CBI system. The aim is to verify that qualitative and quantitative maintainability requirements have been achieved and to show the adequacy of training, spare parts, documentation, personnel and maintenance procedures.

The maintainability demonstration shall be conducted in an environment that simulates as closely as practical the operational environment after commissioning.

The Supplier is to prepare a maintainability demonstration plan which is to be submitted as a part of the Project Test Plan (see Section 5) to the RailCorp Representative for approval. The maintainability testing is to be done by simulating faults over the entire CBI system and observing the task times and resources required to correct the situation. At least 10 separate and different faults are to be simulated which cover all areas of the CBI system. The Supplier shall nominate 10 worst case scenarios for the demonstration.

The signalling maintainer selected for the demonstration shall be selected by agreement between the Supplier and the RailCorp Representative. The selected maintainer shall have been recently trained by the Supplier and cannot be an employee of the Supplier.

The maintainability demonstration for corrective maintenance will involve the following steps:

a) A failure is induced in the equipment without the knowledge of the signalling maintainer scheduled to perform the demonstration. No hints as to the type or location of the fault are to be given.

b) The signalling maintainer will be called to operationally check the CBI system. While following the checkout procedures a fault or malfunction will be detected.

c) Once a fault is detected the signalling maintainer will proceed to accomplish the necessary corrective maintenance tasks (e.g. fault finding, disassembly, removal, replace, repair and test). At each stage the signalling maintainer shall follow the documented maintenance procedures and use the proper test equipment. Obviously the parts used for the maintenance demonstration shall be compatible with the spares provided with the CBI system.

Superseded by T HR SC 00719 SP v1.0, 29/03/2017

d) While the signalling maintainer is completing the maintenance tasks a RailCorp Representative collects data on the tasks completed, time to complete tasks and areas of difficulty.

The start of the corrective maintenance repair time is when the signalling maintainer is called and arrives to operationally check the CBI system. The corrective maintenance task is completed when the system is fully operational and ready to operate with trains. Logistics delay times including travelling time are not included in the active corrective maintenance time.

The corrective maintenance time to repair the 10 simulated faults shall be checked against the performance requirements specified in Section 4.4.3.2.

If the corrective maintenance times of the 10 simulated faults do not meet the specified requirements of section 4.4.3.2) then the Supplier shall modify/enhance the CBI system, documentation, training, spares or maintenance procedures to achieve the specified requirements for corrective maintenance times. The RailCorp Representative may request another maintainability demonstration if they are not satisfied that the corrective measures implemented by the Supplier will meet the specified maintainability performance requirements.

4.4.14 Maintainability Monitoring

The RailCorp Representative will use the reliability data/failure information collected for the 5 month and 11 month reliability performance assessment (see Section 4.3.7) to analyse the mean corrective maintenance repair times for the CBI system and prepare a maintainability performance assessment. The Supplier shall modify/enhance the CBI system as required by Section 4.3.8 to achieve the required maintenance times for both corrective and preventative maintenance repair times as specified in Section 4.4.3.

4.4.15 Defects Liability Service

The Supplier shall provide defects liability service for the period laid down in the Particular Specification and Conditions of Contract. Any equipment which fails to perform during the defects liability period shall be repaired or replaced by the Supplier. The Supplier shall be responsible for the provision of all spare parts required for the defects liability service. RailCorp's stock of spares may be used in accordance with this Specification. The Supplier shall be responsible for undertaking all technical investigation and fault finding during the defects liability period to ensure the equipment performs to requirements. The Supplier shall provide all equipment required to undertake defects liability service.

RailCorp or its Representatives shall at its discretion undertake first line service to correct or replace equipment, which fails to perform. This work by RailCorp or its nominated Representatives shall not limit the responsibilities or duties of the Supplier.

The Supplier shall provide contact details for defects liability service following the day that the CBI system is commissioned into use. The Supplier shall have personnel available for defects liability service between 0800 and 1700 for each day of the liability period.

Supplier requirements for faults not repaired by RailCorp nominated Signalling Maintainers

Where the RailCorp nominated signalling maintainers are unable to rectify CBI system faults the Supplier shall provide the personnel to conduct the repairs required and return the CBI system to full operational use.

Superseded by T HR SC 00719 SP v1.0, 29/03/2017

All repairs shall be completed on site. This shall be by repair, replacement of a faulty module or replacement of the complete unit or system.

After arrival on site to service a fault there shall be continuous effort on site by suitably qualified personnel with all necessary spares, test equipment and documentation required to correct the fault.

There shall be an escalation of effort to correct the fault if it has not been rectified within eight hours. Escalation of effort shall include the introduction of specialist personnel on a full time basis.

RailCorp nominated signalling maintainers will provide details of the fault situation and details of any rectification already undertaken. The Supplier shall provide a report on their attendance to the fault within 15 days of attendance to the equipment. This report shall include the following:

a) Details of the fault reported

b) Date and time fault reported

c) Date and time Supplier's personnel arrived on site

d) Name of Supplier's personnel

e) Details of fault/faults found

f) Details of action taken to rectify fault/faults

g) Recommendations on corrective action to prevent a similar occurrence.

4.5 Environmental Performance Requirements

This section specifies the working environment in which the CBI system is required to operate. The specified interfaces include machine to ambient, machine to machine, and machine to human.

The CBI system shall operate reliably and continuously in the harsh railway environment of New South Wales. Systems or equipment designed to standard commercial or office requirements are not suitable for this environment.

The CBI equipment shall be designed and manufactured to operate in the environmental conditions experienced within the railway environment. The Supplier is responsible for ensuring that the individual items of equipment, field location housings, central control building, computer rooms and related equipment are integrated to ensure that this requirement is met. In particular the following conditions shall be addressed by the Supplier.

4.5.1 Temperature

The equipment and the equipment housings shall be designed to operate in the ambient temperature ranges found in New South Wales. The equipment and housings shall be designed to allow for the heat generated by the equipment and other equipment in the housings and for the solar energy that will be absorbed by the housing.

The lowest recorded ambient temperature in New South Wales is -22°C and the highest recorded is 50°C. The maximum relative humidity in New South Wales is 100%. Temperatures in metal apparatus location cases housing field equipment have been measured in excess of 65°C.

Superseded by T HR SC 00719 SP v1.0, 29/03/2017

The CBI field equipment shall maintain its guaranteed performance without the need for adjustment, in the above environment and at equipment temperatures between -10°C and +70°C.

If CBI equipment offered is rated for operating at a temperature lower than +70°C then the installer of the CBI equipment shall ensure that the temperature of the operating CBI equipment in the location where it is installed will not rise above the rated operating temperature of the CBI equipment. The installer shall add additional ventilation, air-conditioning or insulation and conduct temperature monitoring, as required, to ensure that the temperature does remain below the required maximum for the CBI equipment.

4.5.2 Relative Humidity

The equipment and the housings shall be designed to operate in relative humidities up to 100% non-condensing for field equipment and 90% non-condensing for office equipment.

4.5.3 Mechanical Shock and Vibration

The equipment and housings shall be designed to operate with the mechanical shock and vibration levels, which are present at the locations the equipment will be installed in.

4.5.4 Traction Interference

The equipment shall be immune from the effects of inductive interference from the traction system and from power supply harmonics. The current electrified network is 1500 volts DC with currents up to 6000A using 50Hz rectification systems. The traction system requirements will be detailed in the Particular Specification.

4.5.5 High Voltage Surges (including Lightning)

The equipment and earthing arrangements shall be designed not to sustain damage or degradation of system performance due to high voltage interference from lightning activity, power surges and inductive switching transients that may appear at the locations where the equipment is installed.

The equipment supplied shall be protected against power surges, transients and lightning in accordance with the requirements of Australian Standard AS 1768 *Lightning Protection* and RailCorp *Specification SPG 0712 Lightning and Surge Protection.*

The Supplier shall demonstrate to RailCorp's Representative that the CBI system including any associated communications, control or monitoring equipment as installed shall withstand the testing requirements of RailCorp *Specification SPG 0712 Lightning and Surge Protection.*

4.5.6 Electrical Interference, Immunisation and Protection

The system shall have been designed and installed to withstand damage and maintain reliable operation when subject to interference from 1500 volt DC and 25-0-25 kV AC traction systems and also from interference due to over voltages, transients, ripples and fault current levels on adjacent mains power lines, and effects of lightning and power surges.

Protection for the CBI system shall be provided if required, on the rest of the signalling system and power supplies, in accordance with RailCorp *Specification SPG 0712 Lightning and Surge Protection*.

Superseded by T HR SC 00719 SP v1.0, 29/03/2017

4.5.7 Electromagnetic Compatibility

The Supplier shall demonstrate to RailCorp's Representative that the system as installed does not exceed the limits of emission as specified in *AS 4251.1 Electromagnetic compatibility - Generic emission standard Part 1: Residential, commercial and light industry*.

The Supplier is responsible for ensuring that the system will not emit Electromagnetic Radiation at such a level as to affect existing systems or equipment at the particular installation site.

The Supplier shall demonstrate to RailCorp's Representative that the system as installed will pass the tests as specified in *AS 4252.1 Electromagnetic compatibility - Generic immunity standard Part 1: Residential, commercial and light industry*, including tests A1.2, A2.1, A2.2, and A4.5 listed in Annex A when configured and operating as intended in the final installation.

The Supplier is responsible for ensuring that the CBI system when operated correctly will not be affected by the electromagnetic radiation at the particular installation site such as hand held radios and mobile phones, including that produced by fault conditions on external equipment. The Supplier shall modify or enhance (at the Suppliers cost) the CBI system if it is found that electromagnetic radiation is affecting the correct operation of any part of the CBI system.

4.5.8 CBI Equipment

All equipment modules/cards, sub-systems, and other ancillary equipment shall be suitable for installation in non-air conditioned buildings or metal location case housings under the environmental conditions detailed in the Particular Specification and in accordance with the following requirements.

The location cases housing the equipment will normally be closed and locked for security reasons but the doors will be opened occasionally for maintenance purposes. The system shall be able to withstand the effects of direct sunlight and rain during the periods when these doors will be opened.

Location cases and rooms adjacent to the railway tracks will be subject to vibration and the ingress of fine particles of dust originating from train braking, exhaust fumes, track ballast, weed-killers, and general industrial pollution.

Trackside equipment shall be manufactured to withstand vibration and resist the entry of dust particles and moisture, and to maintain reliable operation under all environmental conditions.

All CBI equipment should be sealed to prevent the ingress of dust and other air borne solid contaminants. If the equipment is of the cardfile rack design then all printed circuit boards should be protected with a coating to prevent dust and moisture affecting the CBI equipment. All cardfile racks shall have covers to help prevent dust and other airborne solid contaminants entering the equipment.

4.5.9 Multiple Installations

If several cubicles or locations are necessary these shall be interconnected by external quality cables. The cubicles or racks shall be fitted with hinged doors. These cubicles or racks will normally be located in separate equipment rooms or trackside locations.

Superseded by T HR SC 00719 SP v1.0, 29/03/2017

4.5.10 Trackside location cases

The CBI equipment installed in trackside location cases shall be mounted in cubicles or racks rated to IP32 (see *AS 60529).*

The CBI equipment housed in trackside location cases shall be installed in location cases manufactured and installed to RailCorp *Specifications SPG 0705 Construction of Cable Route & Associated Civil Works* and *SPG 0708 Small Buildings and Location Cases*.

4.5.11 Relay Rooms

The CBI equipment installed in a walk in relay room shall be mounted in cubicles or racks rated to IP32 (see *AS 60529*).

4.5.12 Electro Static Protection

The CBI equipment shall be designed and protected against the effects of static charges. This is predominantly required when the handling and transportation of modules or PCBs is carried out.

The Supplier shall have a documented Quality Work Instruction which details requirements for packaging, storage and protection in sufficient detail to ensure the above requirements are satisfied.

4.5.13 Sound Levels

The audible noise created by the system shall comply with *AS 2107 Acoustics - Recommended design sound levels and reverberation times for building interiors*.

Areas that are intended for personnel to work in shall comply with the requirements for office building - general office areas.

Areas in buildings that are not intended for personnel to work in shall comply with the requirements for office buildings - computer rooms.

Track side locations and other areas that are not intended for personnel to work in shall comply with the requirements for industrial buildings - light machinery.

5 Testing of CBI System

The testing and certification for signalling system, CBI system and associated facilities shall meet the requirements of RailCorp *Specification SPG 0711 Inspection, Testing, Installation And Commissioning Requirements For Safety Assurance Of New And Altered Works* as well as all other testing and certification requirements specified herein.

A Project Test Plan covering all testing activities for the CBI system and associated interfaces shall be submitted to the RailCorp Representative for approval.

The Supplier shall institute procedures for verification and checking of all aspects of the signalling design and site-specific aspects of the CBI. These activities shall be fully documented and be undertaken by personnel independent of the design team. Copies of the test documentation shall be submitted to the RailCorp Representative.

5.1 Programme of Works

The Supplier for the CBI system shall co-ordinate his works with the other work on the site as described in the Particular Specification.

Superseded by T HR SC 00719 SP v1.0, 29/03/2017

The Supplier shall provide a detailed contract works programme and keep the programme updated. Items relating to the CBI system which need to included with the programme:

a) Delivery of Validation Documents

b) Joint RailCorp/Supplier type approval and review

c) Production of CBI Procedures and Practices for RailCorp requirements

d) Design reviews

e) Manufacture of CBI equipment

f) Soak test and testing of CBI equipment at factory

g) Quality Review/Audits of CBI Manufacturing Activities

h) Quality Reviews/Audits of all other CBI Activities

i) Production of CBI Site-specific Data

j) Independent Verification of CBI site-specific data

k) CBI Configuration Management activities

l) Factory Acceptance Testing of CBI equipment

m) Site Acceptance Testing of CBI equipment

n) Production of training course notes and conduct training courses

o) On Site soak period for CBI equipment

p) Testing of signalling operator interface to the CBI system.

5.2 Design Review

The design program shall be prepared by the Supplier and shall include formal design reviews at appropriate stages of CBI system design, installation, commissioning and in service usage. These 4 (four) design reviews are to evaluate achievement of the requirements of this Specification. The reviews are to be a formal systematic study of the CBI system design and is to be carried out jointly by specialists from the Supplier and the RailCorp's Representative. Progress reports are to be prepared from each review.

Items to be consider during the reviews include:

a) Safety

b) Reliability and maintainability estimates

c) Identification of potential design, installation or operational problems

d) Identification of items which reduce reliability and maintainability.

e) Evaluation of significant differences between the proposed design and proven designs

f) Life cycle considerations

Superseded by T HR SC 00719 SP v1.0, 29/03/2017

5.3 Configuration Management and Version Control

The Supplier shall provide configuration management and version control for all software and hardware used for the CBI system, Design System, Simulator, maintenance terminal, event logger and test equipment. Where the software is divided into separate functional modules, each of these modules shall be under separate version control. This configuration management system shall be fully documented and include a documented version control system for amending the software and hardware and for installing the amended software or hardware into the CBI equipment/system.

A documented system of configuration management shall be implemented to ensure that the correct versions of hardware and software for a particular installation are recorded and adhered to.

The Supplier shall submit the Project Configuration Management Plan for the CBI system to the RailCorp Representative with the Project Quality Plan required by Section 3.2. The Supplier shall base their Configuration Management Plan on *ISO 10007 Quality Management – Guidelines for Configuration Management.*

5.4 Inspection and Testing

The signalling system, as a whole shall be inspected, set to work, tested and commissioned as detailed in RailCorp *Specification SPG 0711 Inspection, Testing, Installation and Commissioning Requirements for Safety Assurance of New and Altered Works*, the Particular Specification and in the specific procedures or codes of practice for the CBI system.

The Supplier shall train RailCorp's nominated personnel who shall take an active part in all testing activities as necessary.

The testing procedures and practices which apply to the CBI system shall be submitted to RailCorp Representative 90 days prior to the commencement of testing activities, or when training commences, whichever is the earliest.

Final certification for the system and test results for functional and signalling tests detailed herein, shall be supplied by the Supplier at the time of commissioning the system. This certification shall take into account RailCorp's standards and practices.

Complete control table tests shall be carried out on a Simulator with trackside equipment simulated.

Testing procedures and documentation shall meet the requirements of RailCorp *Specification SPG 0711 Inspection, Testing, Installation and Commissioning Requirements for Safety Assurance of New and Altered Works* in all instances, i.e. a similar level of exhaustive inspection, checking, quality control and assurance, setting to work, testing and commissioning, including documentation in the form of installation and commissioning work packages.

5.4.1 CBI System Tests

Functional control table testing of the CBI system shall be carried out as follows:

The interlocking functional tests and simulation tests shall be carried out in accordance with RailCorp *Specification SPG 0711 Inspection, Testing, Installation and Commissioning Requirements for Safety Assurance of New and Altered Works* and in accordance with the procedures and practices laid down for the CBI system, and compliant with the validation procedures laid down in this Specification.

Complete control table tests shall be carried out on a Simulator.

Superseded by T HR SC 00719 SP v1.0, 29/03/2017

These tests shall include but not be limited to:

a) Cross boundary tests to adjacent interlockings.

b) All controls in the computer based interlocking area.

c) Simulation of all vital and non-vital inputs and outputs.

d) Total system monitoring of commands and controls implemented by the system.

During the pre-site testing of data, all the interlocking and controls shall be functionally tested. The event recorder is to be fully tested and the records analysed for correct operation.

This testing shall take place at the Supplier's premises in the greater Sydney Metropolitan Area.

The Supplier shall provide for the RailCorp's Representative to carry out a final functional/simulation tests assisted by the Supplier.

The Supplier shall, prior to the final functional/simulation test by RailCorp's Representative, have carried out all testing of the system necessary to verify and validate the CBI system design to the requirements. This shall include full functional test to control tables, track plans and other design requirements.

The test engineer shall be able to simulate the operator's push-button, keys and switch actions by changing the state of the simulated operator interface.

The test engineer shall be able to make changes to the incoming indications such as simulation of track circuits occupied and clear, dropping of point detection, checking of signal lamp filament fail and lamp-out proving, controls and interface functions to enable functional testing of the system to be carried out.

A permanent record, on tape or hard disk, shall be kept by the system of all tests carried out. This shall be available in hard copy for future reference and archive purposes.

In addition to functional tests of the interlocking, tests shall be carried out on any controls initiated from the maintainer's terminal in accordance with this Specification. It shall be possible to carry out tests by means of simulated movement of trains on the Simulator.

Test copies of control tables, track plans, circuit diagrams and any other design documents produced for the particular system shall be fully marked up and certified by signature, in accordance with RailCorp *Specification SPG 0711 Inspection, Testing, Installation and Commissioning Requirements for Safety Assurance of New and Altered Works* as follows:

The Supplier shall carry out checks, tests and provide documentation to prove that all labelling, security coding and hard-wired identity links etc., for the interlocking or pluggable units, are correct.

5.4.2 Testing of Equipment

General

Testing of trackside equipment shall be carried out to fulfil the requirements of RailCorp *Specification SPG 0711 Inspection, Testing, Installation and Commissioning Requirements for Safety Assurance of New and Altered Works* including all inspection, checking, quality control/assurance and wiring tests.

Superseded by T HR SC 00719 SP v1.0, 29/03/2017

In addition to the activities listed in *SPG 0711 Inspection, Testing, Installation and Commissioning Requirements for Safety Assurance of New and Altered Works*, the Supplier shall check, record and document any polarising, programming or coding pins/sockets fitted to the CBI system.

Circuit Tests Tests shall be carried out on trackside equipment racks in accordance with RailCorp *Specification SPG 0711 Inspection, Testing, Installation and Commissioning Requirements for Safety Assurance of New and Altered Works* including but not limited to:

a) Wire count analysis and null counts

b) Bell test to circuit diagrams

c) Power supply checks and tests

d) Insulation tests

e) Coding/configuration checks

f) Function Tests

   i) The tests shall be carried out with all wires terminated and relay/unit wire connectors locked into their respective plug boards/bases. During the bell test, relays, control units and communications equipment units etc. shall not be plugged into their plug boards/bases and fuses/negative links, arrestors etc. but shall be left disconnected.

g) Coding/Configuration Checks

   i) Inspection checks shall be carried out and recorded to verify that any coding pins, coding wires, connections, coding configuration holes, used for establishing CBI equipment addresses or configurations are correct to the circuit diagrams and tables, and are in good physical order.

5.4.3 Site Testing

General

Site tests shall be carried out by the Supplier in order to verify that the site installation is correct and that when the system as a whole i.e. control units, ground and trackside equipment, data links, interfaces and the control centre equipment are connected together they work correctly and safely, as an integrated system. The Supplier shall provide for RailCorp's Representative to witness all testing.

Testing Methodology

The inspection, checking, quality control/assurance and testing of main cables, tail cables, location cases/racks, power supplies shall be carried out, certified and documented in accordance with RailCorp *Specification SPG 0711 Inspection, Testing, Installation and Commissioning Requirements for Safety Assurance of New and Altered Works* and the commissioning work package.

During these tests care shall be taken to ensure that CBI system equipment is disconnected to avoid damage from high voltage insulation test equipment etc.

Superseded by T HR SC 00719 SP v1.0, 29/03/2017

Certification

The Supplier shall provide complete quality documentation of all tests carried out in the office or in the workshop prior to site testing commencing including but not limited to:

a) Control table records.

b) Track plan records.

c) Track insulation plan records (for clearance purposes).

d) Checked and certified data record printouts.

e) Wiring diagrams (along with test certificate for all wiring).

f) All factory test certificates for units and systems.

g) Site testing and functional testing of trackside equipment.

h) Through testing and System testing of the CBI system.

The above records shall be checked against any site modifications. Diagrams, plans and test certification shall be brought up to date/as built status.

Commissioning tests shall be carried out and documented in accordance with RailCorp *Specification SPG 0711 Inspection, Testing, Installation and Commissioning Requirements for Safety Assurance of New and Altered Works*.

Alterations and Stage Work

Alterations of the site-specific data for new or modified signalling arrangements shall be done via the Design System and the documented procedures for the CBI system.

5.4.4 General Tests

In addition to the testing procedures specified in this section for the CBI system, the Supplier shall carry out inspection, checks, quality control and assurance on the following in accordance with RailCorp *Specification SPG 0711 Inspection, Testing, Installation and Commissioning Requirements for Safety Assurance of New and Altered Works*.

a) Telemetry and panel processing systems.

b) Control panels, diagrams, desks, consoles.

c) Ground and trackside equipment such as, but not limited to: point machines, detection, ground frames releases, push buttons, signals, train stops, track circuits, level crossings, power supplies and cables.

5.4.5 Soak Testing

The CBI system equipment is to be soak tested before commissioning. The soak testing shall involve the powering up and operation of as much of the CBI equipment as possible to help locate infant mortality failures and early faults before the CBI system is commissioned.

The Supplier is to submit details of the soak testing programme to the RailCorp Representative for approval. The minimum soak testing period shall be two weeks.

Superseded by T HR SC 00719 SP v1.0, 29/03/2017

5.4.6 Commissioning

The commissioning of the CBI system involves the booking out of order of the existing signalling system, the bringing into use of new track arrangements and related equipment, and the bringing into use of the CBI equipment and related field signalling equipment. Detailed procedures for the commissioning of the system shall be provided by the Supplier as specified in RailCorp *Specification SPG 0711* prior to commissioning.

6 CBI Safety Validation and Type Approval

6.1 Fail Safe Operation

The CBI system shall provide intrinsically safe and reliable operation of `vital' railway signalling equipment. The failure of any portion or portions of the system shall not result in an unsafe condition, but shall bring the system to a pre-defined safe condition. The system shall be designed to principles to ensure fail safe operation.

The System Design including all hardware, software and communications shall have had all aspects validated to demonstrate that it complies to its principles of fail safe operation. The validation activities shall have been undertaken independently of those for the design of the system.

6.2 Verification and Validation

The system design, hardware and software, shall have been independently validated for the CBI system. These processes shall have included validation of all hardware design and all safety critical software.

6.2.1 Software Validation

The processes involved in software validation shall have been carried out by a group independent of the CBI design team. The software validation process conducted by the CBI system/equipment Supplier should have generated some or all of the following documents or equivalent to provide a proof of software safety:

a) Documented Quality Management Plan for the development meeting the intent of *ISO9001*

b) Documented System Development Methodology

c) Documentation of Safety Goals and how these Safety Goals have been achieved

d) Formal specification with mathematical proof

e) Use of a Validated Compiler and high level language

f) Audits of use of structured programming rules and prescribed rules for documentation and independent verification teams

g) Safety reviews and safety audits

h) Testing of machine code on target hardware

i) Use of Defensive Programming

j) Static compliance with specification

Superseded by T HR SC 00719 SP v1.0, 29/03/2017

k) Static software analysis

l) Dynamic software analysis

m) Functional testing

n) Full testing through every branch of program

o) Dynamic compliance with specification

p) Software error effects analysis

q) White-box testing of system

r) Code inspection by a third party

s) In Service usage of the System

t) Calculation of Mean Time between Wrong Side Failures

6.2.2 Hardware Validation

The hardware shall have been validated to ensure it meets the design specifications and that it will operate safely and not compromise system integrity at any time. The validation processes shall have been carried out by groups independent of the CBI system designers. The hardware validation process should have generated some or all of the following documents to provide a proof of hardware safety:

a) Documented Quality Management Plan for the development meeting the intent of *ISO9001*

b) Documented System Development Methodology

c) Documentation of Safety Goals and how these Safety Goals have been achieved

d) Static compliance with the specifications

e) Dynamic compliance with specification

f) Audits of use of prescribed rules for documentation and independent verification teams

g) Safety reviews and safety audits

h) Functional testing of all equipment

i) Full field testing of the system

j) Failure mode, effect and criticality analysis

k) Common mode failure analysis

l) Fault Tree Analysis

m) White-Box Testing of system

n) Free testing - what if? method

o) Simulation Testing

Superseded by T HR SC 00719 SP v1.0, 29/03/2017

p) Calculation of Mean Time between Wrong Side Failures

q) Determine tables for calculating residual risks

r) In Service usage of the system

6.2.3 Validation of Design Changes

All design changes, both hardware and software, incorporated in the CBI system since the original validation shall have been validated in the same manner or better.

AS61508 Functional safety: safety-related systems should be used as a guideline for all design changes.

6.2.4 Provision of Documentation for Validation

The provision of the documentation is mandatory for the type approval process. This documentation shall demonstrate that the system meets all the safety and integrity requirements of this Specification.

The documents provided are to be signed and authorised for use. If the documents are not signed then a signed statement detailing the status of these documents is required.

A comprehensive index shall be provided with the documentation. This index shall list all of the documents provided together with the document version numbers and issue dates. This index shall be provided with the Supplier's initial type approval submission to allow RailCorp to form an opinion as to whether there is sufficient documentation for the CBI system to start the type approval process.

If the CBI system is the same as has been previously approved for an equivalent application by RailCorp then only the documentation concerning changes is required.

6.2.5 Validation Review

A joint RailCorp Representative and Supplier Validation Review shall be undertaken to the satisfaction of RailCorp's Representative. This review is a fundamental and essential part of the contract. The Supplier shall provide any additional information or documents requested by RailCorp's Representative to demonstrate that the system has been fully validated as a safe and suitable system.

This validation review is a part of the requirements for the type approval process as required by RailCorp *Specification SPG 0710 Type Approval Requirements for Signalling Systems and Equipment.*

RailCorp's Representative will provide the premises for the validation review.

At the end of the review a preliminary report will be written which will outline any outstanding issues which must be resolved satisfactorily before a type approval certificate can be issued in accordance with RailCorp *Specification SPG 0710 Type Approval Requirements for Signalling Systems and Equipment*.

The Supplier shall provide experienced and competent personnel and any additional documentation necessary to conduct a detailed review of the safety and integrity principles, the validation process and the validation documents. The review will cover the complete CBI system. Both hardware and software aspects will be covered. The Supplier's personnel shall be available for the full period of the review. They will be required to answer any questions that may arise. It is expected that detailed technical questions will be asked. At least two experienced, competent personnel who are very familiar with the technical aspects and usage of the CBI system would be required.

Superseded by T HR SC 00719 SP v1.0, 29/03/2017

The review shall take 10 working days and will only be of a shorter duration at the discretion of RailCorp's Representative. The review shall be completed before commissioning of the CBI system into operational use.

An example CBI validation review agenda will be as follows:

a) A presentation that defines the safety goals and safety requirements for the CBI system. This is expected to take ½ a day.

b) A presentation that details the strategies used in the design, and manufacture of the CBI system to meet the safety goals and requirements. This is expected to take 1½ days.

c) A presentation that defines all aspects of the implementation and maintenance of a particular installation that relate to safety and how these are addressed with the particular CBI system. This is expected to take ½ a day.

d) Review of safety goals, safety requirements, and the implementation strategies used to achieve safety goals and requirements. This is expected to take ½ a day.

e) A presentation that provides an overview of the documentation supporting the CBI system. The documents are to be mainly those produced before and during the development process, to control, plan, and document the process. Copies of the original documents used by the development team will be reviewed. This is expected to take 1 day.

f) Examination of the supporting documentation, looking for evidence of due diligence in the Validation that safety goals and safety requirements are complete and correct. Documentation produced during the initial design stages through to current practice should be presented. This is expected to take 1½ days.

g) Examination of the supporting documentation, looking for evidence of due diligence in the initial Verification that the CBI system meets safety goals and safety requirements. This is expected to take 2 ½ days.

h) Examination of the supporting documentation, looking for evidence of due diligence in the on-going Verification that the CBI system continues to meet the safety goals and safety requirements. This is expected to take 1 day.

i) Produce a preliminary report. This is expected to take 1 day.

6.2.6 Insufficient Proof of Safety

If the Supplier fails to provide sufficient documentary evidence to satisfy the RailCorp Representative and the RailCorp Signals Standards Engineer that the CBI system is suitable for type approval, and has been proven to be safe, and suitable for use on the RailCorp signalling system then the Supplier shall be deemed to have defaulted in the performance of the contract.

Superseded by T HR SC 00719 SP v1.0, 29/03/2017

Appendix A Information to be provided by Suppliers

Information to be provided by Suppliers shall include but is not limited to:

Item No	Section Reference	Information Required
1	1.5	The Supplier shall provide a list of all documents proposed to be covered by a non-disclosure agreement.
2	6.1	The Supplier shall provide the documentation detailing the "Principles of Fail Safe Operation" to which the CBI system was designed.
3	3.3	The Supplier shall provide: • Details of the standards against which the CBI system was developed. • An overview of the development and design process to show how it met the nominated standard. • A copy of any reports that demonstrate that the requirements of the standard were met. • Copies of the Requirements Specifications for the system.
4	3.3.2, 6.2.3	The Supplier shall provide a list of any Quality Procedures and Work Instructions currently in place, that cover the management of design changes.
5	3.3.3	The Supplier shall provide complete details of the standards to which the equipment is to be manufactured. Differences between overseas standards and Australian standards are to be highlighted.
6	3.4	Year 2000 – Compliance, all of the supplied CBI equipment, maintenance equipment and test equipment is certified Year 2000 compliant
7	3.3.3	The Supplier shall furnish the following information in respect of all the organisations involved in manufacturing or assembly of any part of the CBI equipment: Organisation: (Name) Documented Quality Procedures and Work Instructions: Yes/No Quality Standards: ISO 9001/ISO 9002/Other (Please Specify) Accreditation: Yes (Please indicate date)/NO Accrediting organisation: (Name) List of items to be produced and activities to be performed.
8	3.5	The Supplier shall detail the expected system life, and how this value has been determined both theoretically and from practical tests and shall warrant spares and system availability for the time nominated.
9	Section 6	The Supplier shall provide the details of the validation process for the CBI equipment as detailed below: • Details of the organisations involved in the validation process including an organisational structure, details of the actions by different groups involved and details of their independence from the system designers. • An overview of the validation process with a summary of the results of each separate activity involved in the validation process. The Supplier shall provide an index of the validation documents and other documents relating to the "proof of safety" of the CBI

Superseded by T HR SC 00719 SP v1.0, 29/03/2017

		equipment and supporting systems. This index shall include the document reference, version numbers and issue dates. The Supplier shall provide details of how they will undertake the validation review process. This shall include details of: Any additional documentation that will be provided. The personnel with the necessary expertise to support the validation review process. This shall include full details of their qualifications, experience with the CBI system and experience with the validation process.
10	3.11	The Supplier shall submit details of all checks that are provided by the Design System and provide full details of the methods used to check for site-specific designer error.
11	3.11.1	The Supplier shall detail any requirements for drawing signalling circuits in relay logic form to define any of the RailCorp's design requirements.
12	3.8	The Supplier shall detail where one CBI sub system area of control starts and the next CBI sub system area finishes. The information shall detail the logical break up of boundaries and the testing and checking procedure to prove that where a complex route exit for example, overlaps to two CBI sub systems, that the overall integrity of the system can be maintained. The Supplier shall also detail any data fixes, which are required including any non standard data constructions.
13	3.7.2	The Supplier shall detail the nature and function of the system of diversity used and how this diversity provides the system with its safety and integrity.
14	3.7.1	Is the system offered the latest product? When is the offered system due to be discontinued as a standard product by the Supplier?
15	3.7.2	The Supplier shall detail any parts of the system where diverse features are not available. This shall include but not limited to processor memory and communications.
16	4.4.2	The Supplier shall detail any mandatory procedures required for the system maintenance.
17	4.4.2	The Supplier shall detail the security features that are built in to the system offered to ensure this requirement is met
18	3.7.3	The Supplier shall detail any requirements for configuration of modules or altering of straps or coding pins.
19	5.3	The Supplier shall provide details of the Configuration Management System used to manage change for the CBI system.
20	4.1.2	The Supplier shall detail the performance time constraints for a system of the configuration being tendered.
21	3.9.6	The Supplier shall provide a complete technical description of the signalling operator interface requirements, including drawings. This shall also include details of protocols and standards to which the equipment adheres. All details of the proposed system configuration and individual items of the system shall be detailed.
22	3.9.4	The Supplier shall detail all instances where a relay interface will be used to operate signalling functions. This shall include an example circuit drawing and description of operation.
23	3.11, 3.12	The Supplier shall provide full information on the system development tools to enable the RailCorp Representatives to produce site-specific data for any particular location or to change existing site-specific data to accommodate signalling layout changes.

Superseded by T HR SC 00719 SP v1.0, 29/03/2017

24	3.11	Full and complete details of the Design System offered and the number of different scheme designs that the system can provide.
25	3.13	The Supplier shall provide full details of the Maintainer's Terminal. This shall include a list of all equipment and a description of all diagnostic functions.
26	3.14	The Supplier shall detail the operation and use of vital blocking functions.
27	3.15	The Supplier shall provide details on the event recorder and state any non-compliance's with this Specification.
28		The Supplier shall provide details of the equipment's performance limits in regard to the stated physical environment.
29	3.7.7, 3.7.8, 3.7.9	The Supplier shall supply detailed information on this requirement with particular reference to safety of personnel.
30	4.5.12, 4.4.10,	The Supplier shall detail the protection provided against static charges.
31	3.9.11	The Supplier shall provide full details of the method used for vital communications links.
32	3.9.12	The Supplier shall provide detailed calculations of power consumption and volts drop for the system configuration. The Supplier shall indicate locations where a 120V power supply is required. In areas where point complexities exist consideration shall be given to systems that allow reduction in size of the points main cabling due to switching arrangements of the equipment. Any degradation of the systems operation times shall be clearly identified.
33	3.9.12	The Supplier shall provide full details of the effect of any interruption to the AC mains supply on the CBI equipment. This shall include a diagram showing the cycle of operation of the CBI system under such an interruption.
34	4.5.5	The Supplier shall supply full details of the methods of surge protection available to immunise the CBI equipment from high voltage surges. This information shall cover: • Power equipment • Communications link • Trackside equipment
35	4.5.8	The Supplier shall detail the size of the equipment and access space requirements for the equipment.
36	4.5, 3.9	The Supplier shall provide details of the proposed system configuration. This shall include all modules proposed to be used, their location and interconnection to each other and the signalling equipment. For each type of module proposed to be used, the Supplier shall provide the following information: • Module name • Module type or designation • Version • Size LxWxH and weight • Supply voltage • Communication Bearers (if applicable) • Operating range - Temperature and Humidity • Function description summary • Number of modules manufactured (This version) • Date first module in service (This version) • MTBF of module
37	3.7.1, 4.3	The Supplier shall give details of experience for at least two installations of equivalent size to the project which have been in

Superseded by T HR SC 00719 SP v1.0, 29/03/2017

		use for a minimum period of two years. Information shall be provided for these installations concerning the mean time between failure of the equipment. The Supplier shall also provide mean time between failure statistics for all field replaceable units.
38	4.3.2	The Supplier shall provide details to demonstrate that the system can meet the reliability performance requirements of this Specification.
39	3.7.6	The Supplier shall provide details of the MTBWSF as specified. These shall include all assumptions and calculations for the above together with details of any wrong side failures experienced in the use of the system. Details of protection against common mode or systematic failures shall also be included
40	4.4.5	The Supplier shall nominate all modules that take longer than 30 seconds to return to full operation after their replacement and include details of the module's function, MTBF and recovery time.
41	4.4	The Supplier shall supply information on the maintenance requirements of the CBI system. This shall include details of maintenance periods and the capability of the personnel required to maintain the equipment.
42	4.4.4 (Standard Modules)	The Supplier shall detail any module for which an equivalent from another manufacturer is available.
43	4.4.4 (Sub-system Isolation)	The Supplier shall detail any requirements to turn off, any portion of the system affected by replacement of a module and the state of outputs, during the process of replacement of a module.
44	4.4.10, 4.4.11, 4.4.12	Suppliers shall nominate all test equipment and tools necessary to fault find and maintain the system.
45	4.4.6	The Supplier shall detail any special requirements for the training courses.
46	4.4.6	The Supplier shall provide full details of the courses. These details shall include: • Name of Course: • Course attendee level: • Course duration: ..... days of .... hours. • Proposed Course Instructors: • Course Notes: Name and reference no. • No. of pages • Date last revised • Copy of index to be attached • Copy of Course Syllabus • Previous presentations of this Course: • Railway Authorities • Dates • Number of attendees • Course Presenter
47	3.16	The Supplier shall provide a detailed list of all documentation and manuals proposed to be with the CBI system. The following information shall be provided for each manual and document: • Name of manual/document: • Date last revised: • No. of pages: • Copy of Index to be provided.

Superseded by T HR SC 00719 SP v1.0, 29/03/2017

48	4.4.9	The Supplier shall list all consumable items required for the normal operation and maintenance of the system, and the recommended or estimated annual usage for each item and the associated costs.
49		The Supplier shall detail its current arrangements and locations for producing the CBI equipment.
50	4.4.1	The Supplier shall provide details of its organisational set up for maintenance support to carry out this work in Sydney.
51		The Supplier shall supply full and complete information on the other railway authorities user's experiences of the system offered. In addition the Supplier shall provide details of any major system faults during its life time and shall fully detail any wrong side or alleged wrong side failures attributed to the system.
52	1.4	The Supplier shall nominate all royalty agreements and any licensing agreements with a full and detailed explanation of each and all the conditions that may be applied.
53		The Supplier shall supply information on the method of testing used in previous installations.
54		The Supplier shall supply documentation of previous procedures for commissioning systems into use.
55	4.4.15	The Supplier shall confirm that the defect liability service requirement is complied with and shall nominate the personnel to undertake this service.

Superseded by T HR SC 00719 SP v1.0, 29/03/2017

Appendix B Items deliverable prior to submission of designs for review

Items deliverable prior to submission of designs for review shall include but is not limited to:

Item	Section Reference	Description
1	3.2	The Supplier shall submit a Project Quality Plan and a Project Configuration Management Plan for the CBI system project to the RailCorp Representative before design activities commence.
2	3.11	The Supplier shall provide full documentation of any site-specific data produced in interim steps between analysis of the control tables/track plans and entry into the Design System.
3	5.2	Design Review program shall be prepared for the 4 design reviews: design and configuration, installation, commissioning and in service usage.
4	Section 6	The joint RailCorp and Supplier validation review and type approval shall commence and be completed before commissioning.
5	3.8	At the time of submitting the system equipment configuration for approval, the Supplier shall provide full details of what is required to expand the system. This shall include a separate drawing showing additional equipment or alterations required for expansion and the amount of additional equipment that can be added.
6	3.9	It is a requirement for the Supplier to specify and produce the necessary procedures and practices for connecting the CBI system to the RailCorp's existing signalling systems.
7	3.9.4	Relays may be used to interface the CBI to operate the signalling functions. The Supplier shall submit typical circuits for these interfaces for approval by the RailCorp Representative. These circuits shall be submitted within eight weeks of commencement of the contract.
8	1.4, 3.11, 3.12	The Supplier shall supply all the hardware and software to permit the RailCorp to undertake new signalling designs and alterations to CBI installations.
9	3.11	The Supplier shall provide all manuals and training required for the RailCorp Representatives to operate and maintain the Design System.
10	4.3.3	Reliabilty Estimation is to be completed to ensure the proposed configuration of the CBI system will meet the requirements.
11	4.5.7	Electromagnetic Compatibilty of the CBI system will be achieved. Supplier to provide evidence that the requirements will be met.
12	4.3.1, 4.3.2, 4.3.3	The Supplier shall submit a new configuration in accordance with this section and shall submit all the data detailed above for this new configuration if requested. This shall be submitted within 28 days of being notified by the RailCorp Representative that the original proposed configuration has not been substantiated to meet the specified performance.

Superseded by T HR SC 00719 SP v1.0, 29/03/2017

Appendix C Items deliverable prior to commencement of testing

Items deliverable prior to commencement of testing shall include but is not limited to:

Item	Section Reference	Description
1	3.11.1	The Supplier shall provide Design Procedures and Work Instructions fully detailing the site-specific data entry method of the accepted Supplier offer.
2	4.3	The Supplier shall provide assurance that the CBI system meets the reliability and maintainability requirements specified. Further to the specified requirements this shall be provided in accordance with Australian Standard AS 3960 "Guide to Reliability and Maintainability Program Management", or an equivalent nationally or internationally recognised standard. Both observed and assessed characteristics.
3	5.4	The testing procedures and practices which apply to the CBI system being offered shall be submitted to the RailCorp Representative within 90 days of Contract Award, or when training commences, whichever is the earliest.
4	Section 5	A detailed test programme shall be produced and submitted for approval by the RailCorp Representative prior to the commencement of testing. This testing programme shall be submitted 90 days or more prior to the commencement of testing. This test programme shall include a Factory Acceptance Test of the CBI equipment.

Superseded by T HR SC 00719 SP v1.0, 29/03/2017

Appendix D Items deliverable prior to commissioning

Items deliverable prior to commissioning shall include but is not limited to:

System as built.

Item	Section Reference	Description
1	4.4.2	Any mandatory safety procedures for signalling maintainers. These documents shall be issued to the RailCorp at least 14 days prior to the training courses, and prior to commissioning the system.
2	5.3	The Supplier shall provide procedures for checking cards or modules in the field and detail strict configuration procedures when the removal of components or straps are required.
3	5.3	This configuration management and version control shall be fully documented and include a documented change procedure for amending the software and hardware of the CBI system.
4	3.11	Design System.
5	3.12	Simulator.
6	3.13 3.15 3.15.2	Maintainers terminal. Event recorder. Remote Access Facility
7	3.7.11 (Communication Link Bit Error Rate Requirements)	Communication Link Bit Error Rate Requirements - Testing of communications links is required.
8	3.16, 4.4.8	The Supplier shall have a documented quality work procedure which details requirements for packaging, storage and protection in sufficient detail to ensure spare parts and consumables are correctly stored.
9	3.16	The Supplier shall supply complete information on the maintenance and operation of the system to enable maintenance and fault finding to be performed in the manner detailed above. This information, in the form of manuals, drawings, design details shall be supplied prior to the running of training courses and of commissioning the system.
10	4.4.10, 4.4.12	Any additional test equipment or specialist tools detailed in the Supplier offer.
11	4.4.12	Test sets shall be provided that permit testing of each and every module that is used, including every version of these modules.
12	3.1	The Supplier shall provide complete quality documentation of all tests carried out in the office or in the workshop prior to site testing commencing.
13	3.16	The Supplier shall supply manuals and procedures for all the test equipment.
14	4.4.6 (Conduct of Training Courses)	The Supplier shall submit one copy of the course notes for each course two weeks prior to the commencement of the respective courses. The course notes shall be reviewed by the RailCorp Representative.

Superseded by T HR SC 00719 SP v1.0, 29/03/2017

15	4.4.6	Training courses
16	3.16	There shall be separate manuals for at least and not limited to the following items: Signalling Design and Data Preparation System Configuration Design and Interfacing First Line Maintenance Manual Workshop Maintenance Manual Operation of Field Equipment Operation of Office Equipment Quality Management Procedures Test equipment user manuals and testing procedures The Supplier shall provide the number of manuals laid down in the Particular Specification (if not specified a minimum of one controlled document set and 3 uncontrolled sets).
17	3.16 4.4.7 4.4.8 4.4.9 4.4.13 4.5.6 4.5.5 5.4.5 5.4.6	The manuals shall be specific to the equipment and the installation provided for the RailCorp and shall not be generic manuals. The manuals shall be provided 30 days prior to the commencement of system site testing. A draft of the manual shall be submitted to the RailCorp Representative at least 90 days prior to the commencement of testing for approval by the RailCorp. The manuals shall be updated by the Supplier to reflect any changes resulting from actions during testing or commissioning. This updating shall be completed not later than 30 days after the system is brought into use. The Supplier shall provide: Fault finding procedures. Spare Parts. Consumable items. Maintainability Demonstration shall be conducted as specified. Supplier testing and demonstration of Electromagnetic compatibility. High Voltage Surges (including Lighting) Testing of surge protection equipment and systems in accordance with requirements. Soak Testing of CBI system and equipment. The Supplier must submit details of the soak testing programme (with Project Test Plan) to the RailCorp Representative and must conduct the soak testing of the CBI system before commissioning. Detailed procedures for the commissioning of the system into use and the carrying of all aspects of the commissioning shall be supplied by the Supplier 42 days prior to commissioning.

Superseded by T HR SC 00719 SP v1.0, 29/03/2017

Appendix E Items deliverable prior to practical completion

Items deliverable prior to practical completion shall include but is not limited to:

Item	Section Reference	Description
	3.16, 1.4, 1.5	The following documents and a licence to reproduce the documents for use by the RailCorp in the operation and maintenance of the system: Manuals complete for the as built system. Special documents as per the Particular Specification. Special circuit drawings and equipment drawings produced specifically for the Contract. Licence for RailCorp to reproduce, copy, amend or in any way deal with the design and software of the Design System and the Simulator. Licence for RailCorp to reproduce, copy, amend or in any way deal with the design and software of the maintainer's terminal and any equipment or system related to it performing its function. Licence for RailCorp to reproduce, copy, amend or in any other way deal with the text and drawings of the training course notes, course presentation materials and operator's manuals.
	3.11, 5.4.1	A permanent record, on tape or hard disk, shall be kept of all tests carried out on the site-specific data and the CBI system. This shall be available in hard copy (when required) for future reference and archive purposes.
	5.4.1	Test copies of control tables, track plans, circuit diagrams and any other design documents produced for the particular system shall be fully marked up and certified by signature at two (2) stages, in accordance with specifications referred to in this section.
	4.4.15	Defects liability service.
	4.3.7	Reliability and Maintainability performance reviews and assessments are to be completed at 5 months and 11 months after commissioning.
	4.3.8	Upgrading and modification to the CBI system is required if the Reliability and Maintainability performance requirements are not met. This shall be completed before practical completion and before the final certificate can be issued.

Superseded by T HR SC 00719 SP v1.0, 29/03/2017

Appendix F Items to be specified in the Particular Specification

Items to be specified in the Particular Specification shall include but is not limited to:

Item	Relevant Section	Particular Specification Requirements
1		The exact requirements and location of the signalling operator interface.
2	4.3, 4.4	Changes to reliability or maintainability performance. (spares must be supplied with every CBI system installation unless adequate spares are already available).
3	4.3.4	Changes to the traffic density classifications in relation to reliability.
4	4.4.6	Increased or reduced training requirements. Number of students. Levels of training required.
5	4.4.6	The location of the training courses. The location is specified by the RailCorp Representative in consultation with signalling maintainers attending the training courses.
6	3.16	The quantity of document sets if different from one controlled document set and three uncontrolled document sets.
7	6.2.5	The expected location of Validation review and type approval. The location is specified by the RailCorp Representative.
8	3.15	Details on the provision of Event recording and location.
9	3.15.2	Remote event recorder access facility location. Requirements for additional remote access facilities.
10	3.13.1	Maintainer's terminal location and requirements for additional terminals.
11	3.9.12	Back-up power supply arrangements. Dual supply locations and motor generator sets. Are standby batteries required to cover time for motor generator set startup? Is a UPS or static switch required?
12		Environmental conditions
13	4.4.15	Defect liability service requirements (length of time etc).
14		ATP interface requirements
15	4.5.4	Electrical traction immunisation requirements. Are there any special requirements placed on the CBI system by the traction system. (e.g. AC immunity or noise requirements)?
16	4.5.5	Additional surge protection requirements.
17	3.9.7	Level Crossing implementation.
18	3.11, 3.12	If a suitable Design System and Simulator is available independent of the Supplier than it is not necessary to provide another Design System and Simulator.