SINGLE WIDTH CABINET - **CONTACT SENSING**

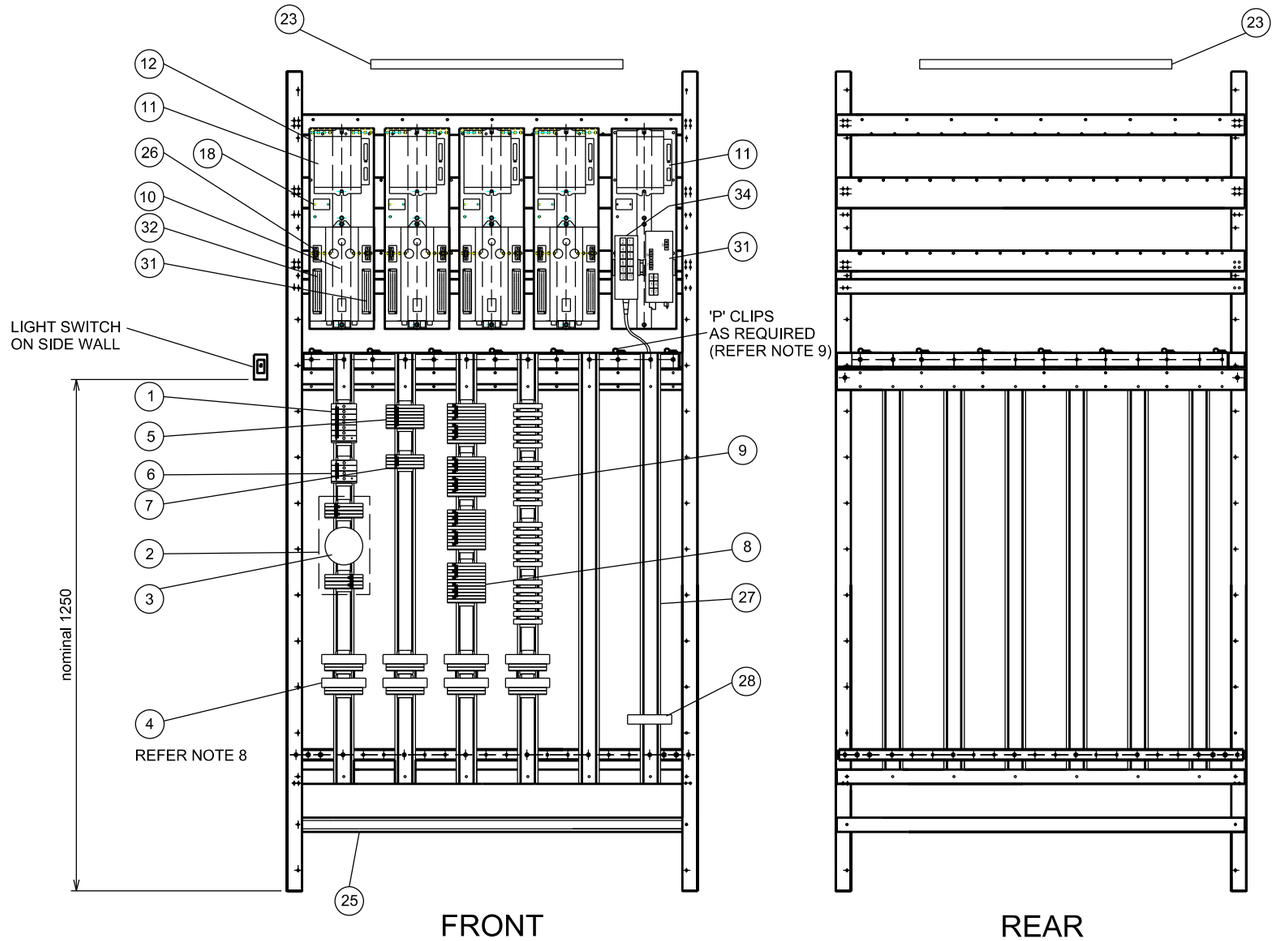

NOTES:

1. LIGHTS TO BE MOUNTED AT TOP OF CABINET AT THE FRONT AND THE REAR.
2. SCREWS/BOLTS/NUTS TO BE TORQUED IN ACCORDANCE WITH MANUFACTURERS GUIDE LINES.
3. USE PHILIPS PAN HEAD SCREWS EXCEPT WHERE NOMINATED OTHERWISE.
4. REFER TO CIRCUIT BOOK FOR CABLE EQUIPMENT ASSIGNMENTS AND PANEL WIRING DETAILS.
5. WITHIN THE CABINET FIT CABLE ID MARKERS TO BALISE CABLES AT LEU M12 FILOTEX PLUG END AND ON TAIL CABLE.
6. THIS RACK LAYOUT MAY BE USED IN A WALK-IN LOCATION.
7. CABINET NOT SHOWN ON RACK LAYOUT FOR SIMPLICITY. REFER TO DRAWING No. M05-145.
8. REFER DRG. No. M05-557 FOR TAIL CABLE TERMINATION DETAILS.
9. FIX LEU INPUT CABLE TO 'P' CLIP WITH CABLE TIE THEN FIX CABLE IN DUCT ENSURING CABLE HAS MINIMAL SLACK SO AS NOT TO PERMIT THE CABLE TO REACH THE WRONG LEU SOCKET.
10. SURGE ARRESTOR FOR 120V SUPPLY FITTED AS REQUIRED. REFER TO CIRCUIT BOOK.
11. FIT SPRING WASHER AND FLAT WASHER TO ALL EQUIPMENT MOUNTING SCREWS EXCEPT WHERE NYLOC NUTS ARE USED.
12. REFER TO DRAWING No M05-532 FOR MAIN EARTHING ARRANGEMENTS.
13. WHERE A DOCUMENT HOLDER IS NOT EXISTING, FIT ONE DOCUMENT POUCH TO THE INSIDE OF THE DOOR FACING THE LEU MODULES.
14. FIT ONE METER ATTACHEMENT PLATE TO THE INSIDE OF THE DOOR FACING THE LEU MODULES (CLOSE TO THE HINGE SIDE OF THE DOOR), AT A NOMINAL HEIGHT OF ~1.3m ABOVE GROUND.
15. EXAMPLE OF OPTICAL NETWORKING EQUIPMENT SHOWN TOP RIGHT CORNER OF CABINET. REFER TO DWG. M05-554 FOR EQUIPMENT MOUNTING DETAILS. FIBRE OPTIC CABLE TO BE RUN UP FROM CABINET BASE WITHIN TRUNKING.
16. THE FOLLOWING LEU PART VERSIONS ARE APPROVED AT THIS POINT IN TIME: ALSTOM PART: DTR0000245619 WITH SOFTWARE V431 - HARDWARE VERSIONS U or S or T, or ALSTOM PART: DTR2000003567 VERSION B.

ITEM	COMPONENT	STOCK CODE	REFERENCE
35	12 FIBRE OPTICAL CABLE (OR 24 FIBRE ALTERNATIVE S/C 1563931). NOT SHOWN.	1890102	
34	OPTICAL SPLICE BOX - AFC BRAND. FULLY LOADED FOR SPLICING	1001019866	FDE-12SC-1-S
33	OPTICAL DUPLEX SC/SC PATCH CORDS (1m) (NOT SHOWN) 2 OFF	1889427	-
32	ATP 24VDC POWER CABLE FOR ETHERNET SWITCH (NOT SHOWN)	-	M05-520 SHEET 2
31	RUGGEDCOM RS900 ETHERNET SWITCH	2085181	
30	DOCUMENT POUCH (SELF ADHESIVE). NOT SHOWN. REFER TO NOTE 13.	-	M05-155
29	METER ATTACHEMENT PLATE (SELF ADHESIVE). NOT SHOWN. REFER TO NOTE 14.	1001019900	M05-564 SHT. 1
28	SURGE ARRESTOR (DEHN) WHEN REQUIRED (REF. NOTE 10)	2090744	-
27	TS-35 DIN RAIL (15mm ZINC STEEL SLOTTED)	-	-
26	LEU CONFIGURATION KEY (DONGLE)	1001019923	M05-551
25	CROSS BAR FOR CABLE CLAMPS (REFER SHEET 5)	-	-
24	CABINET (NOT SHOWN)	-	M05-143
23	CABINET LIGHTING (REFER NOTE 1)	-	M05-547
22	LEU VITAL PLUG COUPLER (NOT SHOWN)	-	M05-516
21	LEU 24V DC POWER CABLE (NOT SHOWN)	-	M05-520
20	POWER SUPPLY 120V AC POWER CABLE (NOT SHOWN)	-	M05-522
19	BALISE CABLE AT LEU (TYPE A or B) (NOT SHOWN)	-	M05-542
18	ENGRAVED LEU ID LABEL	-	M05-549
17	ETHERNET CABLE (WHERE REQUIRED) (TYPE J or K)	-	M05-543 & M05-533
16	ENGRAVED LABELS FOR GROUP MARKERS (BLACK ON WHITE)	-	M05-531
15	CLOSED SLOT GREY PVC - NOMINAL 50 x 75 (VERTICAL)	-	-
14	CLOSED SLOT GREY PVC - NOMINAL 100 x 75 (HORIZONTAL)	-	-
13	FALCON 4 PADLOCK	1745215	-
12	LEU MOUNTING BRACKET TYPE 2	-	M05-554
11	MIPS200 POWER SUPPLY 24V DC	1001019921	DTR0000252238
10	ALSTOM MICROCODER LEU REFER TO NOTE 16 FOR APPROVED MODELS	1001019922	-
9	RESISTOR TERMINAL ASSEMBLY	2088912	M05-531
8	ATP INTERFACE TERMINAL ASSEMBLY	-	M05-531
7	NX12 TERMINAL ASSEMBLY	-	M05-531
6	BX12 TERMINAL ASSEMBLY	-	M05-531
5	NX120 TERMINAL ASSEMBLY	-	M05-531
4	SURGE ARRESTOR ASSEMBLY	-	M05-531
3	120V AC - 12V AC 50VA TOROIDAL TRANSFORMER	2088920	M05-531
2	12V TRANSFORMER ASSEMBLY	-	M05-531
1	BX120 TERMINAL ASSEMBLY	-	M05-531

VERSION	DESCRIPTION	DATE	DRAWN	REVIEWED	VERIFIED	APPROVED
G	ADDED STOCK CODES AND NOTE 16	23.5.22	J.F.	J.F.	[illegible]	SOV
F	UPDATED PART NUMBERS FOR LEU	8-4-19	J.F.	J.F.	G.H.	PJMcG
E	ADDED NETWORKING EQUIP. EXAMPLE. UPDATED PARTS LIST. ADDED NOTE 15.	17-7-14	J.F.	J.F.	G.H.	PJMcG
D	ADDED NOTES 13 TO 14 & ITEMS 29 TO 30	9.09.13	J.F.	J.F.	G.H.	W.A.

GENERAL TOLERANCES
LINEAR:
< 1000 ± 0.5mm
≥ 1000 ± 3mm
RADIAL:
< 500 ± 0.25mm
≥ 500 ± 1.5mm
ANGULAR: ± 30'

NSW GOVERNMENT | Transport for NSW

SIGNAL DESIGN

EDMS No. SG0174151

cad

DO NOT AMEND MANUALLY

TITLE ALSTOM ATP LEU FULL HEIGHT CABINET GENERAL LAYOUT

DESIGNED	DRAWN	REVIEWED	VERIFIED	APPROVED
K.FOO	K.FOO	J.FIRMSTONE	G.HOCKINGS	P.ZAMMIT
DATE 18.08.11	SCALE NTS	DRG. No. M05-529	SHEET 1 OF 5	REV. No. G

This drawing and the information contained thereon have been created solely for a particular purpose and client. This is protected by copyright. You may not reproduce any of it in any form without the written permission of Transport for New South Wales. If you do, you may have to pay damages to Transport for New South Wales or you may be prosecuted. ©

ALL DIMENSIONS IN MILLIMETRES

AS 1100 THIRD ANGLE PROJECTION

DF 390x277

File Plotted $$$$$$$$$$$$$DGN\$SPECIFICATION\$$$$$$$$$$$$$$
Plot Date & Time $$$$$$$SYTIME$$$$$$
Plotted by $USERNAME$

SINGLE WIDTH CABINET - **CURRENT SENSING**

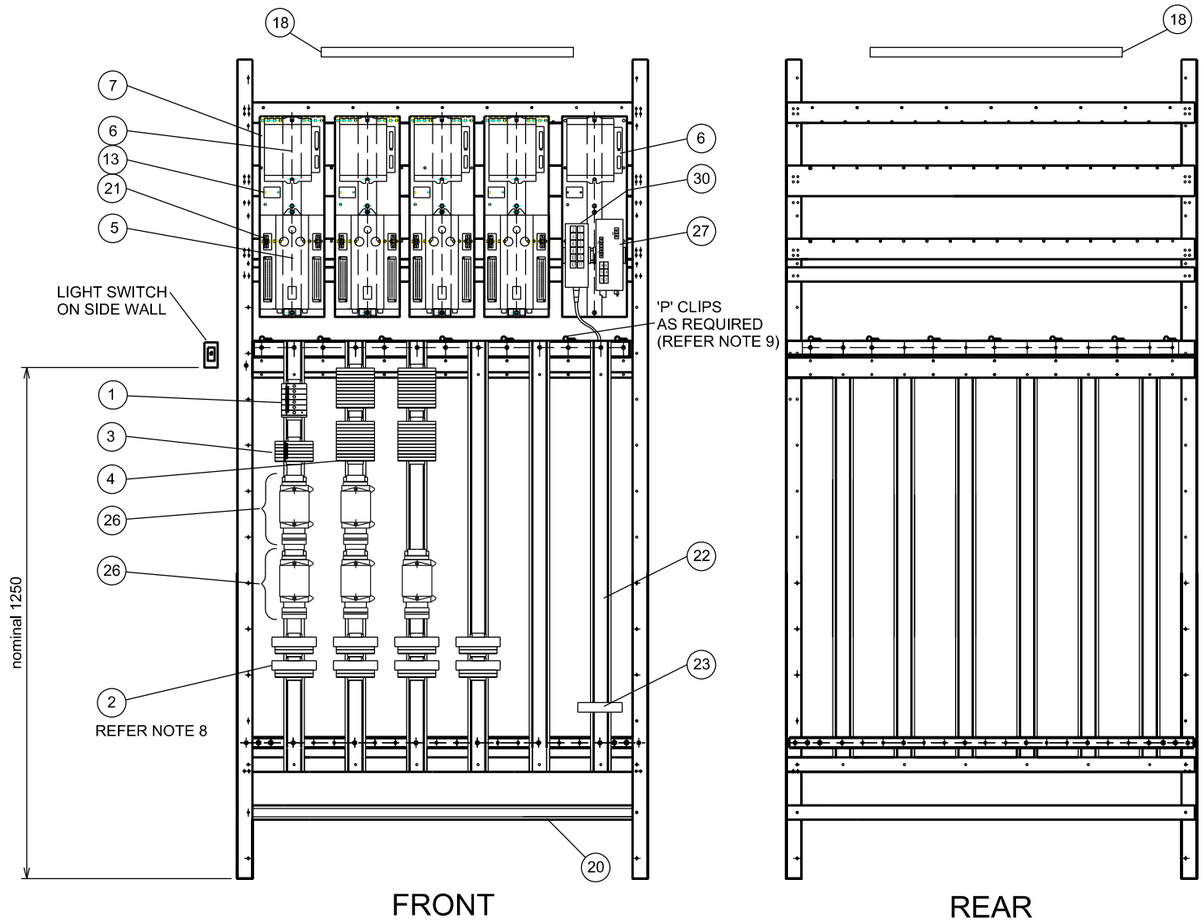

NOTES:

1. LIGHTS TO BE MOUNTED AT TOP OF CABINET AT THE FRONT AND THE REAR.
2. SCREWS/BOLTS/NUTS TO BE TORQUED IN ACCORDANCE WITH MANUFACTURERS GUIDE LINES.
3. USE PHILIPS PAN HEAD SCREWS EXCEPT WHERE NOMINATED OTHERWISE.
4. REFER TO CIRCUIT BOOK FOR CABLE EQUIPMENT ASSIGNMENTS AND PANEL WIRING DETAILS.
5. WITHIN THE CABINET FIT CABLE ID MARKERS TO BALISE CABLES AT LEU M12 FILOTEX PLUG END AND ON TAIL CABLE.
6. THIS RACK LAYOUT MAY BE USED IN A WALK-IN LOCATION.
7. CABINET NOT SHOWN ON RACK LAYOUT FOR SIMPLICITY. REFER TO DRAWING No. M05-145.
8. REFER DRG. No. M05-557 FOR TAIL CABLE TERMINATION DETAILS.
9. FIX LEU INPUT CABLE TO 'P' CLIP WITH CABLE TIE THEN FIX CABLE IN DUCT ENSURING CABLE HAS MINIMAL SLACK AS NOT TO PERMIT THE CABLE TO REACH THE WRONG LEU SOCKET.
10. SURGE ARRESTOR FOR 120V SUPPLY FITTED AS REQUIRED. REFER TO CIRCUIT BOOK.
11. FIT SPRING WASHER AND FLAT WASHER TO ALL EQUIPMENT MOUNTING SCREWS EXCEPT WHERE NYLOC NUTS ARE USED.
12. REFER TO DRAWING No M05-532 FOR MAIN EARTHING ARRANGEMENTS.
13. WHERE A DOCUMENT HOLDER IS NOT EXISTING, FIT ONE DOCUMENT POUCH TO THE INSIDE OF THE DOOR FACING THE LEU MODULES.
14. FIT ONE METER ATTACHEMENT PLATE TO THE INSIDE OF THE DOOR FACING THE LEU MODULES (CLOSE TO THE HINGE SIDE OF THE DOOR), AT A NOMINAL HEIGHT OF ~1.3m ABOVE GROUND.
15. THE POWER FILTER ASSEMBLY IS REQUIRED ON EVERY MIPS200 AT A 'CURRENT SENSING' LOCATION.
16. EXAMPLE OF OPTICAL NETWORKING EQUIPMENT SHOWN TOP RIGHT CORNER OF CABINET. REFER TO DWG. M05-554 FOR EQUIPMENT MOUNTING DETAILS. FIBRE OPTIC CABLE TO BE RUN UP FROM CABINET BASE WITHIN TRUNKING.
17. THE FOLLOWING LEU PART VERSIONS ARE APPROVED AT THIS POINT IN TIME: ALSTOM PART: DTR0000245619 WITH SOFTWARE V431 - HARDWARE VERSIONS U or S or T, or ALSTOM PART: DTR2000003567 VERSION B.

ITEM	COMPONENT	STOCK CODE	REFERENCE
31	12 FIBRE OPTICAL CABLE (OR 24 FIBRE ALTERNATIVE S/C 1563931). NOT SHOWN.	1890102	-
30	OPTICAL SPLICE BOX - AFC BRAND. FULLY LOADED FOR SPLICING	1001019866	FDE-12SC-1-S
29	OPTICAL DUPLEX SC/SC PATCH CORDS (1m) (NOT SHOWN) 2 OFF	1889427	-
28	ATP 24VDC POWER CABLE FOR ETHERNET SWITCH (NOT SHOWN)	-	M05-520 SHEET 2
27	RUGGEDCOM RS900 ETHERNET SWITCH	2085181	-
26	POWER FILTER ASSEMBLY - 1 FILTER ASSEMBLY PER MIPS200 (REFER TO NOTE 15)	-	M05-531 SHT. 2
25	DOCUMENT POUCH (SELF ADHESIVE). NOT SHOWN. REFER TO NOTE 13.	-	M05-155
24	METER ATTACHEMENT PLATE (SELF ADHESIVE). NOT SHOWN. REFER TO NOTE 14.	1001019900	M05-564 SHT. 1
23	SURGE ARRESTOR (DEHN) WHEN REQUIRED (REF. NOTE 10)	2090744	-
22	TS-35 DIN RAIL (15mm ZINC STEEL SLOTTED)	-	-
21	LEU CONFIGURATION KEY (DONGLE)	1001019923	M05-551
20	CROSS BAR FOR CABLE CLAMP (REFER SHEET 5)	-	-
19	CABINET (NOT SHOWN)	-	M05-143
18	CABINET LIGHTING (REFER NOTE 1)	-	M05-547
17	LEU VITAL PLUG COUPLER (NOT SHOWN)	-	M05-516
16	LEU 24V DC POWER CABLE (NOT SHOWN)	-	M05-520
15	POWER SUPPLY 120V AC POWER CABLE (NOT SHOWN)	-	M05-522
14	BALISE CABLE AT LEU (TYPE A or B) (NOT SHOWN)	-	M05-542
13	ENGRAVED LEU ID LABEL	-	M05-549
12	ETHERNET CABLE (WHERE REQUIRED) (TYPE J or K)	-	M05-543 & M05-533
11	ENGRAVED LABELS FOR GROUP MARKERS (BLACK ON WHITE)	-	M05-531
10	CLOSED SLOT GREY PVC - NOMINAL 50 x 75 (VERTICAL)	-	-
9	CLOSED SLOT GREY PVC - NOMINAL 100 x 75 (HORIZONTAL)	-	-
8	FALCON 4 PADLOCK	1745215	-
7	LEU MOUNTING BRACKET TYPE 2	-	M05-554
6	MIPS200 POWER SUPPLY 24V DC	1001019921	DTR0000252238
5	ALSTOM MICROCODER LEU REFER TO NOTE 17 FOR APPROVED MODELS	1001019922	-
4	ATP INTERFACE ASSEMBLY	-	M05-531
3	NX120 TERMINAL ASSEMBLY	-	M05-531
2	SURGE ARRESTOR ASSEMBLY	-	M05-531
1	BX120 TERMINAL ASSEMBLY	-	M05-531

VERSION	DESCRIPTION	DATE	DRAWN	REVIEWED	VERIFIED	APPROVED
G	ADDED STOCK CODES AND NOTE 17	23.5.22	J.F.	J.F.	[illegible]	SOV
F	UPDATED PART NUMBERS FOR LEU	8-4-19	J.F.	J.F.	G.H.	PJMcG
E	ADDED NETWORKING EQUIP. EXAMPLE. UPDATED PARTS LIST. ADDED NOTE 16.	17-7-14	J.F.	J.F.	G.H.	PJMcG
D	ADDED NOTES 13 TO 15 & ITEMS 24 TO 26	12.9.13	J.F.	J.F.	G.H.	W.A.

GENERAL TOLERANCES
LINEAR:
< 1000 ± 0.5mm
≥ 1000 ± 3mm
RADIAL:
< 500 ± 0.25mm
≥ 500 ± 1.5mm
ANGULAR: ± 30'

NSW GOVERNMENT | Transport for NSW

SIGNAL DESIGN

EDMS No. SG0174152

cad

DO NOT AMEND MANUALLY

This drawing and the information contained thereon have been created solely for a particular purpose and client. This is protected by copyright. You may not reproduce any of it in any form without the written permission of Transport for New South Wales. If you do, you may have to pay damages to Transport for New South Wales or you may be prosecuted. ©

ALL DIMENSIONS IN MILLIMETRES

AS 1100 THIRD ANGLE PROJECTION

TITLE ALSTOM ATP LEU FULL HEIGHT CABINET GENERAL LAYOUT

DESIGNED	DRAWN	REVIEWED	VERIFIED	APPROVED
K.FOO	K.FOO	J.FIRMSTONE	G.HOCKINGS	P.ZAMMIT

DATE	SCALE	DRG. No.	SHEET	REV. No.
18.08.11	NTS	M05-529	2 OF 5	G

DF 390*277

File Plotted $$$$$$$$$$$$$$DGN\$SPECIFICATION\$$$$$$$$$$$$$$
Plot Date & Time $$$$$$$$SYTIME$$$$$$
Plotted by $USERNAME$

DOUBLE WIDTH CABINET - **CONTACT SENSING**

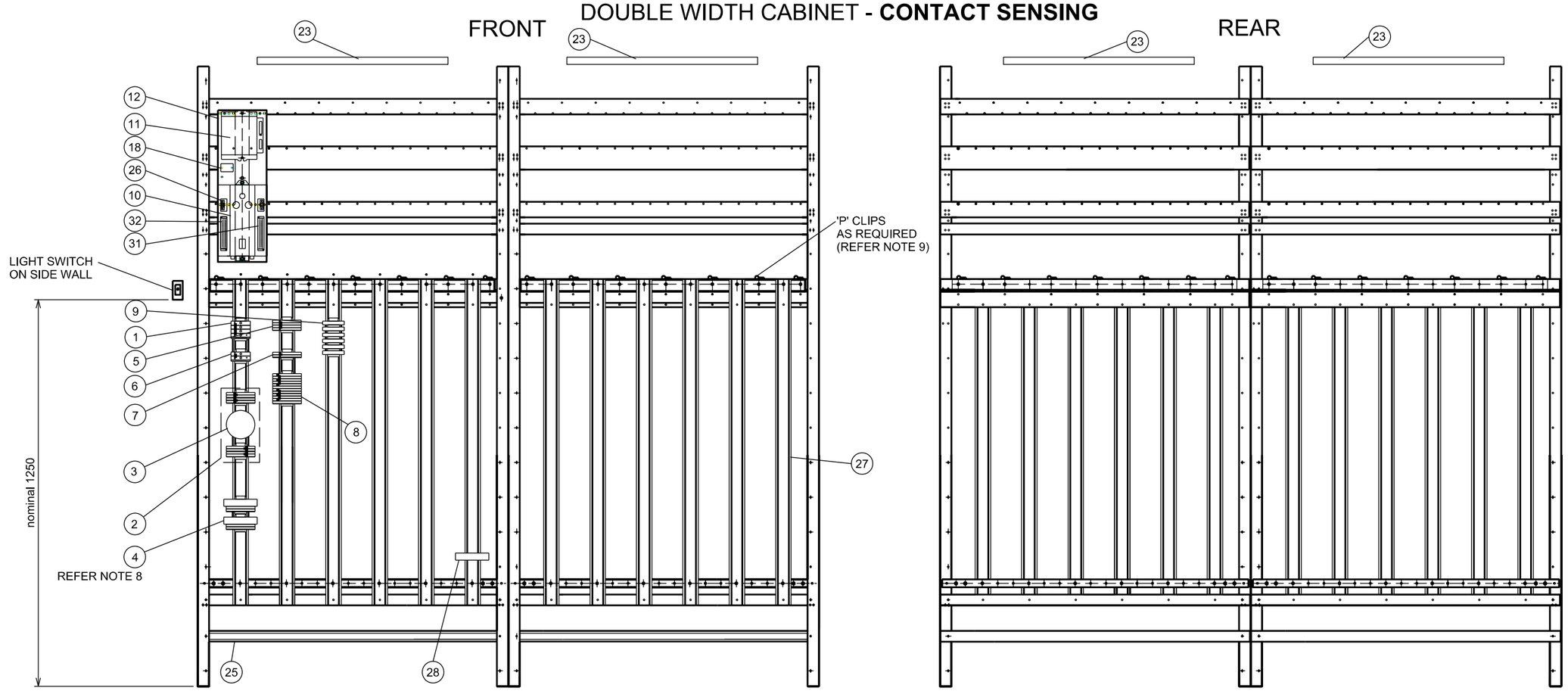

NOTES:

1. LIGHTS TO BE MOUNTED AT TOP OF CABINET AT THE FRONT AND THE REAR.
2. SCREWS/BOLTS/NUTS TO BE TORQUED IN ACCORDANCE WITH MANUFACTURERS GUIDE LINES.
3. USE PHILIPS PAN HEAD SCREWS EXCEPT WHERE NOMINATED OTHERWISE.
4. REFER TO CIRCUIT BOOK FOR CABLE EQUIPMENT ASSIGNMENTS AND PANEL WIRING DETAILS.
5. WITHIN THE CABINET FIT CABLE ID MARKERS TO BALISE CABLES AT LEU M12 FILOTEX PLUG END AND ON TAIL CABLE.
6. THIS RACK LAYOUT MAY BE USED IN A WALK-IN LOCATION.
7. CABINET NOT SHOWN ON RACK LAYOUT FOR SIMPLICITY. REFER TO DRAWING No. M05-145.
8. REFER DRG. No. M05-557 FOR TAIL CABLE TERMINATION DETAILS.
9. FIX LEU INPUT CABLE TO 'P' CLIP WITH CABLE TIE THEN FIX CABLE IN DUCT ENSURING CABLE HAS MINIMAL SLACK AS NOT TO PERMIT THE CABLE TO REACH THE WRONG LEU SOCKET.
10. SURGE ARRESTOR FOR 120V SUPPLY FITTED AS REQUIRED. REFER TO CIRCUIT BOOK.
11. FIT SPRING WASHER AND FLAT WASHER TO ALL EQUIPMENT MOUNTING SCREWS EXCEPT WHERE NYLOC NUTS ARE USED.
12. REFER TO DRAWING No M05-532 FOR MAIN EARTHING ARRANGEMENTS.
13. WHERE A DOCUMENT HOLDER IS NOT EXISTING, FIT ONE DOCUMENT POUCH TO THE INSIDE OF THE DOOR FACING THE LEU MODULES.
14. FIT ONE METER ATTACHEMENT PLATE TO THE INSIDE OF THE DOOR FACING THE LEU MODULES (CLOSE TO THE HINGE SIDE OF THE DOOR), AT A NOMINAL HEIGHT OF ~1.3m ABOVE GROUND.
15. THE FOLLOWING LEU PART VERSIONS ARE APPROVED AT THIS POINT IN TIME: ALSTOM PART: DTR0000245619 WITH SOFTWARE V431 - HARDWARE VERSIONS U or S or T, or ALSTOM PART: DTR2000003567 VERSION B.

ITEM	COMPONENT	STOCK CODE	REFERENCE
30	DOCUMENT POUCH (SELF ADHESIVE). NOT SHOWN. REFER TO NOTE 13.	-	M05-155
29	METER ATTACHEMENT PLATE (SELF ADHESIVE). NOT SHOWN. REFER TO NOTE 14.	1001019900	M05-564 SHT. 1
28	SURGE ARRESTOR (DEHN) WHEN REQUIRED (REFER NOTE 10)	2090744	-
27	TS-35 DIN RAIL (15mm ZINC STEEL SLOTTED)	-	-
26	LEU CONFIGURATION KEY (DONGLE)	1001019923	M05-551
25	CROSS BAR FOR CABLE CLAMPS (REFER SHEET 5)	-	-
24	CABINET (NOT SHOWN)	-	M05-145
23	CABINET LIGHTING (REFER NOTE 1)	-	M05-547
22	LEU VITAL PLUG COUPLER (NOT SHOWN)	-	M05-516
21	LEU 24V DC POWER CABLE (NOT SHOWN)	-	M05-520
20	POWER SUPPLY 120V AC POWER CABLE (NOT SHOWN)	-	M05-522
19	BALISE CABLE AT LEU (TYPE A or B)	-	M05-542
18	ENGRAVED LEU ID LABEL	-	M05-549
17	ETHERNET CABLE (WHERE REQUIRED) (TYPE J or K)	-	M05-543 & 533

ITEM	COMPONENT	STOCK CODE	REFERENCE
16	ENGRAVED LABELS FOR GROUP MARKERS (BLACK ON WHITE)	-	M05-531
15	CLOSED SLOT GREY PVC - NOMINAL 50 x 75 (VERTICAL)	-	-
14	CLOSED SLOT GREY PVC - NOMINAL 100 x 75 (HORIZONTAL)	-	-
13	FALCON 4 PADLOCK	1745215	-
12	LEU MOUNTING BRACKET TYPE 2		M05-554
11	MIPS200 POWER SUPPLY 24V DC	1001019921	DTR0000252238
10	ALSTOM uCODER LEU REFER TO NOTE 15 FOR APPROVED MODELS	1001019922	-
9	RESISTOR TERMINAL ASSEMBLY	2088912	M05-531
8	ATP INTERFACE TERMINAL ASSEMBLY	-	M05-531
7	NX12 TERMINAL ASSEMBLY	-	M05-531
6	BX12 TERMINAL ASSEMBLY	-	M05-531
5	NX120 TERMINAL ASSEMBLY	-	M05-531
4	SURGE ARRESTOR ASSEMBLY	-	M05-531
3	120VAC-12VAC 50VA TOROIDAL TRANSFORMER	2088920	M05-531
2	12V TRANSFORMER ASSEMBLY	-	M05-531
1	BX120 TERMINAL ASSEMBLY	-	M05-531

VERSION	DESCRIPTION	DATE	DRAWN	REVIEWED	VERIFIED	APPROVED
G	ADDED STOCK CODES AND NOTE 15	23.5.22	J.F.	J.F.	[signature]	SDV
F	UPDATED PART NUMBERS FOR LEU	8-4-19	J.F.	J.F.	G.H.	PJMcG
E	UPDATED PARTS LIST.	8-7-14	J.F.	J.F.	G.H.	PJMcG
D	ADDED NOTES 13 TO 14 & ITEMS 29 TO 30	12.9.13	J.F.	J.F.	G.H.	W.A.

GENERAL TOLERANCES
LINEAR:
< 1000 ± 0.5mm
≥ 1000 ± 3mm
RADIAL:
< 500 ± 0.25mm
≥ 500 ± 1.5mm
ANGULAR: ± 30'

NSW GOVERNMENT | Transport for NSW

SIGNAL DESIGN

EDMS No. SG0174153

cad

DO NOT AMEND MANUALLY

This drawing and the information contained thereon have been created solely for a particular purpose and client. This is protected by copyright. You may not reproduce any of it in any form without the written permission of Transport for New South Wales. If you do, you may have to pay damages to Transport for New South Wales or you may be prosecuted.

©

ALL DIMENSIONS IN MILLIMETRES

AS 1100 THIRD ANGLE PROJECTION

TITLE
ALSTOM ATP LEU FULL HEIGHT CABINET GENERAL LAYOUT

DESIGNED	DRAWN	REVIEWED	VERIFIED	APPROVED
K.FOO	K.FOO	J.FIRMSTONE	G.HOCKINGS	P.ZAMMIT

DATE	SCALE	DRG. No.	SHEET	REV. No.
18.08.11	NTS	M05-529	3 OF 5	G

DF 390x277

File Plotted $$$$$$$$$$$$$$DGN\SPECIFICATION\$$$$$$$$$$$$$$

Plot Date & Time $$$$$$$SYTIME$$$$$$

Plotted by $USERNAME$

DOUBLE WIDTH CABINET - **CURRENT SENSING**

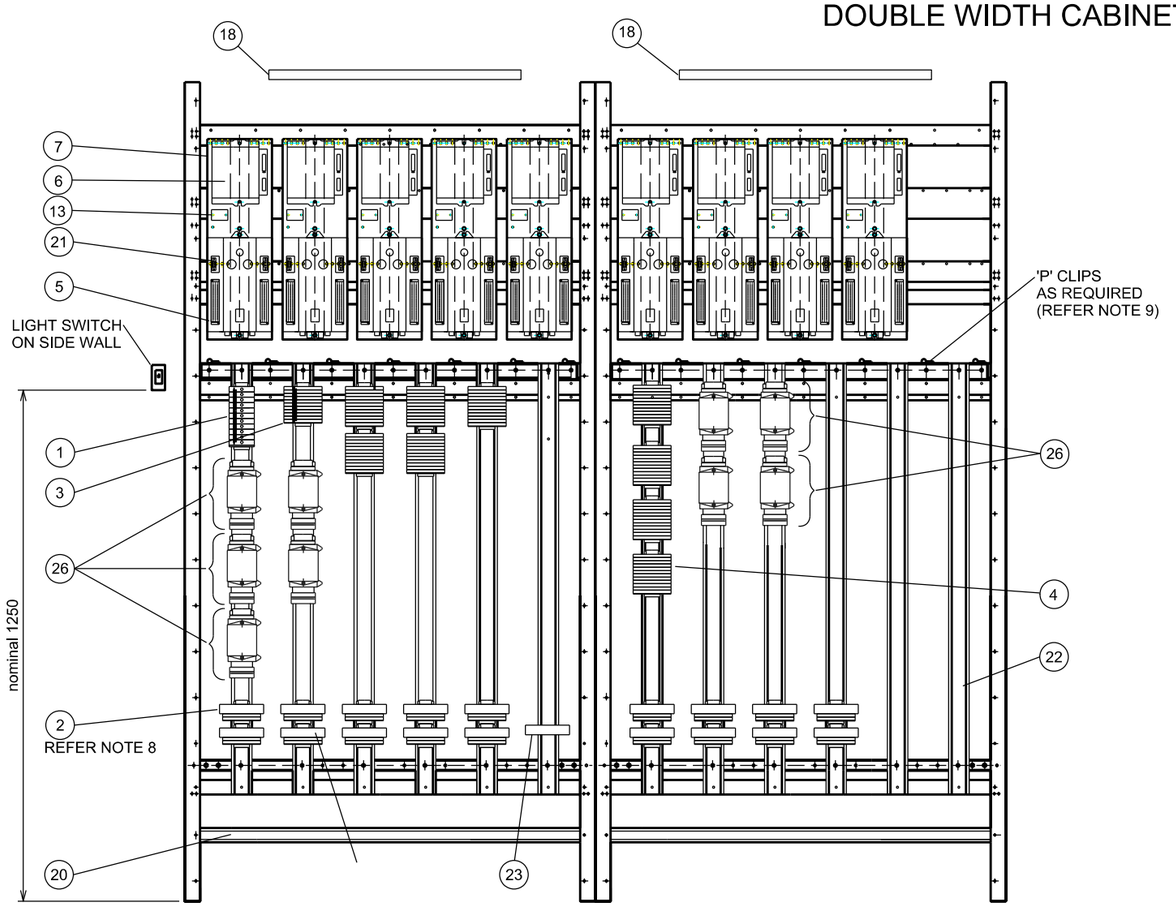

FRONT

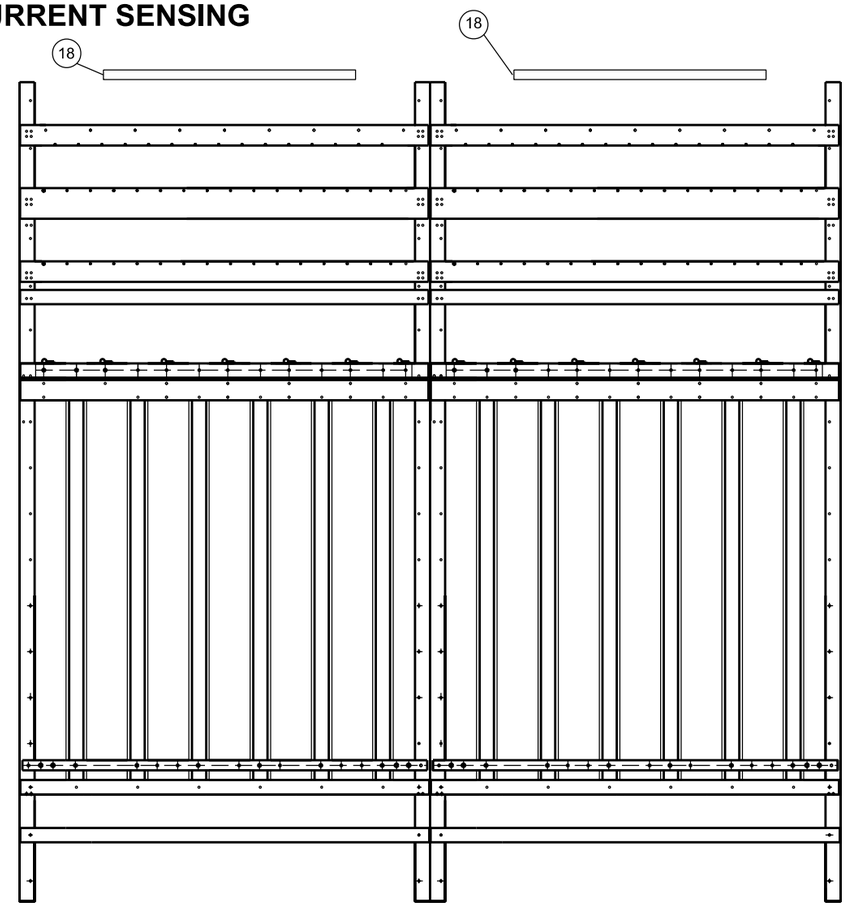

REAR

NOTES:

1. LIGHTS TO BE MOUNTED AT TOP OF CABINET AT THE FRONT AND THE REAR.
2. SCREWS/BOLTS/NUTS TO BE TORQUED IN ACCORDANCE WITH MANUFACTURERS GUIDE LINES.
3. USE PHILIPS PAN HEAD SCREWS EXCEPT WHERE NOMINATED OTHERWISE.
4. REFER TO CIRCUIT BOOK FOR CABLE EQUIPMENT ASSIGNMENTS AND PANEL WIRING DETAILS.
5. WITHIN THE CABINET FIT CABLE ID MARKERS TO BALISE CABLES AT LEU M12 FILOTEX PLUG END AND ON TAIL CABLE.
6. THIS RACK LAYOUT MAY BE USED IN A WALK-IN LOCATION.
7. CABINET NOT SHOWN ON RACK LAYOUT FOR SIMPLICITY. REFER TO DRAWING No. M05-145.
8. REFER DRG. No. M05-557 FOR TAIL CABLE TERMINATION DETAILS.
9. FIX LEU INPUT CABLE TO 'P' CLIP WITH CABLE TIE THEN FIX CABLE IN DUCT ENSURING CABLE HAS MINIMAL SLACK AS NOT TO PERMIT THE CABLE TO REACH THE WRONG LEU SOCKET.
10. SURGE ARRESTOR FOR 120V SUPPLY FITTED AS REQUIRED. REFER TO CIRCUIT BOOK.
11. FIT SPRING WASHER AND FLAT WASHER TO ALL EQUIPMENT MOUNTING SCREWS EXCEPT WHERE NYLOC NUTS ARE USED.
12. REFER TO DRAWING No M05-532 FOR MAIN EARTHING ARRANGEMENTS.
13. WHERE A DOCUMENT HOLDER IS NOT EXISTING, FIT ONE DOCUMENT POUCH TO THE INSIDE OF THE DOOR FACING THE LEU MODULES.
14. FIT ONE METER ATTACHEMENT PLATE TO THE INSIDE OF THE DOOR FACING THE LEU MODULES (CLOSE TO THE HINGE SIDE OF THE DOOR), AT A NOMINAL HEIGHT OF ~1.3m ABOVE GROUND.
15. THE POWER FILTER ASSEMBLY IS REQUIRED ON EVERY MIPS200 AT A 'CURRENT SENSING' LOCATION.
16. THE FOLLOWING LEU PART VERSIONS ARE APPROVED AT THIS POINT IN TIME: ALSTOM PART: DTR0000245619 WITH SOFTWARE V431 - HARDWARE VERSIONS U or S or T, or ALSTOM PART: DTR2000003567 VERSION B.

ITEM	COMPONENT	STOCK CODE	REFERENCE
26	POWER FILTER ASSEMBLY - 1 FILTER ASSEMBLY PER MIPS200 (REFER TO NOTE 15)	-	M05-531 SHT. 2
25	DOCUMENT POUCH (SELF ADHESIVE). NOT SHOWN. REFER TO NOTE 13.	-	M05-155
24	METER ATTACHEMENT PLATE (SELF ADHESIVE). NOT SHOWN. REFER TO NOTE 14.	1001019900	M05-564 SHT. 1
23	SURGE ARRESTOR (DEHN) WHEN REQUIRED (REF. NOTE 10)	2090744	-
22	TS-35 DIN RAIL (15mm ZINC STEEL SLOTTED)	-	-
21	LEU CONFIGURATION KEY (DONGLE)	1001019923	M05-551
20	CROSS BAR FOR CABLE CLAMPS (REFER SHEET 5)	-	-
19	CABINET (NOT SHOWN)	-	M05-145
18	CABINET LIGHTING (REFER NOTE 1)	-	M05-547
17	LEU VITAL PLUG COUPLER (NOT SHOWN)	-	M05-516
16	LEU 24Vdc POWER CABLE (NOT SHOWN)	-	M05-520
15	POWER SUPPLY 120V AC POWER CABLE (NOT SHOWN)	-	M05-522

ITEM	COMPONENT	STOCK CODE	REFERENCE
14	BALISE CABLE AT LEU (TYPE A or B) (NOT SHOWN)	-	M05-542
13	ENGRAVED LEU ID LABEL	-	M05-549
12	ETHERNET CABLE (WHERE REQUIRED) (TYPE J or K)	-	M05-543 & M05-533
11	ENGRAVED LABELS FOR GROUP MARKERS (BLACK ON WHITE)	-	M05-531
10	CLOSED SLOT GREY PVC - NOMINAL 50 x 75 (VERTICAL)	-	-
9	CLOSED SLOT GREY PVC - NOMINAL 100 x 75 (HORIZONTAL)	-	-
8	FALCON 4 PADLOCK	1745215	-
7	LEU MOUNTING BRACKET TYPE 2	1001019895	M05-554
6	MIPS200 POWER SUPPLY 24V DC	1001019921	DTR0000252238
5	ALSTOM MICROCODER LEU REFER TO NOTE 16 FOR APPROVED MODELS	1001019922	-
4	ATP INTERFACE TERMINAL ASSEMBLY	-	M05-531
3	NX120 TERMINAL ASSEMBLY	-	M05-531
2	SURGE ARRESTOR ASSEMBLY	-	M05-531
1	BX120 TERMINAL ASSEMBLY	-	M05-531

VERSION	DESCRIPTION	DATE	DRAWN	REVIEWED	VERIFIED	APPROVED
G	ADDED STOCK CODES AND NOTE 16	23.5.22	J.F.	J.F.	[illegible]	SOV
F	UPDATED PART NUMBERS FOR LEU	8-4-19	J.F.	J.F.	G.H.	PJMcG
E	UPDATED PARTS LIST	8-7-14	J.F.	J.F.	G.H.	PJMcG
D	ADDED NOTES 13 TO 15 & ITEMS 24 TO 26	12.9.13	J.F.	J.F.	G.H.	W.A.

GENERAL TOLERANCES
LINEAR:
< 1000 ± 0.5mm
≥ 1000 ± 3mm
RADIAL:
< 500 ± 0.25mm
≥ 500 ± 1.5mm
ANGULAR: ± 30'

NSW GOVERNMENT | Transport for NSW

SIGNAL DESIGN

EDMS No. SG0174154

cad DO NOT AMEND MANUALLY

This drawing and the information contained thereon have been created solely for a particular purpose and client. This is protected by copyright. You may not reproduce any of it in any form without the written permission of Transport for New South Wales. If you do, you may have to pay damages to Transport for New South Wales or you may be prosecuted. ©

ALL DIMENSIONS IN MILLIMETRES

AS 1100 THIRD ANGLE PROJECTION

TITLE ALSTOM ATP LEU FULL HEIGHT CABINET GENERAL LAYOUT

DESIGNED	DRAWN	REVIEWED	VERIFIED	APPROVED
K.FOO	K.FOO	J.FIRMSTONE	G.HOCKINGS	P.ZAMMIT
DATE 18.08.11	SCALE NTS	DRG. No. M05-529	SHEET 4 OF 5	REV. No. G

DF 390x277

File Plotted $$$$$$$$$$$$$DGN\SPECIFICATION\$$$$$$$$$$$$$$
Plot Date & Time $$$$$$$SYTIME$$$$$$
Plotted by $USERNAME$

CABINET FRAME DIMENSIONS

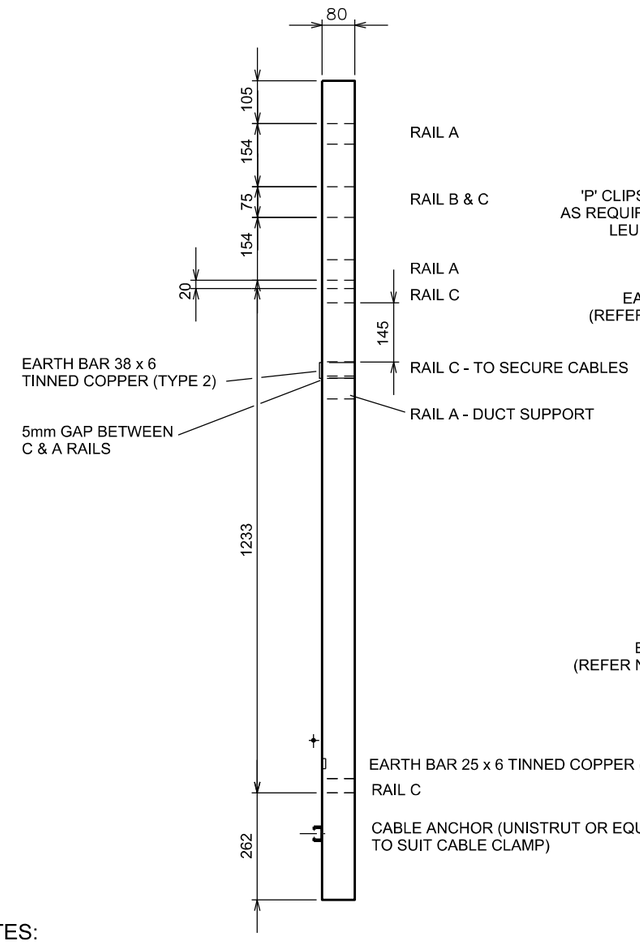

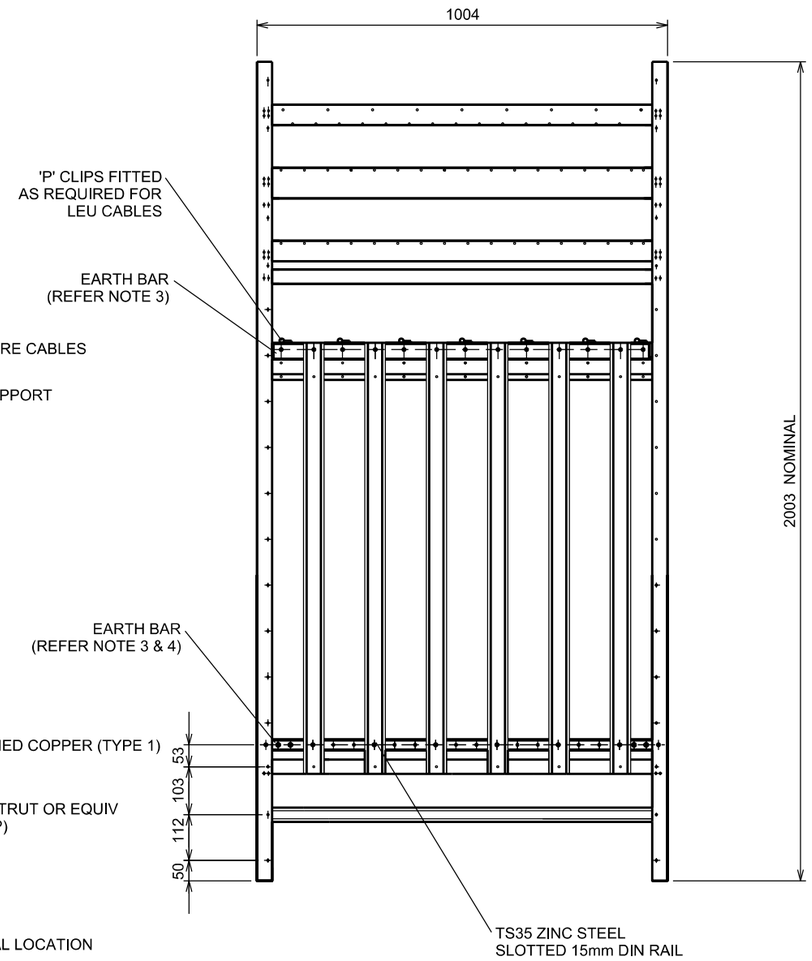

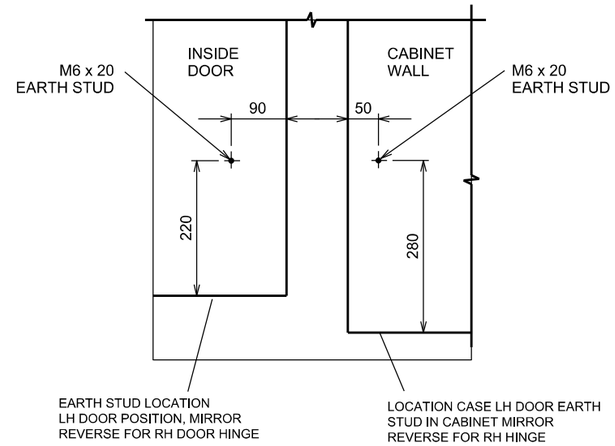

DOOR EARTHING DETAIL
(REFER NOTE 5)

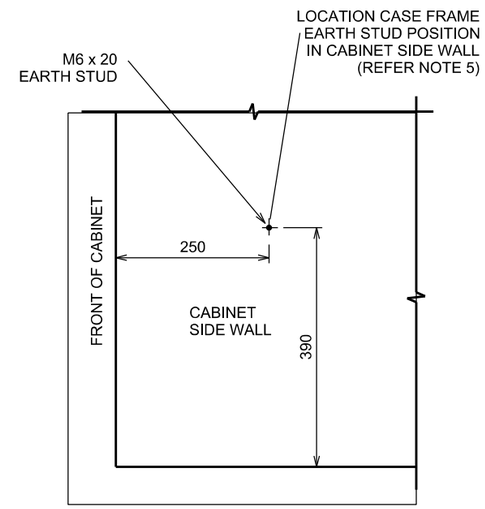

NOTES:

1. REFER TO RAILCORP DRAWING No.'s M05-143 AND M05-149 FOR SIGNAL LOCATION CASE EQUIPMENT RACK ARRANGEMENT ASSEMBLY DETAILS.
2. FOR METALWORK DETAILS REFER TO RAILCORP SERIES DRAWING No's M05-143 THROUGH TO M05-160.
3. REFER TO DRAWING M05-555 FOR EARTH BAR (TYPE 1 & 2).
4. REMOVE PAINT FROM FRAME AT BOTH ENDS WHERE THE EARTH BARS COME INTO CONTACT WITH THE FRAME. APPLY ANTI-CORROSSION PASTE TO THE EXPOSED SURFACE BEFORE FITTING UP EARTH BARS.
5. REFER TO DRAWING M05-532 FOR EARTH CONNECTION DETAILS.
6. FIT SPRING WASHER AND FLAT WASHER TO ALL EQUIPMENT MOUNTING SCREWS.

VERSION	DESCRIPTION	DATE	DRAWN	REVIEWED	VERIFIED	APPROVED
E	UPDATED LOGO	24.6.22	J.F.	J.F.		SOV
D	CORRECTION TO DIN RAIL NOTE	6.09.13	J.F.	J.F.	G.H.	P.J. McG
C	NOTE 2, 5, & 6, EARTH BARS AND EARTH STUD DETAILS ADDED	12.06.12	D.S.	J.F.	G.H.	W.A.

GENERAL TOLERANCES
LINEAR:
< 1000 ± 0.5mm
≥ 1000 ± 3mm
RADIAL:
< 500 ± 0.25mm
≥ 500 ± 1.5mm
ANGULAR: ± 30'

This drawing and the information contained thereon have been created solely for a particular purpose and client. This is protected by copyright. You may not reproduce any of it in any form without the written permission of Transport for New South Wales. If you do, you may have to pay damages to Transport for New South Wales or you may be prosecuted. ©

ALL DIMENSIONS IN MILLIMETRES

AS 1100 THIRD ANGLE PROJECTION

NSW GOVERNMENT Transport for NSW

SIGNAL DESIGN

EDMS No. SG0500138

cad DO NOT AMEND MANUALLY

TITLE ALSTOM ATP LEU FULL HEIGHT CABINET GENERAL LAYOUT

DESIGNED	DRAWN	REVIEWED	VERIFIED	APPROVED
K.FOO	K.FOO	J.FIRMSTONE	G.HOCKINGS	P.ZAMMIT

DATE	SCALE	DRG. No.	SHEET	REV. No.
18.08.11	NTS	M05-529	5 OF 5	E

DF 390*277

File Plotted $$$$$$$$$$$$DGN$SPECIFICATION$$$$$$$$$$$$$$
Plot Date & Time $$$$$$$$SYTIME$$$$$$$
Plotted by $USERNAME$