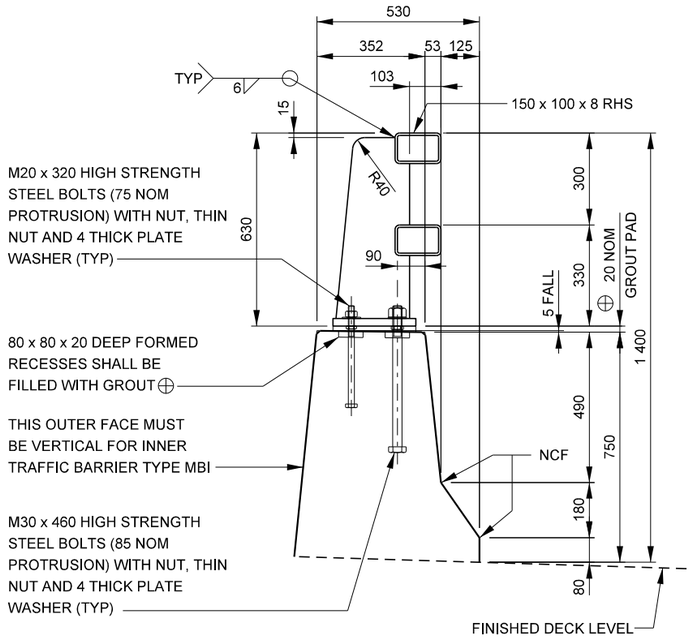

TYPE MAO

OUTER TRAFFIC BARRIER TYPE MAO SHOWN
INNER TRAFFIC BARRIER TYPE MAI SIMILAR
(PROVISION FOR CYCLISTS)

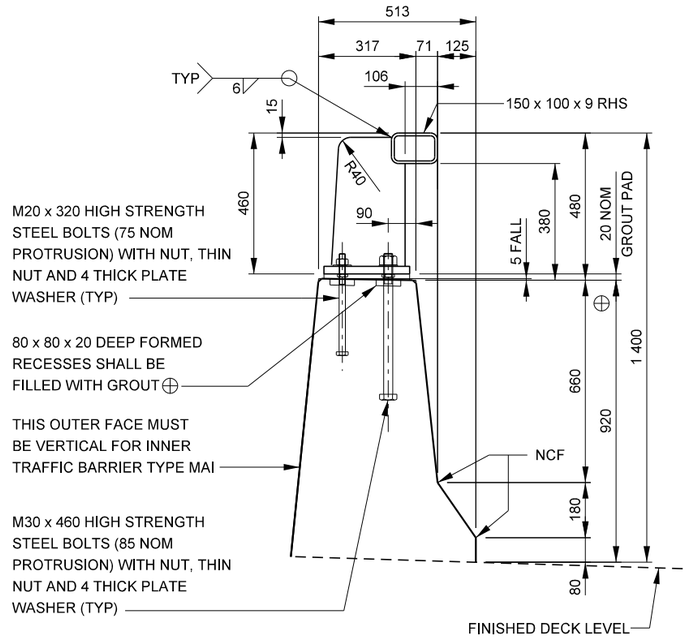

TYPE MBO

OUTER TRAFFIC BARRIER TYPE MBO SHOWN
INNER TRAFFIC BARRIER TYPE MBI SIMILAR
(PROVISION FOR CYCLISTS)

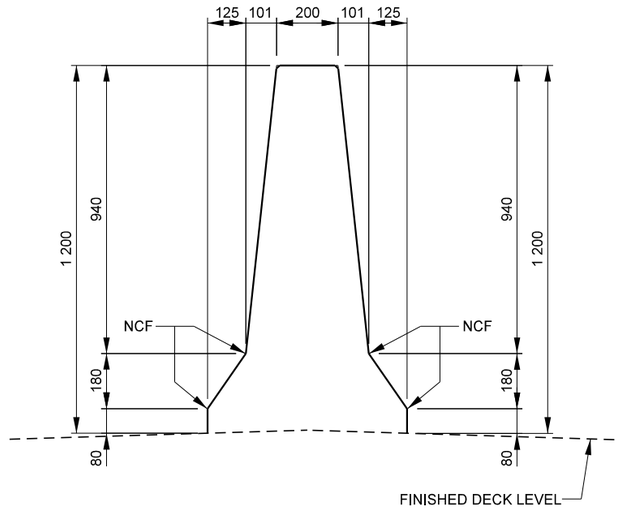

TYPE MCI

MEDIAN TRAFFIC BARRIER

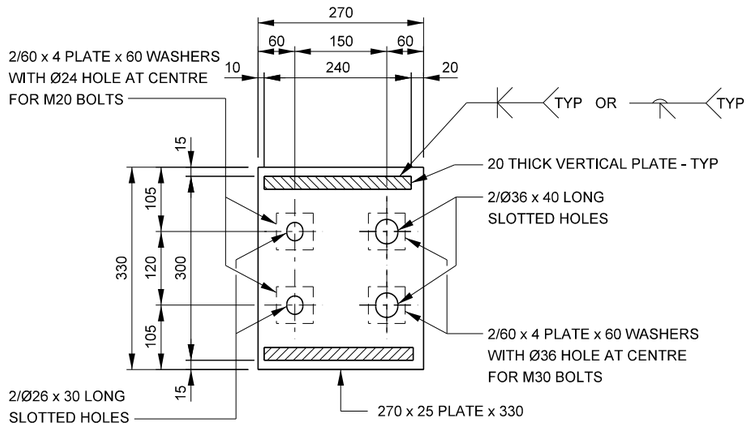

BASE PLATE TYPE MAO

LARGE SERIES WASHERS TO SUIT BOLT SIZES SHOWN MAY BE USED INSTEAD OF PLATE WASHERS

0 100 200 300mm
100 50

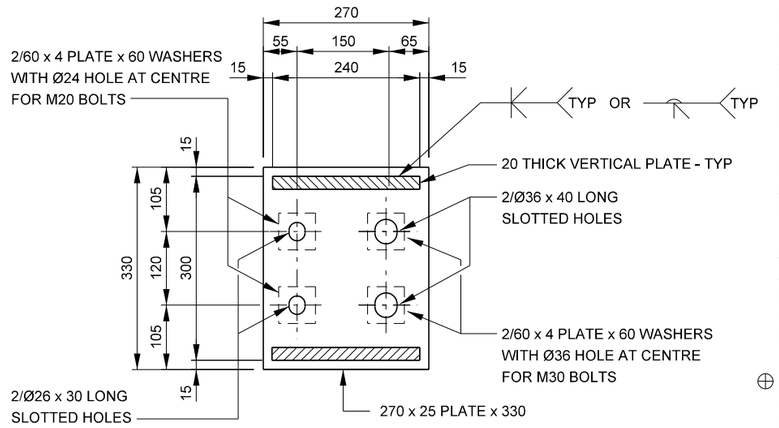

BASE PLATE TYPE MBO

LARGE SERIES WASHERS TO SUIT BOLT SIZES SHOWN MAY BE USED INSTEAD OF PLATE WASHERS

0 100 200 300mm
100 50

GENERAL NOTES

SCALE 0 100 200 300 400 500mm / 100 50 OR AS SHOWN.

DESIGN ASSUMPTIONS:
MAXIMUM POST SPACING: 2 700mm.
POST SPACING TO SUIT PRECAST PARAPET UNITS, SAFETY SCREEN PANELS OR NOISEWALL PANELS AS REQUIRED.
CONCRETE EXPOSURE CLASSIFICATION: B1
MINIMUM 28 DAY COMPRESSIVE STRENGTH OF CONCRETE: 40MPa
10 x 10 CHAMFER SHALL BE USED AT TOP CORNERS OF CONCRETE PROFILE.
STEEL PLATE SHALL CONFORM TO AS/NZS 3678 - 250.
RECTANGULAR AND CIRCULAR HOLLOW SECTIONS SHALL CONFORM TO AS/NZS 1163 - C450LO.
ALL FASTENERS MUST CONFORM TO THE REQUIREMENTS OF ROADS AND MARITIME SERVICES QA SPECIFICATION B240.
HIGH STRENGTH STEEL BOLTS FOR STRUCTURAL ENGINEERING SHALL BE PROPERTY CLASS 8.8 TO AS/NZS 1252.
HIGH STRENGTH STEEL NUTS FOR STRUCTURAL BOLTING SHALL BE PROPERTY CLASS 8 TO AS/NZS 1252.
BOLTING CATEGORY FOR HIGH STRENGTH STEEL BOLTS SHALL BE 8.8/S IN ACCORDANCE WITH AS 5100.6.
STEEL WASHERS, LARGE SERIES, SHALL CONFORM TO AS 1237.1, PRODUCT GRADE A.
ALL STEEL COMPONENTS SHALL BE HOT DIP GALVANIZED AFTER FABRICATION IN ACCORDANCE WITH ROADS AND MARITIME SERVICES SPECIFICATION B201.
BOLTS NUTS AND WASHERS SHALL BE HOT DIP GALVANIZED IN ACCORDANCE WITH AS 1214.
ALL WELDING SHALL BE SP IN ACCORDANCE WITH AS/NZS 1554.1.
ALL WELDING SHALL CONFORM TO AS/NZS 1554.1 WITH ADDITIONAL REQUIREMENTS AS GIVEN IN ROADS AND MARITIME SERVICES SPECIFICATION B201.
WELDING SYMBOLS COMPLY WITH AS 1101.3.
REINFORCEMENT NOT SHOWN. THE SIZE AND SPACING OF REINFORCEMENT MUST BE DETERMINED BY THE DESIGNER.
⊕ DENOTES THE GROUT USED TO CONSTRUCT MORTAR PADS AND FILL FORMED RECESSES SHALL BE SHRINKAGE COMPENSATED HIGH FLOW CEMENTITIOUS GROUT.
MINIMUM COMPRESSIVE STRENGTH OF GROUT SHALL BE 40MPa.
GROUTING SHALL BE CARRIED OUT TO ENSURE THAT THE FORMED RECESSES ARE COMPLETELY FILLED AND THAT THERE ARE NO VOIDS UNDER THE BASE PLATES.
SIDE FACES OF GROUT PADS SHALL BE VERTICAL AND FLUSH WITH EDGES OF BASE PLATES.
THE FORMWORK FOR THE GROUT PADS SHALL REMAIN IN PLACE FOR A MINIMUM OF 3 DAYS AND CURING COMPOUNDS SHALL BE APPLIED TO THE SIDES OF THE GROUT PADS AFTER THE REMOVAL OF FORMWORK.
THE UNDERSIDE OF THE BASE PLATES AND SIDE FACES OF SLOTTED HOLES SHALL BE PAINTED WITH TWO PACK SURFACE TOLERANT EPOXY PAINT WITH A MINIMUM DRY FILM THICKNESS OF 100µm.
THE SLOPE OF THE CONCRETE AND STEEL POST EXTERNAL FACE IS TO BE DETERMINED ACCORDING TO URBAN DESIGN REQUIREMENTS, BUT NOT EXCEED 1 IN 10 (5.7°).

APPROVED FOR USE W. Ariyaratne DIRECTOR BRIDGES AND STRUCTURES 21.12.2018 DATE	NSW GOVERNMENT Transport Roads & Maritime Services SEND FEEDBACK ON THIS STANDARD DRAWING TO: standardbridgedrawings@rms.nsw.gov.au EDMS No DS2018/001771 A1	STANDARD DRAWING TRAFFIC BARRIERS MEDIUM PERFORMANCE LEVEL BARRIER STANDARD SHAPES	STATUS ISSUED ISSUE DATE DEC 2018 REVISION ISSUE 1 STANDARD DRAWING No B0505

© COPYRIGHT ROADS AND MARITIME SERVICES 2018