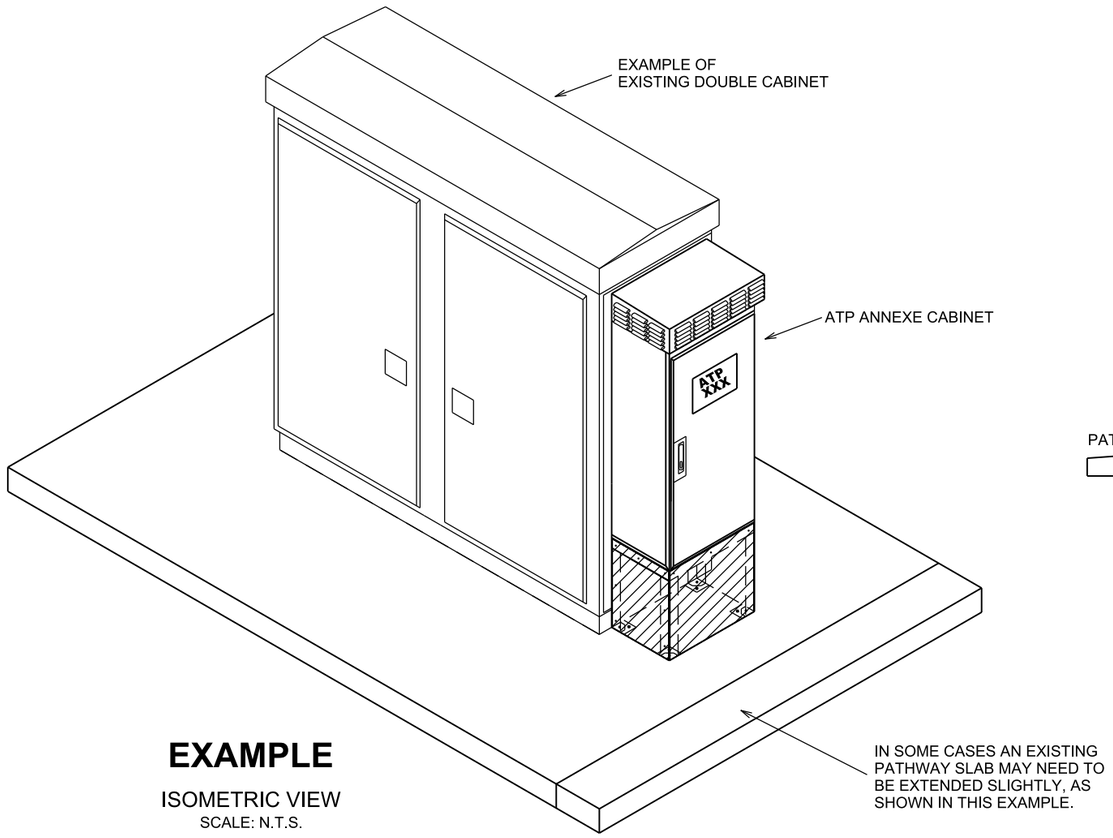

EXAMPLE

ISOMETRIC VIEW

SCALE: N.T.S.

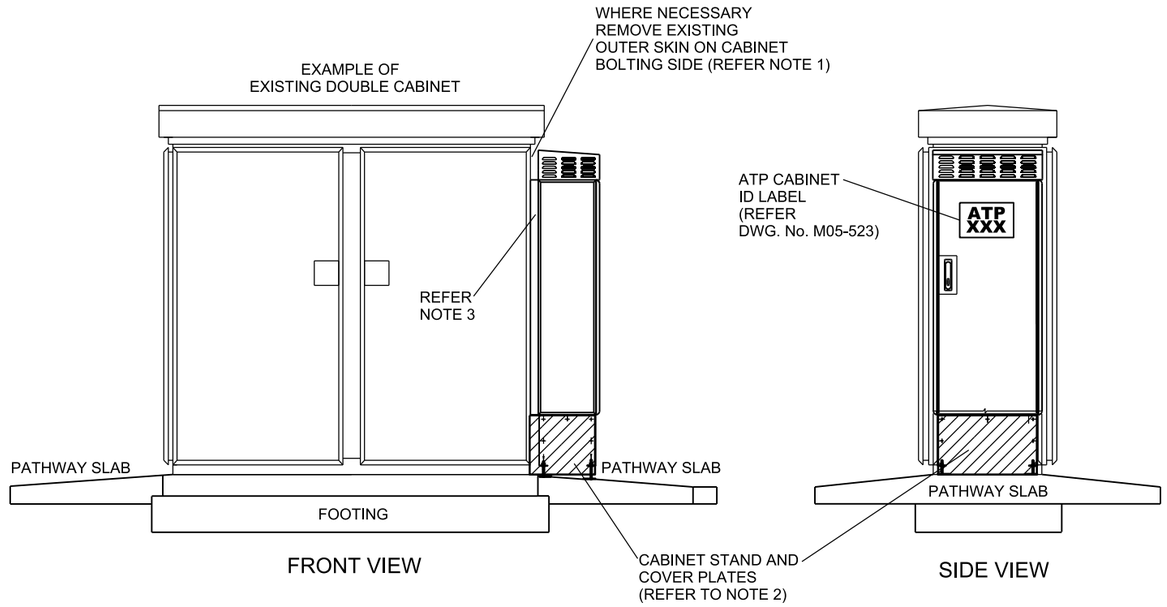

EXAMPLE 1

ATP CABINET SHOWN
ATTACHED TO EXISTING
CABINET

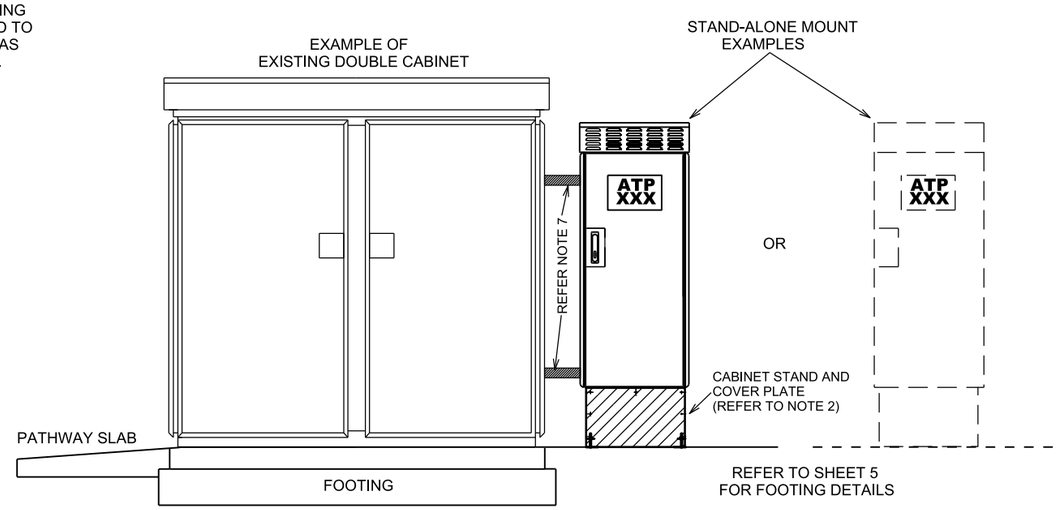

EXAMPLE 2

ALTERNATIVE ATP CABINET
STAND-ALONE INSTALLATIONS

NOTES:

1. REMOVE STEEL OUTER SKIN ON EXISTING CABINET ONLY WHERE NECESSARY (ON LEU CABINET MOUNTING SIDE)
2. REFER TO DRAWING M05-537 FOR CABINET, STAND AND COVER PLATE FABRICATION DETAILS.
3. A SPACER FRAME BRACKET IS TO BE FITTED BETWEEN EXISTING CABINET AND THE ANNEXE CABINET AS REQUIRED (REFER TO DWG. No. M05-540 FOR FABRICATION DETAILS).
4. WHERE THE REAR OF AN ANNEXE CABINET IS EXPOSED (AS IN EXAMPLE 2) AN OUTER REAR COVER WILL BE REQUIRED TO BE FITTED, REFER TO DWG. No. M05-537 FOR DETAILS.
5. WHERE THE SIDE OF AN ANNEXE CABINET IS PLACED CLOSE TO A WALL/CABINET AS SHOWN IN EXAMPLE 2, THE ANNEXE CABINET SIDE COVER MUST NOT BE REMOVED.
6. WHERE ANNEXE CABINETS ARE MOUNTED SIDE BY SIDE WITH THEIR BACKS AGAINST A BRICK/CONCRETE WALL :
   - WHERE POSSIBLE ENSURE THAT THEY ARE SPACED APART BY AT LEAST 200mm TO IMPROVE SIDE PANEL AIR FLOW.
   - A SPACER FRAME BRACKET IS TO BE FITTED BETWEEN THE REAR OF THE ANNEXE CABINET AND THE BRICK/CONCRETE WALL. REFER TO DWG. No. M05-540 FOR FABRICATION DETAILS.
7. WHERE ANNEXE CABINETS ARE STAND-ALONE MOUNT, CONDUIT(S) MAY BE FITTED (AS SHOWN) BETWEEN THE EXISTING STRUCTURE AND THE ANNEXE CABINET PROVIDING THAT THE GAP BETWEEN ANNEXE CABINET AND STRUCTURE DOES NOT EXCEED 300mm. OTHERWISE CONDUITS WILL BE REQUIRED TO BE INSTALLED UNDERGROUND.

VERSION	DESCRIPTION	DATE	DRAWN	REVIEWED	VERIFIED	APPROVED
D	LOUVRES ALTERED. NOTES UPDATED. SLAB DETAIL ADDED.	20.8.13	J.F.	J.F.	A.N.	W.A.
C	DRAWING TITLE & LOUVRES ALTERED, SHEET 5 ADDED.	31.10.12	BMC	J.F.	A.N.	W.A.
B	CABINET STAND AND COVER PLATE ADDED	03.10.12	D.S.	J.F.	A.N.	W.A.
A	DRAWING UPDATED	02.05.12	D.S.	J.F.	A.N.	W.A.

This drawing and the information contained thereon have been created solely for a particular purpose and client. This is protected by copyright. You may not reproduce any of it in any form without the written permission of Rail Corporation New South Wales. If you do, you may have to pay damages to Rail Corporation New South Wales or you may be prosecuted. ©

ALL DIMENSIONS IN MILLIMETRES

AS 1100 THIRD ANGLE PROJECTION

GENERAL TOLERANCES
LINEAR:
< 1000 ± 0.5mm
≥ 1000 ± 3mm
RADIAL:
< 500 ± 0.25mm
≥ 500 ± 1.5mm
ANGULAR: ± 30'

RailCorp
SIGNALS
Chief Engineers Division

SIGNAL DESIGN

EDMS No. SG0174161

cad

DO NOT AMEND MANUALLY

ATP LEU DOUBLE SKIN ANNEXE CABINET
INSTALLATION ARRANGEMENT

DESIGNED	DRAWN	REVIEWED	VERIFIED	APPROVED
K.FOO	K.FOO	J.FIRMSTONE	G.HOCKINGS	P.ZAMMIT
DATE 5-8-11	SCALE NTS	DRG. No. M05-536	SHEET 1 OF 5	REV. No. D

DF 390×277

File Plotted IP_PWP:d0938775\SG_0174161.dgn
Plot Date & Time 26-AUG-2022 12:35
Plotted by morlic

CABINET BOLTING ASSEMBLY DIAGRAM

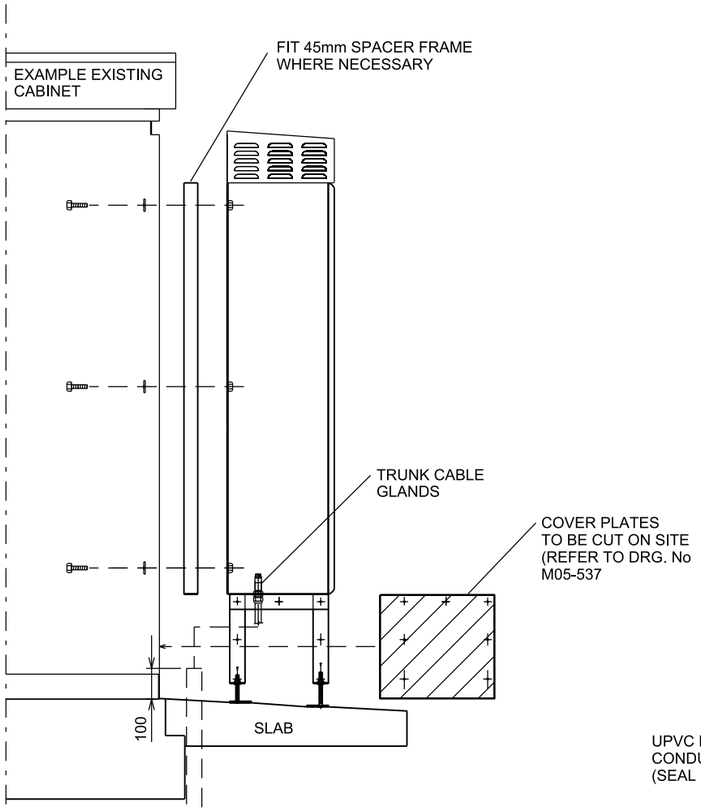

SIDE VIEW

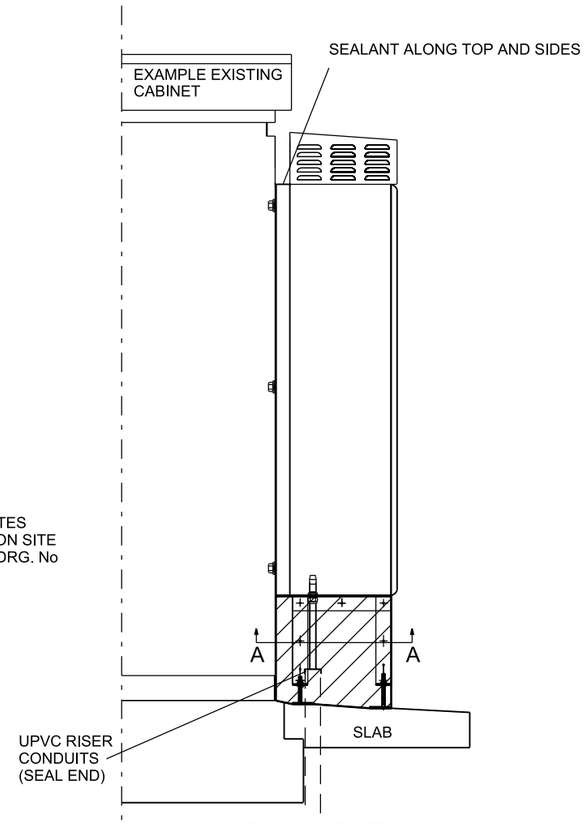

EXAMPLE 1
SIDE VIEW

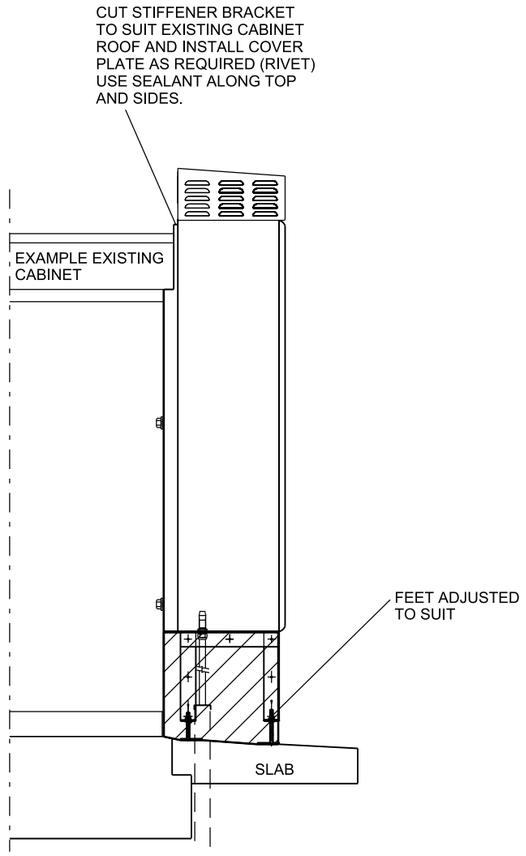

EXAMPLE 2
SIDE VIEW

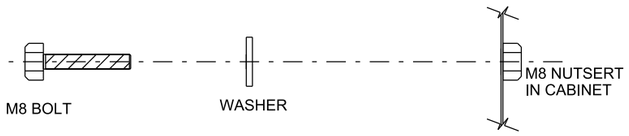

BOLTING ASSEMBLY DIAGRAM

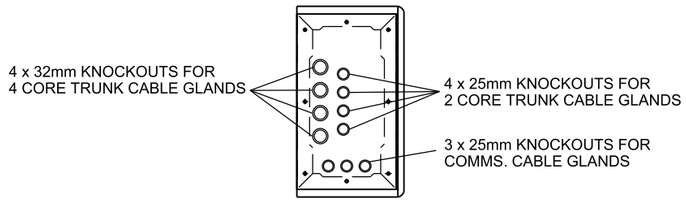

VIEW A-A

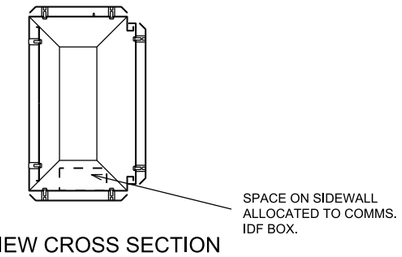

TOP VIEW CROSS SECTION

NOTES:

1. PAINT ALL CUT EDGES OF MILD STEEL WITH A CORROSION INHIBITOR.

VERSION	DESCRIPTION	DATE	DRAWN	REVIEWED	VERIFIED	APPROVED
D	SLAB DETAIL UPDATED. LOUVRES DETAIL UPDATED.	20.8.13	J.F.	J.F.	A.N.	W.A.
C	DRAWING TITLE & LOUVRES ALTERED, VIEW A-A REVISED SHT 5 ADDED.	31.10.12	BMC	J.F.	A.N.	W.A.
B	CABINET STAND AND COVER PLATE ADDED	03.10.12	D.S.	J.F.	A.N.	W.A.
A	DRAWING UPDATED	02.05.12	D.S.	J.F.	A.N.	W.A.

This drawing and the information contained thereon have been created solely for a particular purpose and client. This is protected by copyright. You may not reproduce any of it in any form without the written permission of Rail Corporation New South Wales. If you do, you may have to pay damages to Rail Corporation New South Wales or you may be prosecuted. ©

ALL DIMENSIONS IN MILLIMETRES

AS 1100 THIRD ANGLE PROJECTION

GENERAL TOLERANCES
LINEAR:
< 1000 ± 0.5mm
≥ 1000 ± 3mm
RADIAL:
< 500 ± 0.25mm
≥ 500 ± 1.5mm
ANGULAR: ± 30'

SIGNAL DESIGN

cad

RailCorp
SIGNALS
Chief Engineers Division

EDMS No. SG0174162

DO NOT AMEND MANUALLY

ATP LEU DOUBLE SKIN ANNEXE CABINET INSTALLATION ARRANGEMENT

DESIGNED	DRAWN	REVIEWED	VERIFIED	APPROVED
K.FOO	K.FOO	J.FIRMSTONE	G.HOCKINGS	P.ZAMMIT
DATE 5-8-11	SCALE 1:20	DRG. No. M05-536	SHEET 2 OF 5	REV. No. D

DF 390x277

File Plotted |P_PWP d0938775\SG_0174162.dgn
Plot Date & Time 26-AUG-2022 12:35
Plotted by morlic

CABLE ACCESS ASSEMBLY DIAGRAM

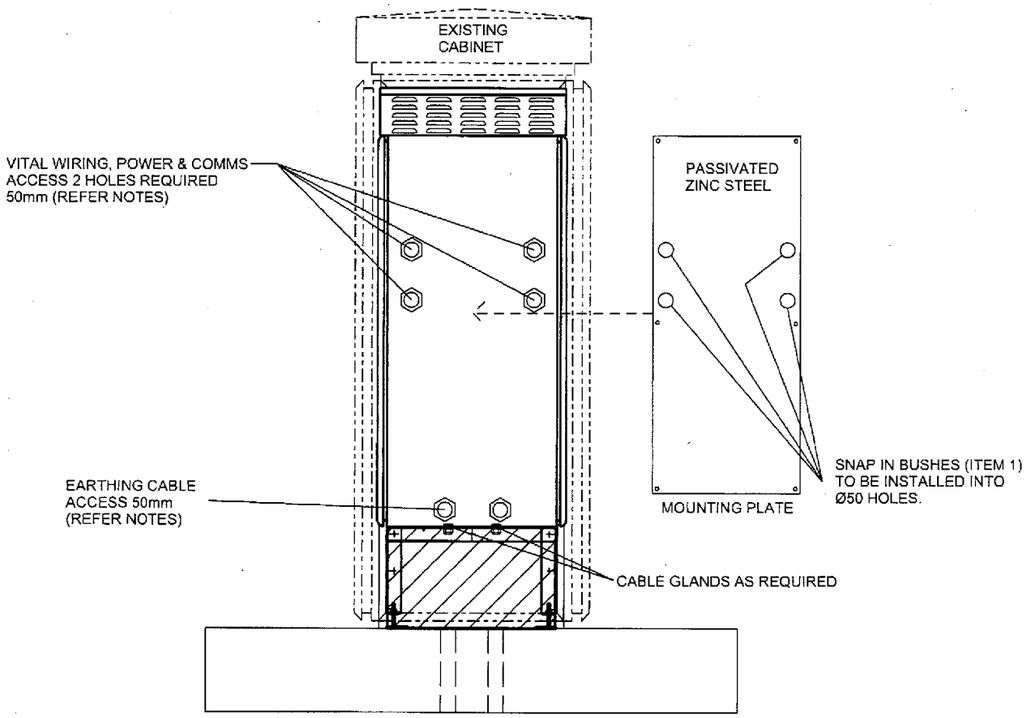

FRONT VIEW (WITH MOUNTING PLATE REMOVED)
CABLE ACCESS HOLES
SCALE: 1:20

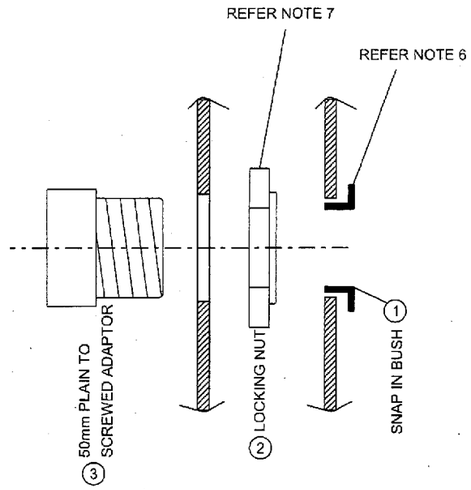

50mm CABLE ACCESS ASSEMBLY

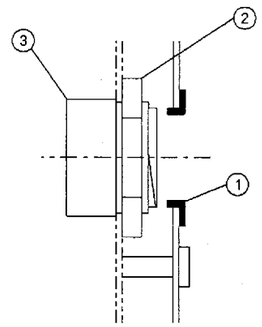

SIDE VIEW AT 50mm CABLE ENTRYS

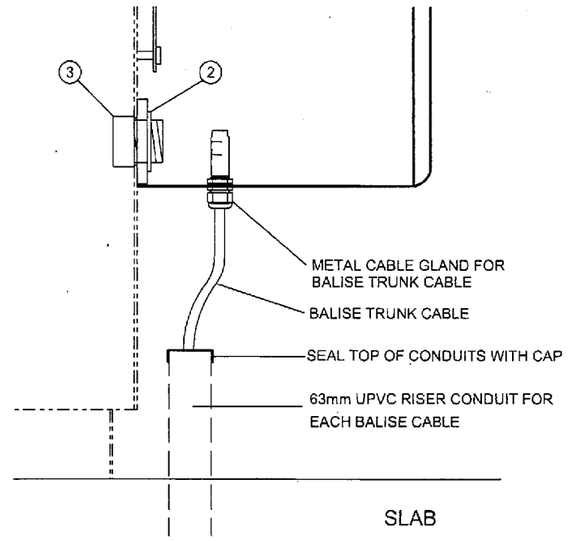

LOWER SIDE VIEW
SCALE: 1:10

NOTES:

1. CABLE ACCESS HOLES TO BE PUNCHEDTHROUGHT EXISTING CABINET WALLS ON SITE.
2. EARTH CABLES TERMINATED ON MOUNTING PLATE. CABLE ENTRY TO BE DETERMINED ON SITE.
3. ACID FREE SILICON SEALANT TO BE APPLIED AROUND & INSIDE PASS THROUGH CONDUITS TO SEAL CABLE ENTRIES.
4. WIRING AND COMMS ACCESS WITH POSSIBLE ENTRIES FOR: 2 ENTRIES REQUIRED, 1 FOR VITAL WIRING AND 1 FOR FUTURE COMMS.
5. FIT SNAP IN BUSHES TO 50mm HOLES IN MOUNTING PLATE.
6. GLUE LOCKING NUT TO INSIDE FACE OF CABINET OVER Ø52 HOLES AND THEN SCREW ADAPTOR FROM INSIDE OF EXISTING CABINET TO LOCKING NUT.
7. FIT THREADED 50mm PLUGS INTO UNUSED HOLES

ITEM	DESCRIPTION	SUPPLIER	STOCK CODE	QTY/PLUG	PART NUMBER
3	50mm PLAIN TO SCREWED ADAPTOR	CLIPSAL		6	SC263/50
2	50mm BLACK NYLON NUT	FLEXICON		6	LM50-NB
1	50mm BLACK SNAP IN BUSH	CABAC		4	NSB50

VERSION	DESCRIPTION	DATE	DRAWN	REVIEWED	VERIFIED	APPROVED
E	REMOVED REFERENCE TO NOTE 5 RE RISER CONDUIT	21.9.17	J.F.			
D	LOUVRES DETAIL AND NOTE 3 UPDATED.	20.8.13	J.F.	J.F.	A.N.	W.A.
C	CABLE ACCESS ASSEMBLY & LOUVRES ALTERED, ITEM LIST & SHEET 5 ADDED.	07.11.12	BMC	J.F.	A.N.	W.A.
B	CABINET STAND AND COVER PLATE ADDED	03.10.12	D.S.	J.F.	A.N.	W.A.

GENERAL TOLERANCES
LINEAR: < 1000 ± 0.5mm; ≥ 1000 ± 3mm
RADIAL: < 500 ± 0.25mm; ≥ 500 ± 1.5mm
ANGULAR: ± 30'

NSW GOVERNMENT | Transport for NSW

SIGNAL DESIGN

EDMS No. SG0174163

cad

DO NOT AMEND MANUALLY

This drawing and the information contained thereon have been created solely for a particular purpose and client. This is protected by copyright. You may not reproduce any of it in any form without the written permission of Transport for New South Wales. If you do, you may have to pay damages to Transport for New South Wales or you may be prosecuted. ©

ALL DIMENSIONS IN MILLIMETRES

AS 1100 THIRD ANGLE PROJECTION

ATP LEU DOUBLE SKIN ANNEXE CABINET
INSTALLATION ARRANGEMENT

DESIGNED	DRAWN	REVIEWED	VERIFIED	APPROVED
K.FOO	K.FOO	J.FIRMSTONE	G.HOCKINGS	P.ZAMMIT
DATE 5-8-11	SCALE NTS	DRG. No. M05-536	SHEET 3 OF 5	REV. No. E

DF 390x277

File Plotted $$$$$$$$$$$$$$DGN$SPECIFICATION$$$$$$$$$$$$$
Plot Date & Time $$$$$$$$YTIME$$$$$$
Plotted by $USERNAME$

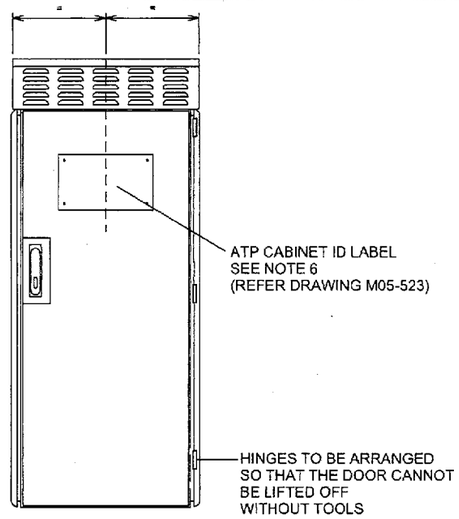

FULL FRONT VIEW
(STANDARD ARRANGEMENT
RH HINGED)

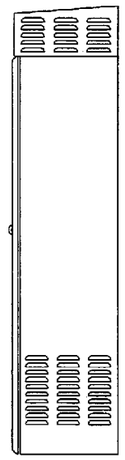

SIDE VIEW
(SIDE & REAR COVERS OFF)

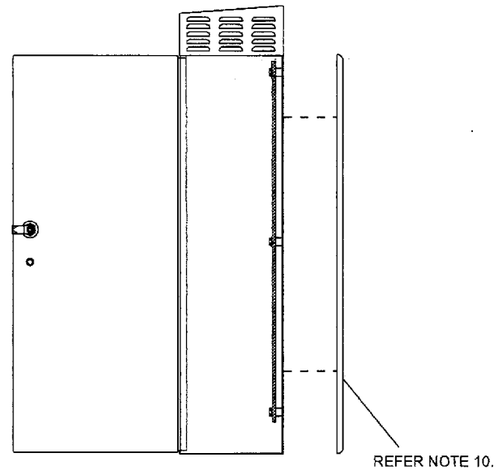

SIDE VIEW

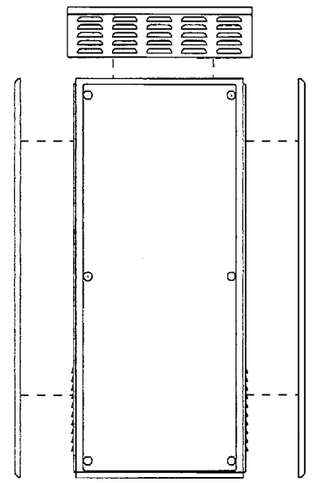

FULL FRONT
(VIEW COVER OFF)

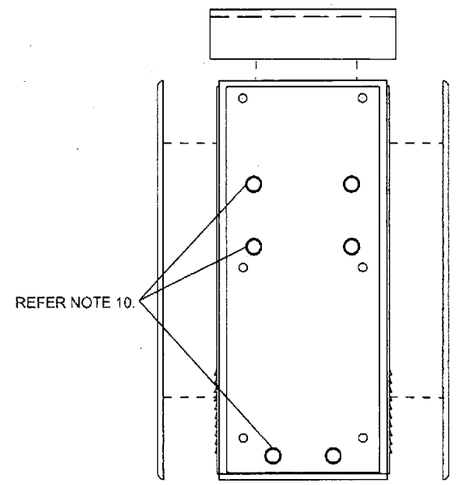

FULL REAR
(VIEW COVER OFF)

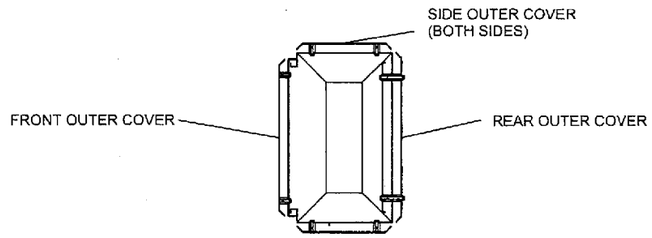

PLAN VIEW SHOWING OUTER COVERS

NOTES:

1. DOUBLE SKIN LEU CABINET WITH PASSIVE VENTILATION.
2. PASSIVE VENTILATION DESIGN TO DISSIPATE 70W.
3. LEU ENCLOSURE DESIGN IN ACCORDANCE TO TMGG-1520 TEMPERATURE CONTROL GUIDELINES.
4. WIRING PASS THROUGH LOCATION WILL BE DETERMINED ON SITE (EARTHING AND VITAL WIRING).
5. PADLOCK SHALL BE RAILCORP FALCON 4 STOCK CODE: 1745215.
6. ATP CABINET LABEL TO BE MECHANICALLY SECURED.
7. MICRO DOOR SWITCH TO BE PLACED IN SUITABLE AREA AVOIDING OBSTRUCTION. REFER TO DRAWING No. M05-547 FOR MICROSWITCH AND LIGHT DETAILS.
8. INSTALL ONE 50mm HD WHITE COMMUNICATIONS CONDUIT WITH DRAW WIRE/CORD AT LEAST 1m PAST CONCRETE SLAB BURIED NOMINAL 1m DEEP AND MARK DETAILS ON DETAIL SITE SURVEY (DSS). CAP BOTH ENDS.
9. FOR STAND-ALONE OPTION, REFER TO SHEET 5 FOR FOUNDATION GUIDELINES.
10. REAR OUTER COVER ONLY REQUIRED WHERE CABINET IS STAND-ALONE AND 50mm HOLES TO BE FITTED WITH SCREW PLUGS OR HOLES NOT INSTALLED.

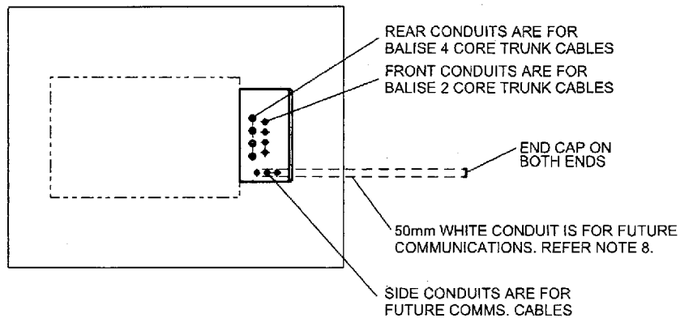

PLAN VIEW RISER CONDUITS
N.T.S.

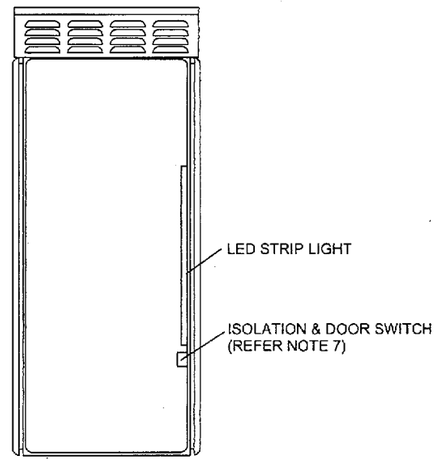

FRONT VIEW
(DOOR REMOVED)

VERSION	DESCRIPTION	DATE	DRAWN	REVIEWED	VERIFIED	APPROVED
E	FUTURE COMMS WHITE CONDUIT WAS 63mm	21.9.17	J.F.			
D	LOUVRES DETAIL UPDATED.	20.8.13	J.F.	J.F.	A.N.	W.A.
C	DRAWING TITLE, LOUVRES, NOTE 12 & PLAN VIEW RISER CONDUITS ALTERED. NOTE 13, SHEET 5 & REAR OUTER COVER ADDED.	31.10.12	BMC	J.F.	A.N.	W.A.
B	CABINET STAND AND COVER PLATE ADDED	03.10.12	D.S.	J.F.	A.N.	W.A.

GENERAL TOLERANCES
LINEAR:
< 1000 ± 0.5mm
≥ 1000 ± 3mm
RADIAL:
< 500 ± 0.25mm
≥ 500 ± 1.5mm
ANGULAR: ± 30'

NSW GOVERNMENT | Transport for NSW

SIGNAL DESIGN

EDMS No. SG0174164

cad

DO NOT AMEND MANUALLY

ATP LEU DOUBLE SKIN ANNEXE CABINET INSTALLATION ARRANGEMENT

DESIGNED	DRAWN	REVIEWED	VERIFIED	APPROVED
K.FOO	K.FOO	J.FIRMSTONE	G.HOCKINGS	P.ZAMMIT
DATE 5-8-11	SCALE NTS	DRG. No. M05-536	SHEET 4 OF 5	REV. No. E

This drawing and the information contained thereon have been created solely for a particular purpose and client. This is protected by copyright. You may not reproduce any of it in any form without the written permission of Transport for New South Wales. If you do, you may have to pay damages to Transport for New South Wales or you may be prosecuted. ©

ALL DIMENSIONS IN MILLIMETRES

AS 1100 THIRD ANGLE PROJECTION

DF 390x277

File Plotted $$$$$$$$$$$$$$$DGN$SPECIFICATION$$$$$$$$$$$$$$$
Plot Date & Time $$$$$$$$SYTIME$$$$$$$
Plotted by $USERNAME$

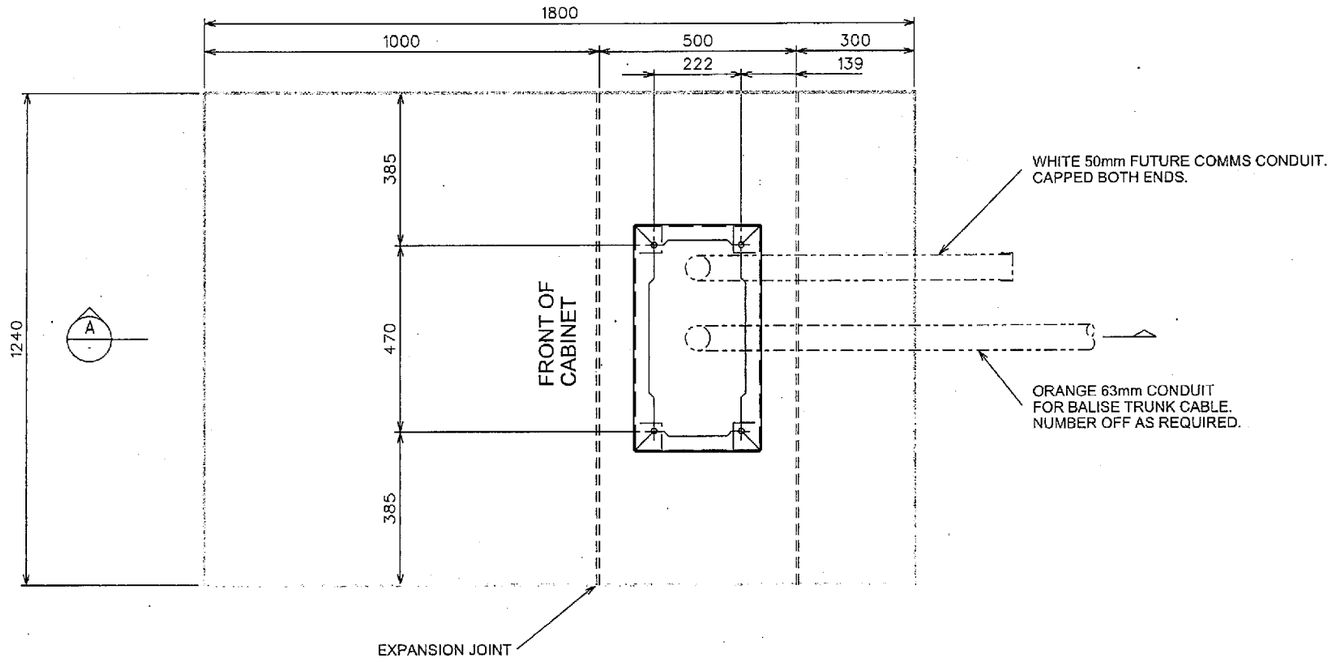

PLAN VIEW ON STAND-ALONE CABINET FOOTING

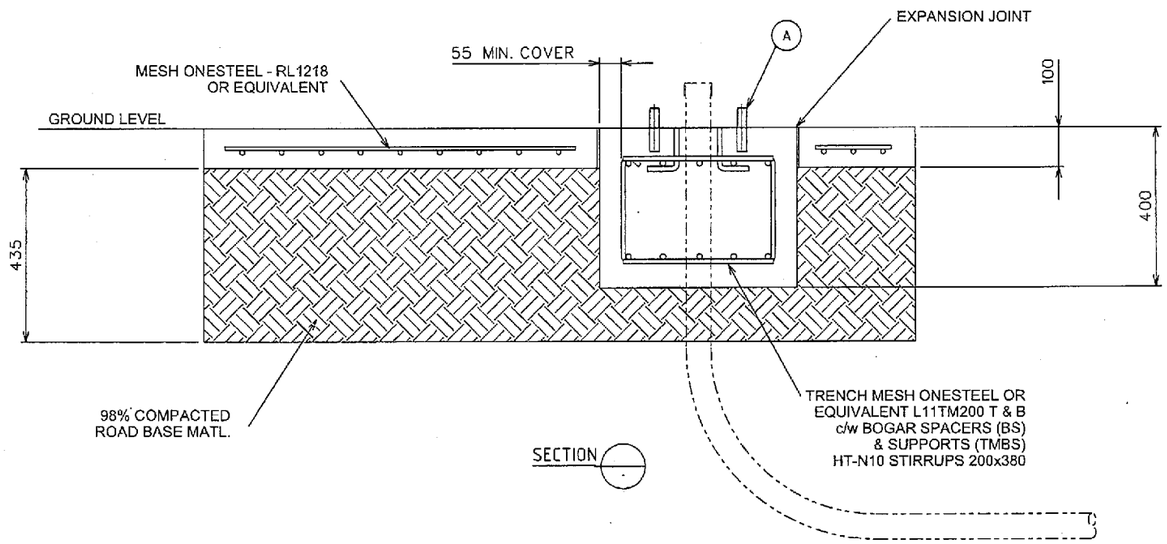

CONCRETE NOTES:

ALL CONCRETE MATERIALS AND CONSTRUCTION SHALL BE IN ACCORDANCE WITH AS3600.
SLAB & FOOTINGS MINIMUM COMPRESSIVE STRENGTH f'c SHALL BE 32MPa, AT 28 DAYS.
ALL PADS TO BE FINISHED WITH A SLOPE AWAY FROM CABINET FOR WATER RUN OFF.

NOTES:

DIRECTION OF CONDUITS TO SUIT SITE REQUIREMENTS & LOCATION.

No. OFF	ITEM	DESCRIPTION	REMARKS	MASS Kg
4	A	M10 x 100 LONG DYNABOLT S.S. (RAMSET DP12100SS) OR EQUIVALENT-		

VERSION	DESCRIPTION	DATE	DRAWN	REVIEWED	VERIFIED	APPROVED
B	FUTURE COMMS WHITE CONDUIT WAS 63mm	21.9.17	J.F.			

GENERAL TOLERANCES
LINEAR:
< 1000 ± 0.5mm
≥ 1000 ± 3mm
RADIAL:
< 500 ± 0.25mm
≥ 500 ± 1.5mm
ANGULAR: ± 30'

This drawing and the information contained thereon have been created solely for a particular purpose and client. This is protected by copyright. You may not reproduce any of it in any form without the written permission of Transport for New South Wales. If you do, you may have to pay damages to Transport for New South Wales or you may be prosecuted. ©

ALL DIMENSIONS IN MILLIMETRES

AS 1100 THIRD ANGLE PROJECTION

NSW GOVERNMENT Transport for NSW

SIGNAL DESIGN

EDMS No. SG0406924

cad DO NOT AMEND MANUALLY

ATP LEU DOUBLE SKIN ANNEXE CABINET INSTALLATION ARRANGEMENT

DESIGNED	DRAWN	REVIEWED	VERIFIED	APPROVED
	B.CASSELL			

DATE	SCALE	DRG. No.	SHEET	REV. No.
15.11.12	1:20	M05-536	5 OF 5	B

DF 390x277

Plotted by $USERNAME$ Plot Date & Time $$$$$$$$TIME$$$$$$$ File Plotted $$$$$$$$$$DGN$SPECIFICATION$$$$$$$$$$$$$