TS 01267:1.0

CRN SC 026

Specification

Design of Frauscher FAdC Axle Counters

Issue date: 30 January 2022

Effective date: 30 January 2022

© State of NSW through Transport for NSW 2022

Disclaimer

This document has been prepared by Transport for NSW (TfNSW) specifically for its own use and is also available for use by NSW public transport agencies for transport assets.

Any third parties considering use of this document should obtain their own independent professional advice about the appropriateness of using this document and the accuracy of its contents. TfNSW disclaims all responsibility and liability arising whether directly or indirectly out of or in connection with the contents or use of this document.

TfNSW makes no warranty or representation in relation to the accuracy, currency or adequacy of this document or that the document is fit for purpose.

The inclusion of any third party material in this document, does not represent an endorsement by TfNSW of any third party product or service.

For queries regarding this document, please email Transport for NSW Asset Management Branch at standards@transport.nsw.gov.au or visit www.transport.nsw.gov.au

© State of NSW through Transport for NSW 2022

Document information

Owner: Director Signals & Control Systems Engineering, AMB, SER

Mode Heavy rail

Discipline Signals and control systems

Document history

Revision	Effective date	Summary of changes
Version 1.4	30 January 2022	TfNSW template applied.
Version 2.0	30 January 2022	Internal revision only – no change.
Version 3.0	30 January 2022	First full UGLRL release.

© State of NSW through Transport for NSW 2022

Table of contents

1. Reference Documents 5

2. Design Goals 6

3. Hardware System Configuration 6

3.1. Power Supply Configuration 6

3.2. Axle Counter Indoor Equipment Configuration 6

3.3. Cables and Wiring 7

3.4. Relay Noise Suppression 7

3.5. Axle Counter Outdoor Equipment Configuration 7

3.6. Use of I/O Transmission 8

3.7. Connection to Interlockings 8

3.8. Connection to FdS System Logger 9

3.9. Communication Link Configuration 9

3.10. Equipment Housing and Cable Route Configuration 10

4. Configuration File Compilation Process 10

4.1. Design Process 11

4.2. System Limitations 11

4.3. Configuration File Header 11

5. Setting to Work 13

6. Circuit Design 13

6.1. Axle Counter Overview 15

6.2. Cardfile Design – Front and Rear 16

6.3. Power Supply and Ethernet Connections, including FdS where used. 17

6.4. Trackside Equipment Connection arrangements 18

6.5. R1 Relay outputs (Quad and Single), Reset inputs, Power and CAN Bus jumpering. 19

6.6. Axle Counter Reset Switch arrangement – Sheet 1 20

6.7. Axle Counter Reset Switch arrangement – Sheet 2 21

6.8. Axle Counter Pre-Reset / Reset wiring on I/O EXB 22

6.9. DIP Switch settings sheet 1 – General Layout 23

6.10. DIP Switch settings sheet 2 – Actuals based upon Design 24

6.11. DIP Switch settings sheet 3 – Actuals based upon Design 25

6.12. Redundant DC Power Supply Arrangements 26

© State of NSW through Transport for NSW 2022

1. Reference Documents

The following documents provide supporting information or referenced information to that provided by this document.

Frauscher Documents

Design and Planning Manual – Frauscher Advanced Counter FAdC® 2.1.x.x-1 & FAdC® 2.1.x.x-3	D20001-4
Installation / Operation - Frauscher Advanced Counter FAdC® 2.1.x.x-1 & FAdC® 2.1.x.x-3	D20002-3
Maintenance - Frauscher Advanced Counter FAdC® 2.1.x.x-1 & FAdC® 2.1.x.x-3	D20003-3
Frauscher Diagnostic System FDS001 for FAdC® and FAdC®i	D20006-2
Brief description – Frauscher Advanced Counter FAdC® R2	D21000-1
System Documentation – Frauscher Advanced Counter FAdC R2	D21001-2
Brief description Advanced Service Display ASD101	D21004-1
Design and application of supervisor sections for axle counting system FAdC® R2	D4181-1
Reset options for the axle counting system FAdC® R2	D4182-1
Design and application of Counting Head Control for axle counting system FAdC® R2	D4183-1

CRN Documents

FAdC Configuration File Control, FAdC Configuration file Design and Testing	CRN SQ 001 - 14
Re-Testing of FAdC Configuration files	CRN SQ 001 – 27
Checking of FAdC Circuits and Configuration files	CRN SQ 001 – 29
Signals Power Designs	CRN SQ 001 – 51
Proposal for Standard Specification alterations to address issues with 415V signalling power distribution	
Surge protection Installation Guideline	
Ancillary Equipment Temperature rating Installation Guideline	
CRN Engineering Standards	

The Principal Signal & Communications & Network Control Engineer upon request may provide the CRN documents.

© State of NSW through Transport for NSW 2022

2. Design Goals

This section details a set of design goals and methods of achieving the design goals when designing the system configuration for particular installations.

The signalling system configuration must comply with:

- The CRN Signalling Engineering Standards.
- The Frauscher FAdC design and system manuals.
- Signalling design quality procedures.
- Signalling design guidelines.

To configure the FAdC axle counting system to meet the requirements

- As laid down in the Signalling Design Brief or other documents as supplied by UGLRL personnel.
- As described and mandated within the Frauscher system design documentation.
- To utilise the full capability of the system to improve overall reliability and reduce interference from 3rd parties having an effect on the overall system.

3. Hardware System Configuration

3.1. Power Supply Configuration

FAdC R1 arrangements shall be supplied and configured with single Power Supply Modules (PSC).

FAdC R2 arrangements can be configured for both single and redundant Power Supply Modules (PSC). Where redundant power supplies are stipulated in the Signal Design Brief and a single system is split across two or more backplanes, the PSCs may be located on separate backplanes with the power connections jumpered between them to provide redundancy.

Axle counter systems are to utilise a backup battery. The capacity of this battery shall allow autonomous operation of the axle counter system for

- 7 days where there is not a backup or no-break power supply. In these installations the failure of the mains supply shall be remotely alarmed and indicated.
- 8 hours where a backup or no-break power supply is available.

3.2. Axle Counter Indoor Equipment Configuration

The overvoltage protection board (BSI) shall be located as close as practicable to the point of entry of the incoming cables and connected to the signalling earth in accordance with the Frauscher documentation.

© State of NSW through Transport for NSW 2022

Axle counter indoor modular equipment wherever possible shall be installed within a single cardfile housing and may be spread across a number of backplanes depending upon the actual configuration of individual modules required to achieve the necessary system operation.

Where multiple cardfile housings are required they shall be of the same size for ease of installation mounting.

3.3. Cables and Wiring

Typically, all external cables between the location and the GAK are laid up as twisted pairs or star quad as per the Frauscher requirements.

Wiring connections between the ‘RSR1’ connection and the BSI inside the location shall be 7/0.50 mm^2 2 pair or ‘star quad’ shielded cable.

Wiring connections between the BSI and the trackside connection box (GAK) shall be 2 pair or ‘star quad’ shielded cable which has a maximum loop resistance of 250 ohm for RSR180 wheel sensor, which may be steel wire armoured (SWA) depending upon the method of cable installation. The conductor shall be determined by the length of the cable run and the cable’s physical properties. Refer to CRN SE 035 – Cables for Railway Signal Applications and CRN SC 021 – Cable Routes and Associated Civil Works.

Wiring connections between the RSR180 and the GAK shall be the moulded and attached cable supplied complete with the RSR180 wheel sensor. These are available in differing lengths.

Wiring connections between the plug couplers of the axle counter cardfile backplane and the wiring changeover termination strip is 24AWG as specified by Frauscher. This wiring may be part of a 4pr or similar cable for ease of installation.

Other internal location wiring shall meet the general requirements of signalling wires and cables as described in CRN SE 035 – Cables for Railway Signalling Applications.

3.4. Relay Noise Suppression

Relays generate electrical noise when they are de-energised. This electrical noise can interfere with the axle counter cardfile.

Relays that are controlled by an output circuit from an axle counter cardfile is to be snubbed with a 1N4007 diode fitted in the reverse direction across the coil. This method is suitable for 12 VDC, 24 VDC, and 50 VDC relays only and it may not be suitable for polarised circuits. Fitting the diode across the relay coil means that the relay cannot be AC immune.

3.5. Axle Counter Outdoor Equipment Configuration

Axle counter outdoor equipment shall be installed in accordance with the design documentation and with consideration given to access and egress routes within the rail corridor. Wherever

© State of NSW through Transport for NSW 2022

possible, the cable between the GAK and the wheel sensor should only extend from the rail to the lower edge of the ballast shoulder.

When installing the GAK foundation, care should be taken so that the track formation is not negatively affected by any excavation activities.

The cable from the GAK to the equipment location shall be buried or protected by an approved means in accordance with CRN SC 021 – Cable Routes and Associated Civil Works.

3.6. Use of I/O Transmission

Where there may be a requirement to transmit I/O information to and/or from remote axle counter cardfiles, the following is to be observed;

- Single, Dual and Quad modes cannot be intermixed on the same I/O-EXB as per the Frauscher requirements.
- Where Dual or Quad modes are used, the relay output is to have I/O-EXB switching contacts in both positive and negative legs of the coil circuit.
- Where the number of locations is small, separate I/O-EXBs are to be used to simplify wiring arrangements. For example, where a level crossing has a central location and 2 external locations that have separate remote axle counter cardfiles where I/O data is transmitted to the central location, then there shall be a I/O-EXB for each location, meaning that there will be a corresponding I/O-EXB for each location at the main location.
- Where the number of locations may be larger, I/O information may be ‘daisy chained’ from output to input of the same I/O-EXB to send the I/O data onwards to the next location along the communications network.

3.7. Connection to Interlockings

Where there may be a requirement to connect an axle counting system to a separate interlocking or control system, the following is to be observed;

- For relay or CBI systems where there is no Frauscher approved COM-xxx module, the interfacing shall be by relays. In this arrangement the relays provide galvanic isolation between the systems.
- For CBI systems where there is a Frauscher approved COM-xxx module, the interfacing may be by direct connection. In this arrangement there is no requirement for any interfacing relays as all I/O is passed across a network connection cable using a ‘Safe Ethernet’ protocol that conforms to SIL4 requirements.

© State of NSW through Transport for NSW 2022

3.8. Connection to FdS System Logger

The preferred connection to a FdS logging system is via Ethernet link from the COM-xxx or COM-AdC module within the axle counting system. The IP address for this unit shall for part of the configuration files. In situations where both E1 and E2 have been configured as Ethernet communication bearers, the FdS may be connected into the Ethernet system by way of a router, port multiplier or similar device.

Where installed in a location with 3G or other remote access, the FdS is to be able to be remotely accessed by maintenance personnel via the gateway IP address.

3.9. Communication Link Configuration

Where communication links are established so that remote axle counter cardfiles can effectively communicate, this may be achieved by a number of methods;

- Direct copper cable connection – typically where cardfiles are located in close proximity and CAT5 cabling arrangements do not exceed the industry standard distance.
- Fibre Optic Cable – via an approved modem or controlled network switch where redundant communication links are necessary.
- Radio based Transmission – where an approved point to point radio system is to be employed to provide the communication link. This equipment may add additional encryption information to improve the security of the data being transmitted. In every case the system must be able to be configured to manage the levels of data appropriate to the configuration being utilised.

Where redundancy is required both E1 and E2 ports on the COM-xxx or COM-AdC module are to be configured as active.

Patch leads to be used to connect E1 and/or E2 ports on the COM-xxx or COM-AdC module to another communication device are to be moulded CAT5 telecommunications cable using 24 AWG wire may be used for RS232 wiring within the location or building to a maximum length of 5 metres. The preferential colour is green.

Patch leads to be used to connect CAN buses between backplanes are to be moulded CAT5 or CAT6 telecommunications cables. The preferential colour is green.

Communications links must have galvanic isolation between the axle counter cardfile equipment and any external circuits. Opto-isolators, or transformers are normally used to provide galvanic isolation. Some communications equipment provides galvanic isolation.

Where there is no requirement for connections to be made in Ethernet ports E1 and/or E2 of the COM-xxx or COM-AdC module, blanking plugs shall be inserted into all unused Ethernet ports to protect against an inadvertent insertion of an ASD cable, which may result in the failure of the COM-xxx module.

© State of NSW through Transport for NSW 2022

3.10. Equipment Housing and Cable Route Configuration

Equipment housings and cable routes must comply with CRN Standards and Specifications.

Typically, the signalling location layout must provide:

- Segregation for wiring and equipment for surge protection.
- Layout of equipment and wiring for minimise coupling of electrical noise.
- Layout of equipment for ease of maintenance.
- Layout of equipment for temperature effects.

Positioning of cable routes needs to consider surge protection issues and proximity to High Voltage Earths for Earth Potential Rise (EPR) issues.

Duplicate communication link cables or diverse cables must be physically separated or have appropriate physical protection so that it is improbable that both cables are damaged in the one incident.

4. Configuration File Compilation Process

The files required to configure a FAdC cardfile shall be generated by utilising the Frauscher system design documentation. Templates may be used, but do not guarantee 100% conformance with system requirements. These files contain all the user variables that may be configured as part of an axle counter installation. These files are to be compiled on a text editor such as NOTEPAD or NOTEPAD++ and saved in an ASCII format so that there are no hidden control characters included within the file that will affect the process of generating a valid CRC number by the Frauscher Checksum Calculator (ACC).

There are distinct differences between the R1 and R2 releases, this is most apparent with the COM-xxx or COM-AdC module file.

- For FAdC R1 there are 2 unique files to configure the COM-xxx or COM-AdC module, typically identified by two distinct ID addresses.
- For FAdC R2 there is a single file to configure the COM-xxx or COM-AdC module.

Once the files have been generated and a valid CRC number added to the files along with the verifier information, they can be loaded onto the CF flash memory card in a folder entitled “CONFIG”. Once this memory card is inserted into the COM-xxx or COM-AdC module and the cardfile powered up, the files will be executed within the system to configure all modules in use.

For the comprehensive procedures to create the configuration files, reference should be made to the following documents;

- FAdC R1 - Frauscher Design and Planning Manual – Frauscher Advanced Counter FAdC® 2.1.x.x-1 & FAdC® 2.1.x.x-3 manual - D20001-4

© State of NSW through Transport for NSW 2022

- FAdC R2 - System Documentation – Frauscher Advanced Counter FAdC R2 D21001-2

The configuration files are to be designed in accordance with the Signal Design Quality Procedures CRN SQ 001 - 14.

Designers are to ensure that the configuration files are produced utilising the current approved Frauscher developed templates and CRC generation software.

In general, the configuration files are based on or derived from the Signalling Circuit Design Standards, Signalling Design Briefs and/or Frauscher requirements.

4.1. Design Process

The following steps should be followed when producing configuration files;

- The Designer identifies the system configuration requirements such as the axle counter modules, backplanes and cardfiles to be used, system interconnects (CAN bus and power), vital and non-vital I/O requirements, and axle counting requirements.
- The configuration files are created utilising a standard text editor to create the data file. It is recommended that NOTEPAD++ be used for this purpose. This file is given a filename extension of “ADC”.
- The Frauscher Checksum Calculator software is to be used to process the completed configuration files. The software calculates a CRC number and adds this to the end of each file processed and resaves the file with the same file name and extension. The Designer must then add the “verifier” information to each file and resave.
- Should there be a reserved word or formatting error the Checksum Calculator will return an error with a line number and not add a CRC to the end of the file. Logical errors are not detected, the configuration must be tested to ensure that the system operates as desired.

4.2. System Limitations

System cycle and response times may be adversely affected by Network delays, configured CAN bus timing and the like.

4.3. Configuration File Header

In addition to the standard templates supplied by Frauscher to persons who have undertaken the appropriate FAdC design training, the following additional information is to be inserted at the beginning of the file. This additional information allows tracking of changes to maintain where alterations to the system configuration are required.

© State of NSW through Transport for NSW 2022

```
//
// COUNTRY REGIONAL NETWORK
// LOCATION NAME - ANY COUNTRY TOWN
// LOCATION TYPE - LEVEL CROSSING
//
// FAdC AXLE COUNTING SYSTEM CONFIGURATION FILES
// CRC CHECKSUM VERSION : 1.01
// ==================================================================
// WARNING
// ALTERATION OF THIS FILE MAY COMPROMISE THE SAFE
// PERFORMANCE OF THIS PROGRAM AND THE AXLE COUNTER SYSTEM
// ==================================================================
// DESIGNED BY         ANDY DESIGNER
// COMPANY             ANY SIGNAL DESIGN COMPANY PTY LTD
// DATE                FEBRUARY 2016
// JOB NUMBER          CS16999
// JOB TITLE           UPGRADE TRAIN DETECTION TO AXLE COUNTER
// FILE NAME           C0001_00.ADC
// ==================================================================
// CURRENT REVISION NO. 005
// ==================================================================
// DATE                29 FEB 2016
// DESIGNED BY         ANDY DESIGNER
// REVIEWED BY         RALPH REVIEWER
// VERIFIED BY         VICCI VERIFIER
// APPROVED BY         ALISON APPROVER
// ==================================================================
// PROGRAM REVISIONS
// REV COMMENT                      NAME              DATE        TIME
// ------------------------------------------------------------------
// 001 INITIAL DESIGN               A.DESIGNER        19/03/2009  1324
// 002 ADD SENSORS                  A.DESIGNER        23/03/2009  1108
// 003 ADD I/O                      D.HELPER          09/04/2009  1008
// 004 MAIN UPDATE                  F.BLOGGS          15/04/2009  1229
// 005 ADD BARRIERS                 A.DESIGNER        18/04/2009  1047
// ==================================================================
// NOTES :
//
//
//
// ==================================================================
//
```

5. Setting to Work

Experience with setting to work FAdC systems has shown that many of the faults reoccur and having seen them before, they become more straightforward to identify. The following gives a description of some faults and the possible causes:

- Check the supply voltage. Boot up requires at least 19V to occur reliably.
- Evaluation board not calibrated
- Wheel sensor current not within specification
- Wheel sensor not mounted correctly
- Direction not configured correctly
- ID DIP switches do not correlate with the design
- FAdC R2 electronic coding missing
- Configuration file incorrect – wrong or no VERIFY, no CRC, VERIFY time before or equal to VERSION time etc.

In all instances personnel should refer to Frauscher FAdC R2 System documentation

- Chapter 7 – Commissioning
- Chapter 10 - Repair

6. Circuit Design

In order to provide consistency between applications the following guidelines are to be followed by designers. In many cases, the items are not absolutes, and if an alternative arrangement is proposed for a specific job, the Principal Signal & Communications & Network Control Engineer may approve a design waiver request.

The following sheets demonstrate the typical arrangements for interface wiring between axle counter cardfiles and other signal and power supply equipment.

Notes to accompany the following drawings

6.1 – The easiest design is to place the track evaluation IO-EXBs adjacent to AEBs 4 and 5 at the end backplane positions. When AEB 4 evaluates DXT and XT a fault at AEB4 or a faults of the individual wheel sensors (Q1, Q2 or Q3) will lead to occupied sections.

The layout diagram shall also include an “Axle Counter Control Table” that will indicate which wheel sensors make up each track and Supervisor section, plus which wheel sensors have Counting Head Control active.

Design Outcome – It is better to link IO-EXBs to AEBs where their own wheel sensor/s is/are part of the output section.

© State of NSW through Transport for NSW 2022

6.2 – Related to 6.1 above, this layout shows the non-preferred rack arrangement with the correct labelling of the cardfile – front and rear.

Design Outcome – The rack layout shall show the correct labelling conventions – front and rear.

6.3 – Where both COM-xxx or COM-AdC Ethernet ports are used, the FdS will be connected to the system via a network switch or similar router device.

Design Outcome – The configuration files will show the complete IP arrangement of where the diagnostic information will be routed to.

6.4 – Typical direct wired arrangement of wheel sensors

6.5 – The easiest design is to place the Fm relay in the final part of the circuit connecting R2 directly to the N24 bus. In this situation the Fm relay is still susceptible to interference through the N24 bus.

Design Outcome – It is better to place the Fm relay as shown so that both sides of the coil are switched through the Quad switching arrangement within the IO-EXB.

6.6, 6.7 and 6.8 – For FAdC R1, where a Supervisory Section (SV) is configured, the pre-reset / reset wiring must be provided to the portion of the AEB where the SV resides.

For FAdC R2, where multiple Supervisory Sections (SVs) may be configured, the pre-reset / reset wiring must be provided to the portion of the AEB where the master SV resides. Consideration may be given to adding other SV sections to be reset – this will be dependent upon the system layout and configuration and may be mandated by the Principal Signal & Communications & Network Control Engineer or the Signal Design Brief.

Design Outcome – There shall be no requirement for an independent set of pre-reset / reset contacts used to reset each AEB’s track sections. This will mean for a 3 track level crossing with a single SV configured, only a single switch will be required. The current practise of using an independent set of contacts to reset each track section will be discontinued. Where multiple SVs may be used, a single switch may still be used, paralleling AEB pre-reset / reset inputs as required. The individual track section indications will still be required to be shown in the reset box.

© State of NSW through Transport for NSW 2022

6.1. Axle Counter Overview

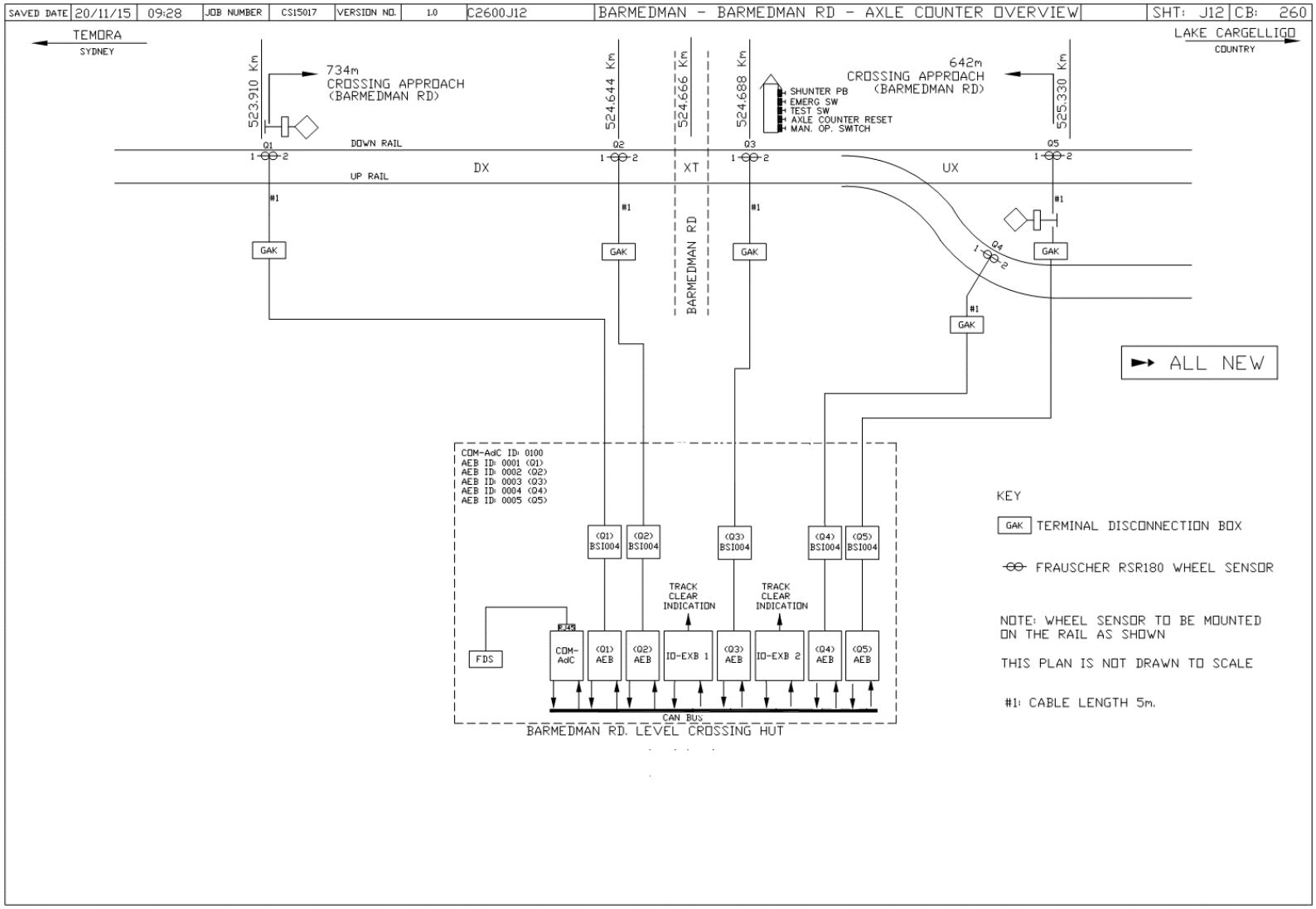

6.2. Cardfile Design – Front and Rear

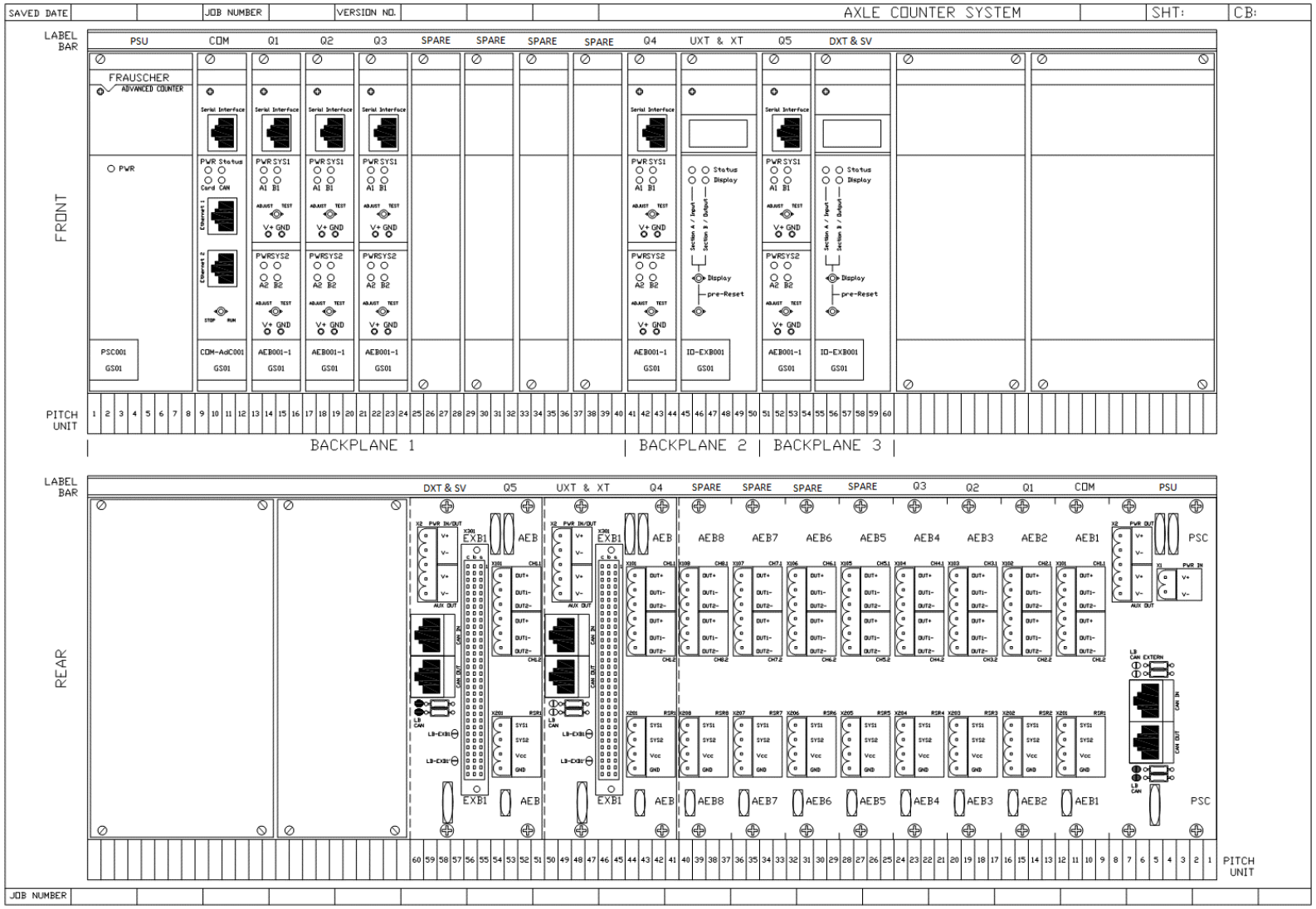

6.3. Power Supply and Ethernet Connections, including FdS where used.

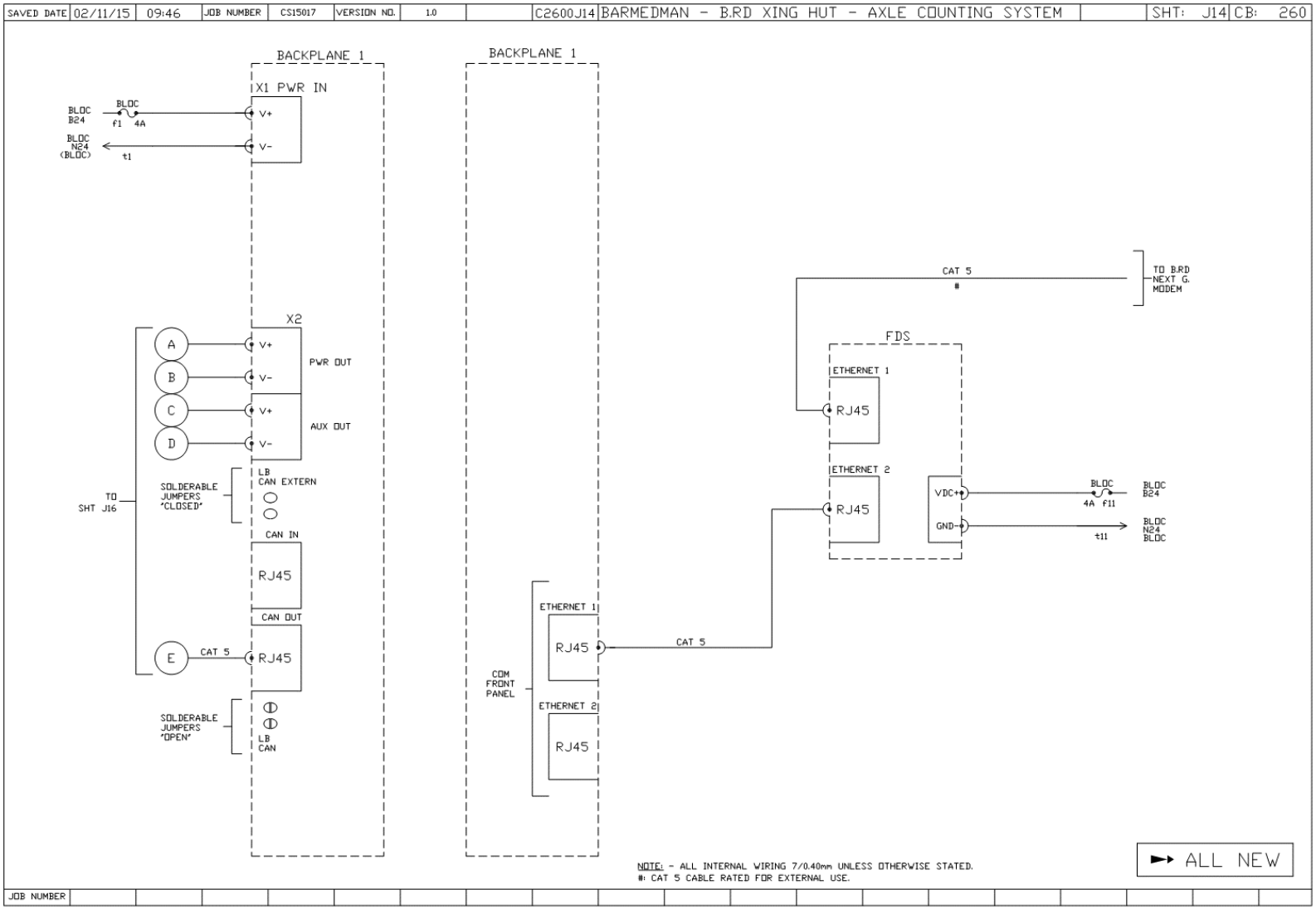

6.4. Trackside Equipment Connection arrangements

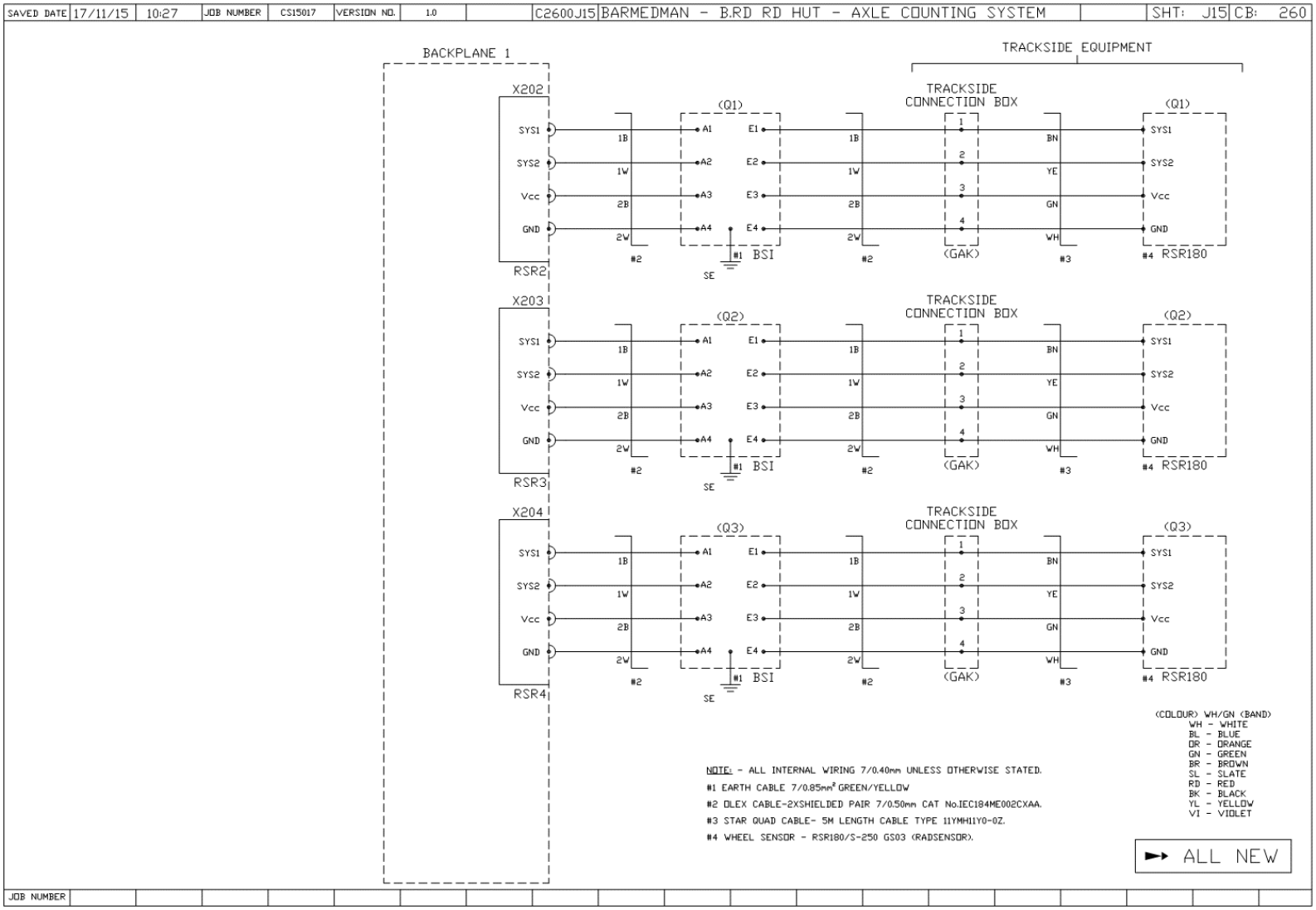

6.5. R1 Relay outputs (Quad and Single), Reset inputs, Power and CAN Bus jumpering.

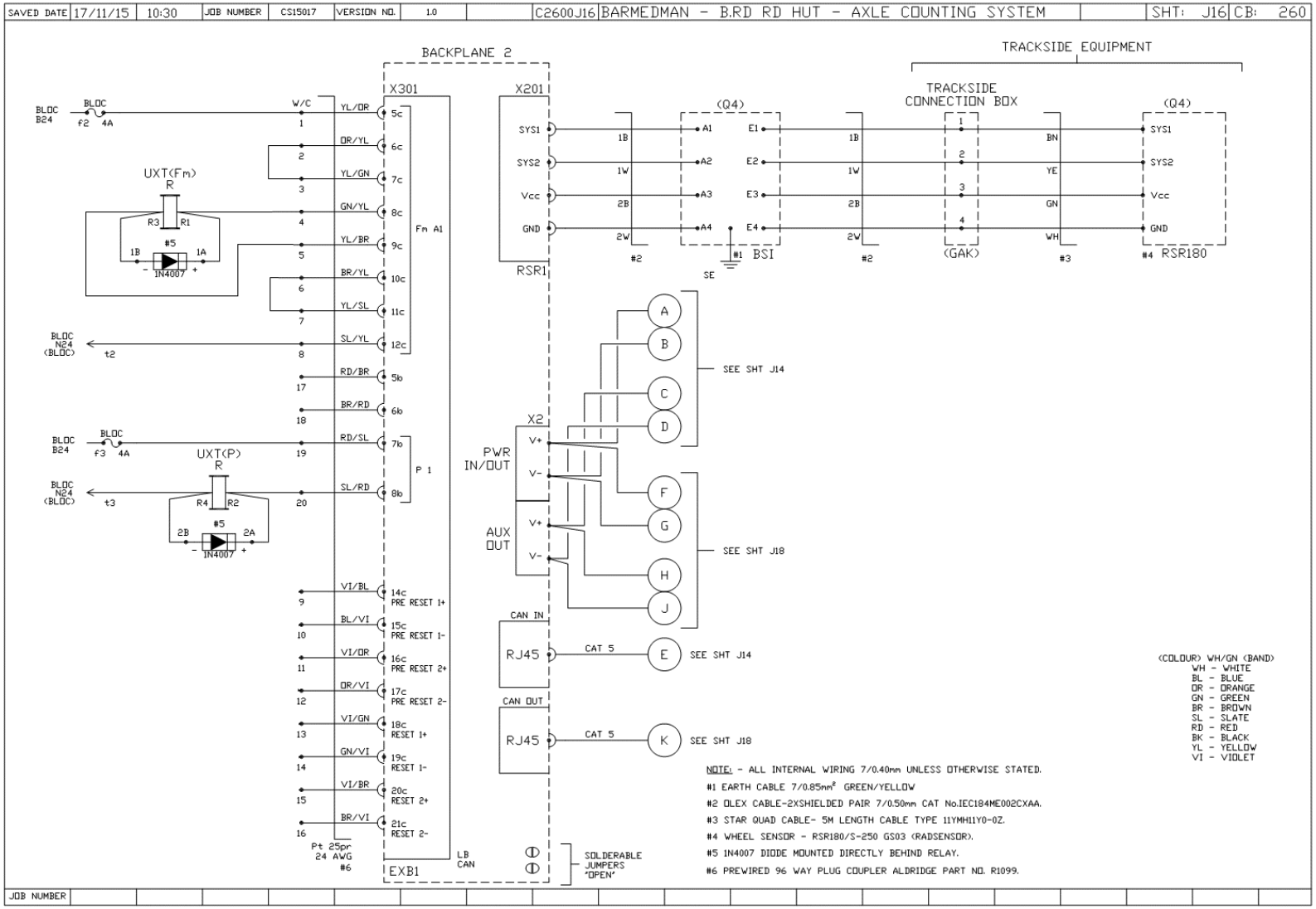

6.6. Axle Counter Reset Switch arrangement – Sheet 1

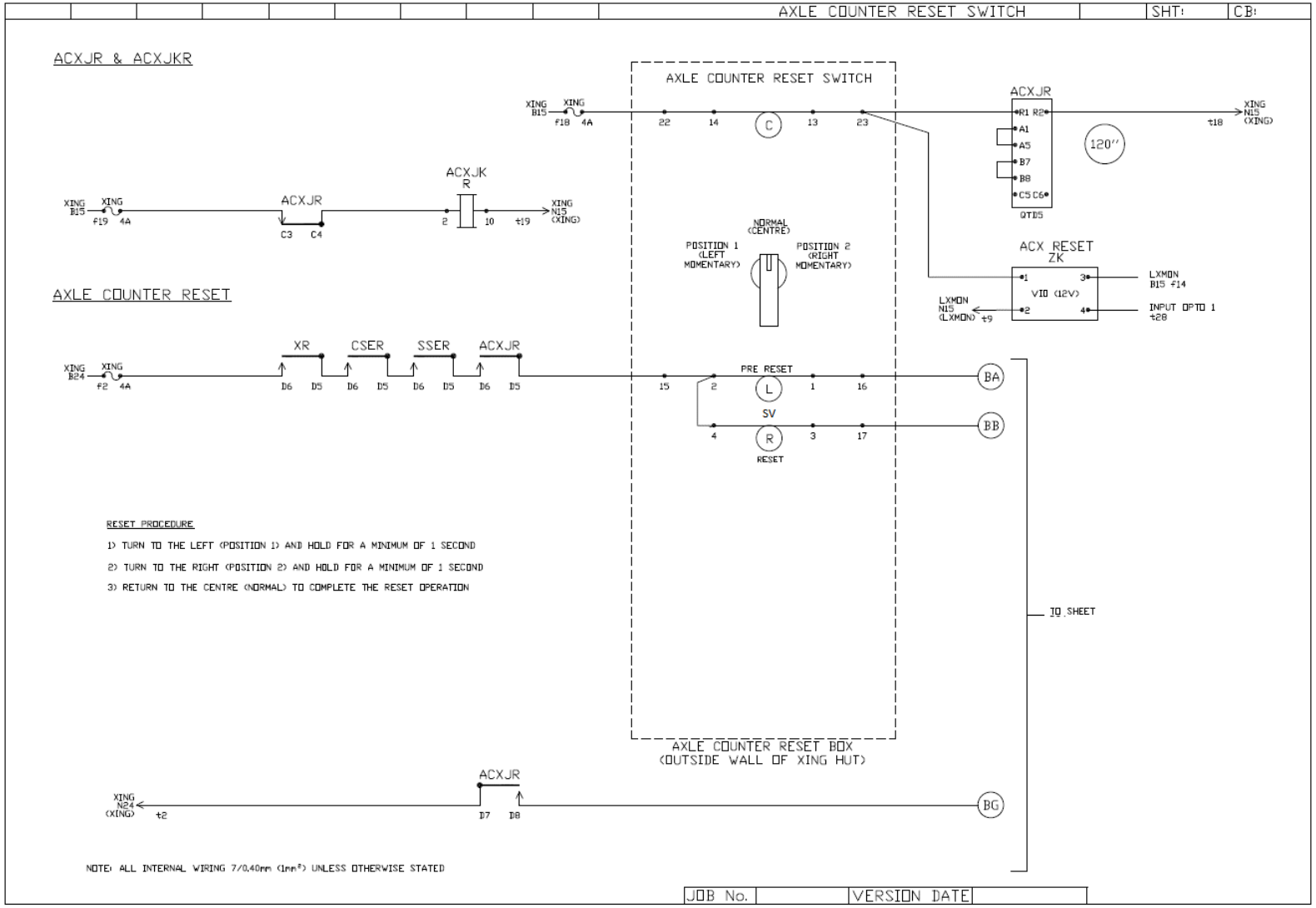

6.7. Axle Counter Reset Switch arrangement – Sheet 2

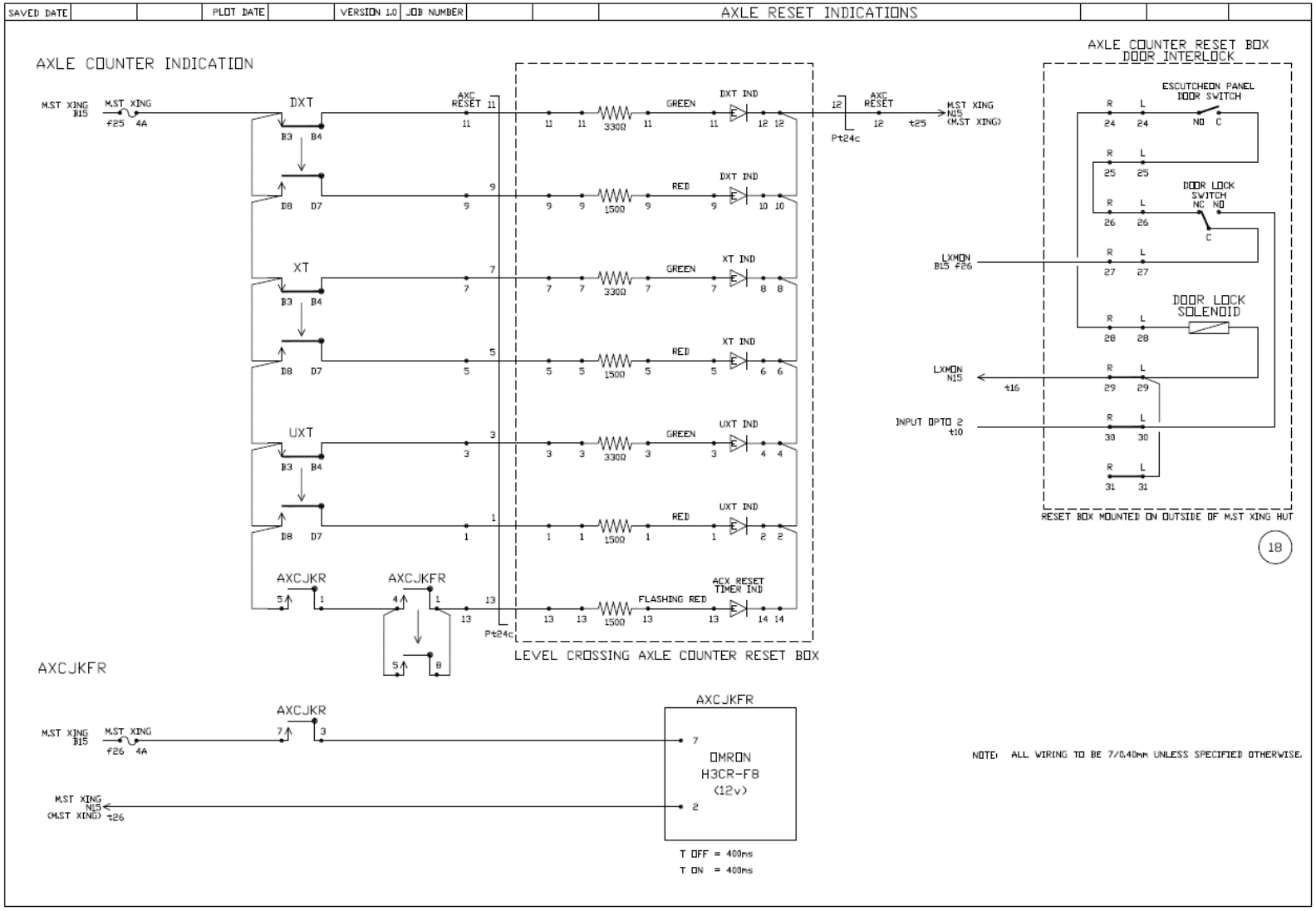

6.8. Axle Counter Pre-Reset / Reset wiring on I/O EXB

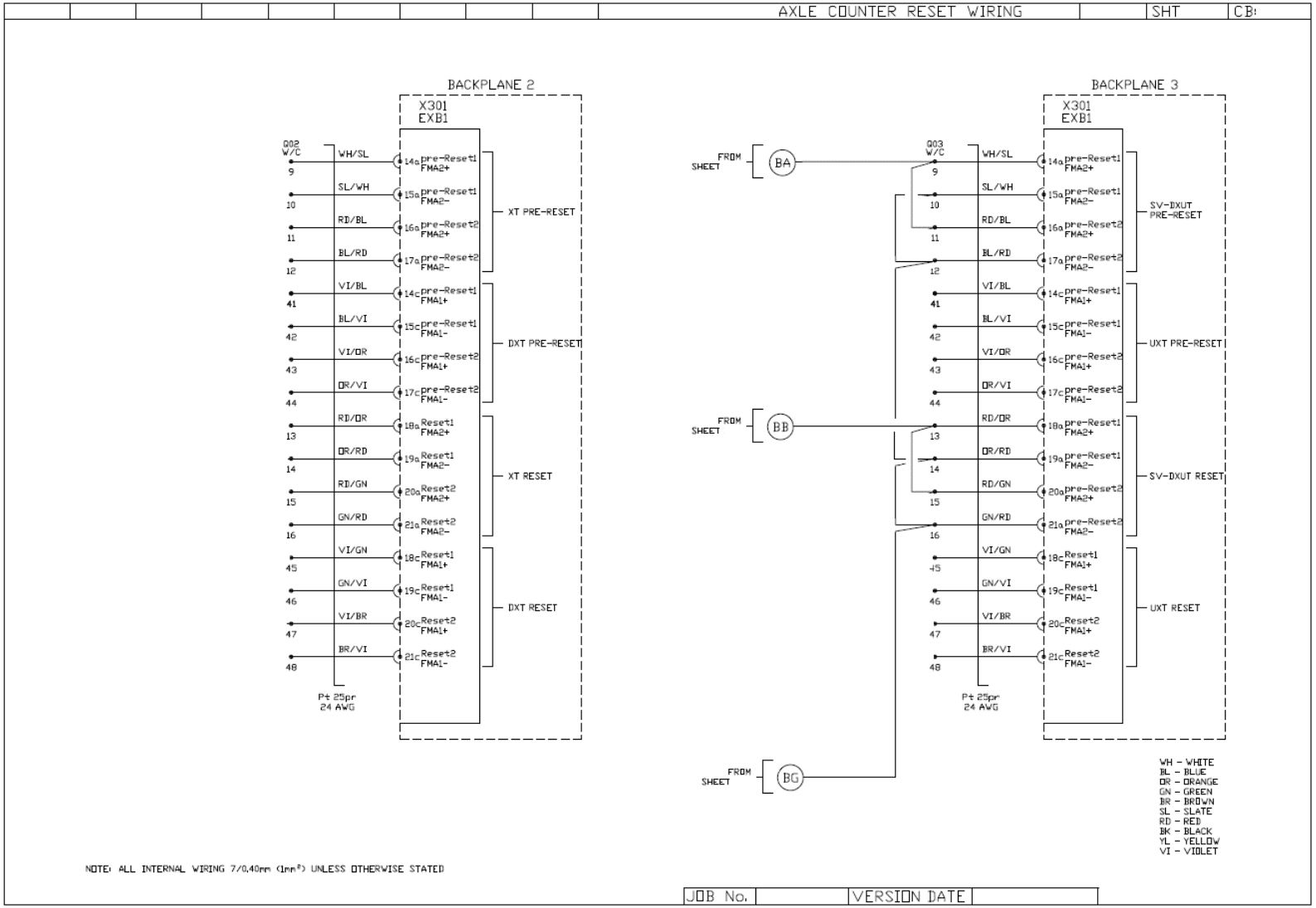

6.9. DIP Switch settings sheet 1 – General Layout

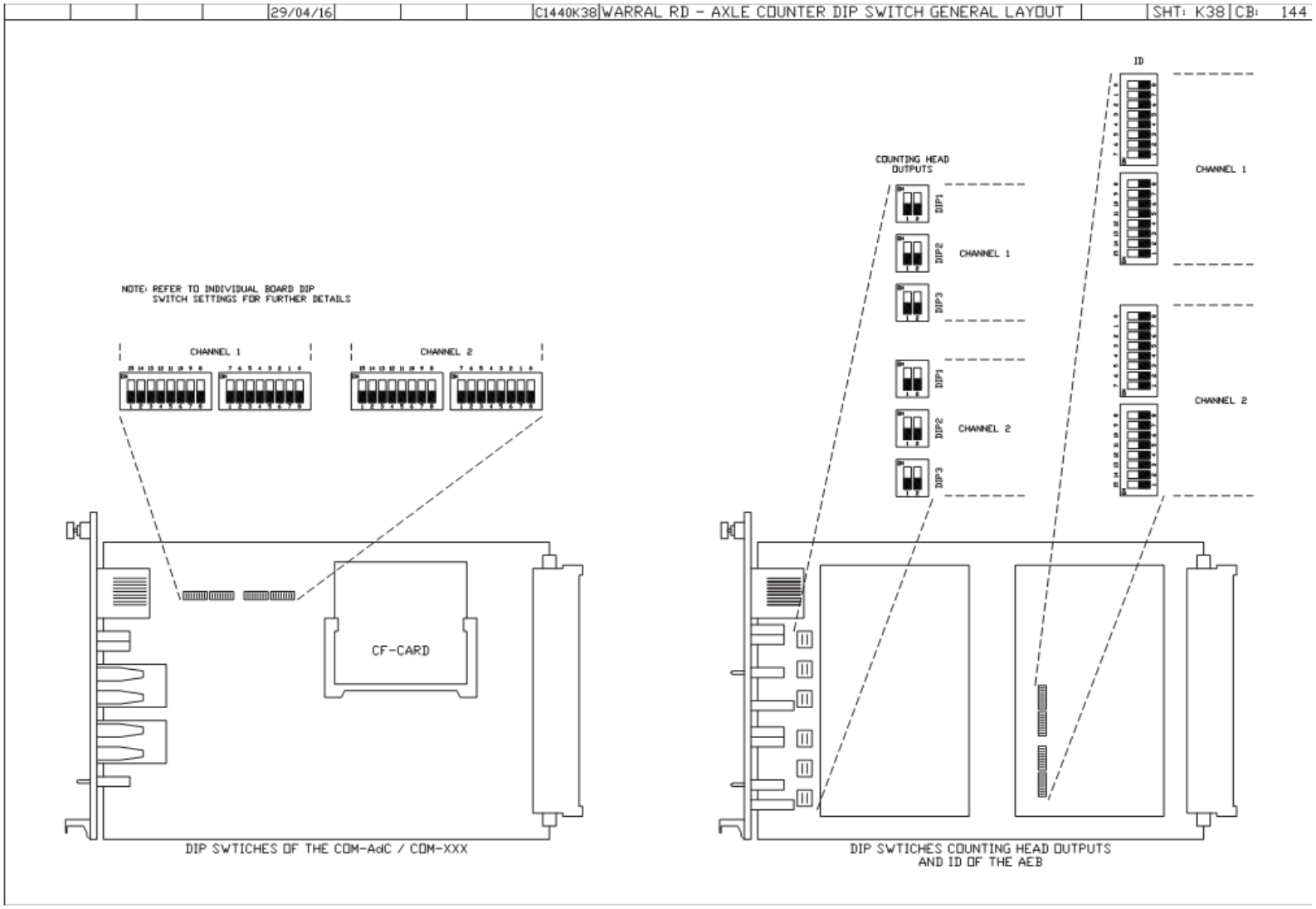

© State of NSW through Transport for NSW 2022

6.10. DIP Switch settings sheet 2 – Actuals based upon Design

6.11. DIP Switch settings sheet 3 – Actuals based upon Design

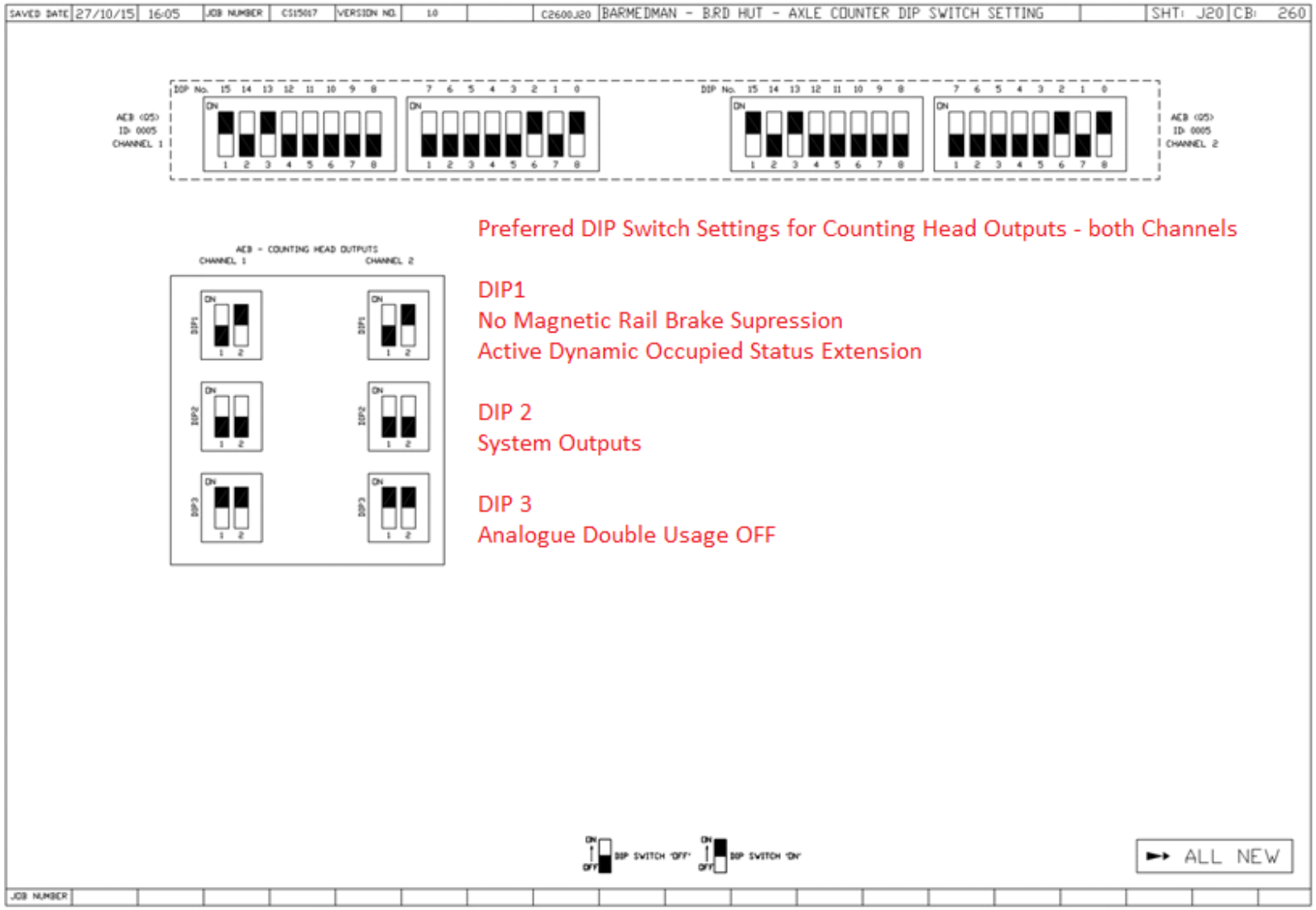
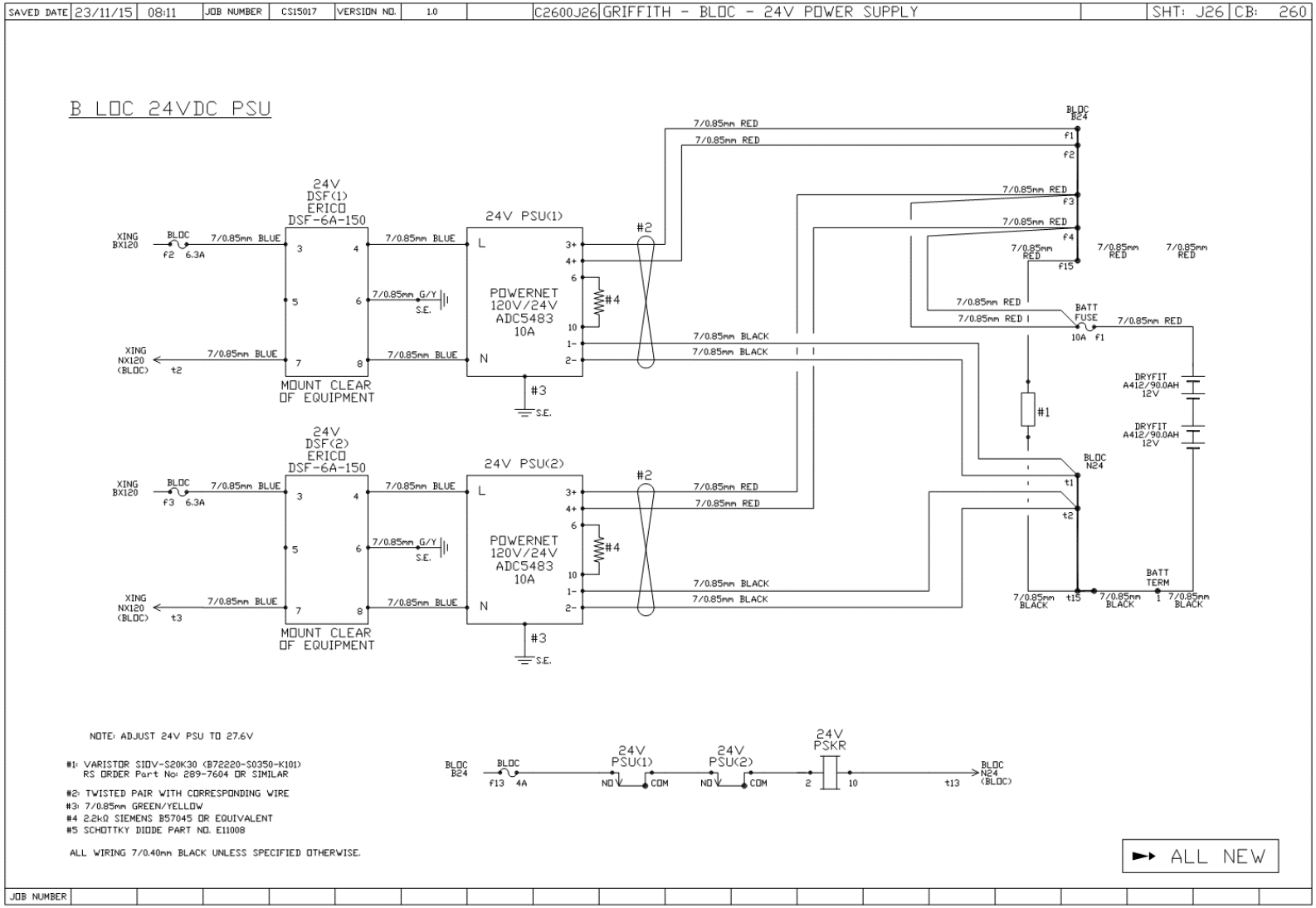
6.12. Redundant DC Power Supply Arrangements