TS 01286:1.0

CRN SD 018

Standard

Signalling Design Principles – Level Crossings

Issue date: 30 January 2022

Effective date: 30 January 2022

© State of NSW through Transport for NSW 2024

Disclaimer

This document has been prepared by Transport for NSW (TfNSW) specifically for its own use and is also available for use by NSW public transport agencies for transport assets.

Any third parties considering use of this document should obtain their own independent professional advice about the appropriateness of using this document and the accuracy of its contents. TfNSW disclaims all responsibility and liability arising whether directly or indirectly out of or in connection with the contents or use of this document.

TfNSW makes no warranty or representation in relation to the accuracy, currency or adequacy of this document or that the document is fit for purpose.

The inclusion of any third party material in this document, does not represent an endorsement by TfNSW of any third party product or service.

For queries regarding this document, please email Transport for NSW Asset Management Branch at standards@transport.nsw.gov.au or visit www.transport.nsw.gov.au

© State of NSW through Transport for NSW 2024

Document information

Owner: Director Signals & Control Systems Engineering, AMB, SER

Mode Heavy rail

Discipline Signals and control systems

Document history

Revision	Effective date	Summary of changes
Version 2.0	30 January 2022	TfNSW template applied Responsible Role changed to UGLRL Principal Signal & Comm. & Network Control Engineer

© State of NSW through Transport for NSW 2024

OFFICIAL

Table of contents

1. Level Crossings: Definitions, Types and Classifications 7
1.1. Introduction 7
1.2. Protected Level Crossing (Public or Private Road) 7
1.3. Protected Pedestrian Level Crossing 8
1.4. Level Crossing Warning Signs 8
1.5. Level Crossing Passive Traffic Control Devices 8
1.6. Types of Level Crossing Signs 8
1.7. Warning Lights 8
1.8. Advance Warning Lights 8
1.9. Supplementary Warning Lights 9
1.10. Level Crossing Controls 9
1.11. Level Crossing Operation 9
1.12. Level Crossing Warning Time 9
1.13. Approach Section 9
1.14. Holding Section 10
1.15. Tail Flashing 10
1.16. Qualification of Approach Sections or Controls 10
1.17. Locks 10
2. Common Level Crossing Design Requirements 10
2.1. Legal and Other Requirements 10
2.2. Warning Time 10
2.3. Initial Design Documentation Requirements 13
2.4. Power Supply 13
2.5. Power Supplies for Pedestrian Crossings 14
2.6. Circuit Integrity 14
2.7. Approach Warning Signs (Rail) 15
2.8. Crossing Monitoring 15
2.9. Emergency Switches 16
2.10. Local Test Switch and Manual Operation Switch 16
2.11. Audible Warning – Road Level Crossings 17
2.12. Level Crossing Failure Modes 17
2.13. Level Crossing, Crossing Track Circuit (X track) 18
2.14. Strobe Lights 18
3. Level Crossing Controlled by Flashing Lights Only 19
3.1. Introduction 19
3.2. Local & Environmental Requirements 19
3.3. Sequence of Operation 20
3.4. Warning Time 20
3.5. Crossing Controls 20
4. Level Crossing Controlled by Flashing Lights and Half-Boom Barriers 21

© State of NSW through Transport for NSW 2024

OFFICIAL

4.1. Introduction ... 21
4.2. Local & Environmental Requirements ... 21
4.3. Sequence of Operation ... 22
4.4. Holding Section Time ... 22
4.5. Crossing Controls ... 23
4.6. Pre-Emption Requirements for Road Traffic Control ... 23

5. Private Level Crossings fitted with Supplementary Warning Lights ... 24
5.1. Introduction ... 24
5.2. Provision of the Arrangement ... 24
5.3. Specific Requirements ... 24
5.4. Sequence of Operation ... 24
5.5. Warning Time ... 25
5.6. Crossing Controls – Single Track ... 25
5.7. Crossing Controls – Double Track ... 25
5.8. Circuit Integrity ... 25

6. Assessment of Pedestrian Level Crossings ... 28
6.1. Introduction ... 28
6.2. User Sighting Distance ... 28
6.3. Train Speed ... 28
6.4. Pedestrian Usage Rates ... 29
6.5. Special User Needs ... 30
6.6. Crossing Environment ... 30
6.7. User and Community need ... 30
6.8. Pedestrian Grade Separation ... 31

7. Pedestrian Level Crossing Controlled by Lights Only ... 33
7.1. Introduction ... 33
7.2. Provision of the Particular Arrangement ... 33
7.3. Local & Environmental Requirements ... 33
7.4. Sequence of Operation ... 33
7.5. Warning Time ... 33
7.6. Crossing Controls ... 34

8. Pedestrian Level Crossing Controlled by Lights and Barriers or Swing Gates ... 34
8.1. Introduction ... 34
8.2. Provision of the Particular Arrangement ... 34
8.3. Local & Environmental Requirements ... 34
8.4. Sequence of Operation ... 35
8.5. Warning and Operating Times ... 35
8.6. Crossing Controls ... 35

9. Shunter Operated Level Crossings ... 36
9.1. Introduction ... 36
9.2. Level Crossings without Track Circuits ... 36
9.3. Level Crossings with a Local Track Circuit ... 36

10. Level Crossings Near Interlockings & Sidings ... 38

© State of NSW through Transport for NSW 2024

OFFICIAL

10.1. Introduction 38
10.2. Requirement 38
10.3. Crossing Warning Cancelled after Train Comes to a Stand 38
10.4. Level Crossings Protected by Signals or MLI's and placement in proximity to roadways 39
10.5. Power Arrangements and Circuit Configuration 40
10.6. Special Arrangements 40

11. Level Crossing Operations in Train Order 41
11.1. Introduction 41
11.2. Application 42
11.3. Normally Clear Indicators 42
11.4. Normally at Stop Indicators 43

12. Level Crossing Interfaces to Road Traffic Lights 44
12.1. Introduction 44
12.2. Rail Signal and Road Signal Co-ordination 44
12.3. Interface Controls 46
12.4. Manual Operation and Test Switch Operation 47
12.5. Requirements for Boom Gates 48
12.6. Other Co-ordination Controls 48

13. Operation of Advanced Warning Lights for Level Crossings 48
13.1. Introduction 48
13.2. Sequence of Operation 49
13.3. Timing Requirements 49
13.4. Specific Requirements 49

14. Preferred equipment and telemetry arrangements for use on the CRN 50
14.1. Introduction 50

© State of NSW through Transport for NSW 2024

OFFICIAL

1. Level Crossings: Definitions, Types and Classifications

1.1. Introduction

All road/rail intersections (grade or level crossings) are provided with either passive or active protection. Passive protection is the application of passive traffic control devices (signage) which provides an unchanging warning to the road user whether or not a train is approaching the crossing.

Active protection is the application of warning devices to warn road users of the approach of a train when the train is a minimum time from entering the road-rail intersection. In some cases, it also blocks access to the crossing.

This section addresses the terms and definitions relating to those locations where active level crossing warning or protection devices have been provided for the safety of road users, pedestrians, and rail traffic.

The terms and definitions used throughout this standard are generally aligned with the wording used in the current Australian Standards and other CRN Documentation.

The arrangements proposed for each level crossing shall be approved by the Road Authority, Local Government, CRN, other Rail Authorities involved and any other Local Traffic Management Authority before a detailed design can be commenced. The Project Manager for the work shall be responsible for producing a project scope for signature by the necessary parties to ensure that they are in agreement with the proposed level crossing arrangement.

1.2. Protected Level Crossing (Public or Private Road)

A Protected Level Crossing is defined to be a road-rail intersection at which a risk assessment has determined that the hazard is such that provision of active warning and/or protection devices is required in the interests of the safety of the road traffic, pedestrians and rail traffic.

Active warning devices are provided for the protection of crossing users and there are no passive traffic control devices such as “GIVE WAY” or “STOP” signs

Types of Active Level Crossing Protection

These are defined in this standard as

- Level Crossing controlled by Flashing Lights.
- Level Crossing controlled by Flashing Lights and Half-Boom Gates.
- Level Crossing controlled by Flashing Lights and Four Quadrant Half-Boom Gates.

In this Standard the term Half-Boom Gate shall be synonymous with the terms Boom Barrier or Boom Gate. Four quadrant gates shall refer to application of half boom barriers arranged to control entry to and exit from the road-rail intersection.

© State of NSW through Transport for NSW 2024

OFFICIAL

AS 1742.7 defines the signage, marking and road layout applicable to each type of crossing.

1.3. Protected Pedestrian Level Crossing

A Protected Pedestrian Crossing is defined to be a pedestrian-rail intersection at which a risk assessment has determined that the hazard is such that provision of active warning and/or protection devices is required in the interests of the safety of pedestrians.

Types of Pedestrian Level Crossing Protection

These are defined as:

- Pedestrian level crossing controlled by lights.
- Pedestrian level crossing controlled by lights and boom barriers or swing gates.

1.4. Level Crossing Warning Signs

A level crossing warning sign is a warning sign provided to advise road users of the location of a road-rail intersection as defined in AS 1742.

1.5. Level Crossing Passive Traffic Control Devices

A regulatory sign, as defined in AS 1742, provided to require compliance to a Road traffic law which defines road user actions required when crossing a road-rail intersection.

1.6. Types of Level Crossing Signs

All level crossing signs, both at and approaching the level crossing, shall be in accordance with Australian Standard 1742.7 except that in specific situations, supplementary signage may be added to define a function or requirement.

1.7. Warning Lights

The assembly for a protected public level crossing shall be the RX-5 flashing light assembly defined in AS 1742.7.

Where the usage and type of road traffic justifies private level crossings may also be fitted with the RX-5 assembly,

In this standard the term RX-5 shall be synonymous with the term Type F Highway signal.

All new/upgraded installations shall use the R6-25 sign as part of the RX-5 assembly, except where wind loading (in the case of gantries, for example) precludes the use of the R6-25 sign.

1.8. Advance Warning Lights

Two side by side yellow flashing lights mounted on the same post as the W74B (or C) road sign, generally within a sign reading “Prepare to Stop” as defined in AS 1742.7. Used where the road

© State of NSW through Transport for NSW 2024

OFFICIAL

layout, approach speed, sun glare or obstructions limit the motorist's view of the Type F signals at the level crossing or there are other risk factors identified. Advance warning lights can be provided on all types of road level crossings.

1.9. Supplementary Warning Lights

Steady red lights fitted as a supplement to the passive traffic control signs "STOP" or "GIVE WAY", generally at private level crossings, where limited sighting of approaching trains significantly increases the risk to road users and trains.

Supplementary warning lights may also have application to minor secondary unsealed public roads as agreed between the rail and local road authorities.

1.10. Level Crossing Controls

Crossing Controls are defined to be the electrical (or electronic) controls necessary to initiate, maintain and end the operation of the warning and protection devices at a level crossing.

The Crossing Controls may be initiated automatically or manually or by a combination of both.

The Crossing Controls may have to be interlocked with railway signalling equipment controlling the passage of trains over the level crossing and depending on the complexity of the arrangements a number of "special controls" may be required.

At some locations it may be necessary to integrate the crossing controls with other systems, for example those controlling highway traffic lights.

1.11. Level Crossing Operation

Operation is defined to be the sequence and mode in which the Crossing Controls operate including the manner in which the level crossing warning and protection devices operate.

The mode of operation for all types of level crossing arrangements shall generally be in accordance with the AREMA C&S Manual and AS 1742.7

1.12. Level Crossing Warning Time

The level crossing warning time is defined as the minimum time of operation of the warning equipment for the fastest train from the initiation of the warning sequence until the front of the train reaches the road-rail intersection.

1.13. Approach Section

This is the section of track which when occupied by an approaching train will cause the level crossing warning equipment to operate.

© State of NSW through Transport for NSW 2024

OFFICIAL

1.14. Holding Section

There may be two trains approaching a level crossing. It is required to have a minimum time when the boom gates have lifted before they operate for the second train. A Holding track is used to extend the approach activation for the second train to include this additional time.

1.15. Tail Flashing

This is when the level crossing continues to operate after the train has passed and no other train is approaching.

1.16. Qualification of Approach Sections or Controls

This is a functional arrangement where the effect of the alarm state of a control function is circumvented by another control function being in the true state.

1.17. Locks

The locks on the level crossing equipment shall be as defined for that jurisdiction.

2. Common Level Crossing Design Requirements

2.1. Legal and Other Requirements

The design of the level crossing shall conform to all statutory requirements and to the requirements of the organisations holding authority for the particular part of the work scope.

In addition, the design shall be in accordance with the requirements of AS 1742.7.

2.2. Warning Time

2.2.1. Absolute Minimum Warning Time

The absolute minimum warning times applicable to road level crossings shall be the greater of times mandated by law, by road authorities, in accordance with the AREMA C&S Manual Part 3.3.10 or this standard.

Design minimum warning times for road and pedestrian crossings shall be:-

- 25 seconds for Type F light installations.
- 30 seconds for Type F light and boom barrier installations.
- 20 seconds for pedestrian crossings with lights
- 25 seconds for pedestrian crossings with lights and booms or swing gates

© State of NSW through Transport for NSW 2024

OFFICIAL

Note: Where the pedestrian crossing is associated with a road crossing, the times for the road crossing will apply. Additionally, where the design includes disabled access, these timings may need to be adjusted to suit the specific design.

2.2.2. Preferred arrangement for active protection on Public Roads.

The preferred arrangement for all active protected level crossings is type F lights with half road booms (see Section 4).

Where pedestrian access is required this access must be considered. The preferred arrangement is full active pedestrian protection with barriers or swing gates (see section 7). However other pedestrian arrangements should be considered if community need and risk assessment identify less pedestrian protection is appropriate for a site.

Alternate pedestrian arrangements can be

- Light only active warning.
- Passive pedestrian.

Alternatively, pedestrian access can be deleted where it is identified that no pedestrian access exists at a site.

2.2.3. Additional Time Allowances for Angled or Wide Crossings

Where the intersection between the road and the railway deviates from 90° the distance travelled by vehicles to clear the crossing is lengthened. In the case where the distance to clear the crossing is more than 10 m then the minimum warning time shall be increased.

The distance to clear the crossing is measured along the road alignment from a line drawn parallel to the closest track and 3.6 m from the nearest rail whichever is furthest from the departure side of the crossing, to a point on the departure side on a line drawn parallel to the closest track and 2.3 m from the nearest rail which point is furthest from the arrival side (see Figure 1).

For every 3 m above 10 m width the minimum warning time shall be increased by 1 second.

© State of NSW through Transport for NSW 2024

OFFICIAL

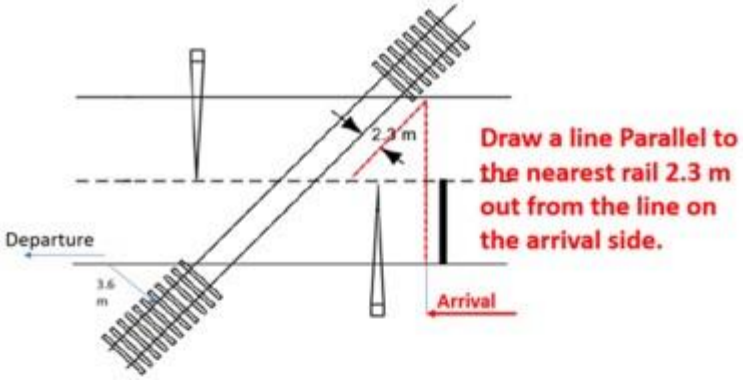

Step 1

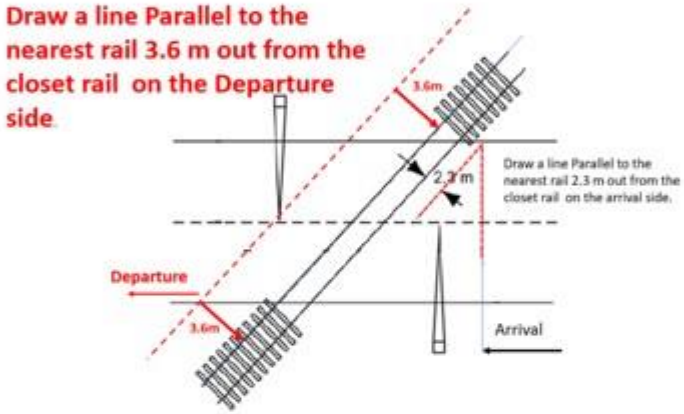

Step 2

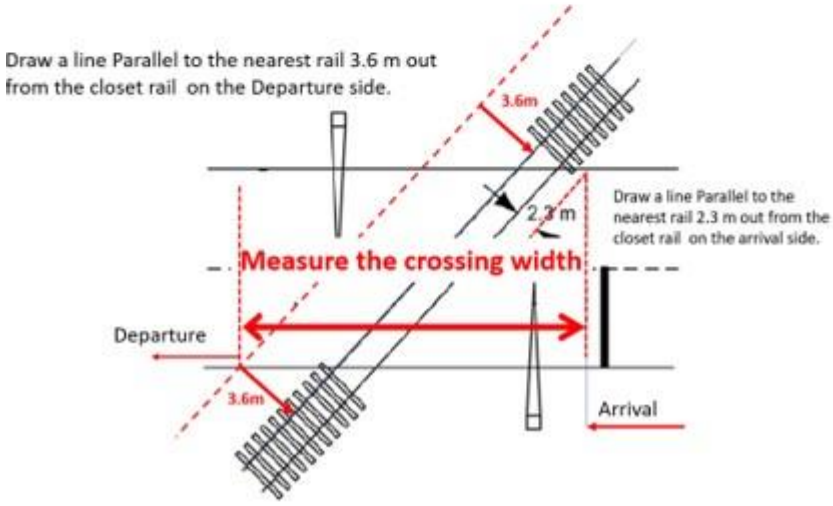

Step 3

Figure 1 – Width of angled crossing

2.2.4. Other Considerations

Care shall be exercised in relation to ascertaining the minimum warning time of the fastest trains for various level crossing applications having regard to the avoidance of excessive warning times as a result of slow or stopping train patterns.

Use of a constant warning time device is preferred where the technology and application are suitable.

The minimum warning times specified for Type F light installations must be met for Supplementary Warning Lights; significantly longer warning times are acceptable if use can be made of existing train detection systems in the area.

2.3. Initial Design Documentation Requirements

The initial design for signoff by the applicable authorities must cover the following:

- A layout diagram of the crossing including proposed road markings
- A flashing lights alignment diagram showing the aiming distance of each of the flashing lights. This diagram shall also indicate which lighting bus each light is fed from - A written description of the operation of the crossing.
- The changes to the arrangement and controls of the signalling required to a level where operational signoff could be obtained (signal track plan or equivalent).
- Any other information requested by the signing authorities
- In accordance with Rail Safety Legislation act, a level crossing road interface agreement shall be drafted.

2.4. Power Supply

The power supply for the level crossing shall consist of a main AC power source unless the infrastructure manager indicates otherwise.

A standby battery and battery charger shall be permanently connected to this supply.

The standby battery shall be of sufficient capacity to ensure the proper operation of the crossing equipment, including any other loads at the location fed from the standby battery for at least 24 hours under normal operating conditions.

The objective of the standby battery is to maintain operation of the system between the time when the system is inspected, and any faults can be rectified. The use of remote monitoring aids in early identification of this issue. The following alternatives:

- Daily Testing of the level crossing, either on site or remotely and battery backup for 36 hours
- Weekly testing of the level crossing and battery backup for seven days

© State of NSW through Transport for NSW 2024

OFFICIAL

- Alternative multi-day testing battery back-up of 12 hours with remote monitoring

All functions of a level crossing shall be battery back-up.

The design shall ensure that power interruptions occurring during any part of the warning cycle do not cause a premature boom barrier to drop or rise.

2.5. Power Supplies for Pedestrian Crossings

Standalone pedestrian level crossings shall normally be provided with a single ac power supply and a standby battery power arrangement.

If a standby system is not to be used, then a total failure of the power supply shall also inhibit normal train operations through the crossing.

2.6. Circuit Integrity

All of the level crossing controls shall be designed on the failsafe principle where possible.

Duplicated flasher units (or single units with internally duplicated flashers) and wiring shall be provided to operate the Type F flashing lights. The feed or return wiring to each Type F light assembly shall be duplicated as the circuitry permits so that the failure of one flasher or the open circuit failure of one wire, fuse or connection point shall not result in the total loss of all the highway signals on one side of the crossing.

The lights facing to one side of the crossing shall be fed so that half the lights are powered from one flashing bus and the other half from a separate flashing bus. Common fusing of both buses is not permitted. In the case where duplicated flasher units are mounted in one single unit the manufacturers recommended method of feeding the lights should be used.

All level crossing approach control designs shall consider the possibility of momentary loss of train shunt or the possibility of out of sequence reporting of track occupancy when short track sections are used. To counter this, the design will need to delay the operation of track functions taking care not to increase tail flashing. In general, a delay of not less than 3 seconds shall be applied to all approach track sections by external time delay units or by the setup of properties of the detection device.

The design must ensure that:

- the crossing warning operation must not be interrupted
- holding section must not allow premature termination of the warning cycle
- booms must not rise and fall again
- pedestrian gates must not open and close again
- tail flashing prevention is reliable

© State of NSW through Transport for NSW 2024

OFFICIAL

2.7. Approach Warning Signs (Rail)

W7-4B warning signs to AS 1743 shall be erected immediately to the left of the running line and adjacent to the start of the approach track section for the crossing. This sign is shown in Figure 2.

Alternatively, warning signs in accordance with Australian National Code of Practice may be installed if consistent with local requirements.

For Predictor controlled level crossings, the approach warning sign shall have a blue surround.

Conventional W7-4B signage maybe used on Predictor train detection where the train detection is designed and configured so as speed increases and decreases on approach lengths are accommodated within the design.

Figure 2 - Sign used for Non-predictor Level Crossings

2.8. Crossing Monitoring

Level crossing functions shall be monitored locally with a level crossing monitor/event logger.

Crossing functions to be monitored include:

- Road Boom Gates normal and reverse
- Pedestrian Gates normal and reverse (preferably individually)
- Crossing control
- Gate Delay
- Light controls
- Emergency gate operations and lock proving (where provided) - Local track circuits
- All Test, Manual Control and Emergency switches
- Lamp integrity
- Other functions available within the level crossing location may be monitored, if required

Remote monitoring and testing of the level crossing functions should also be provided whenever suitable communications facilities are available.

© State of NSW through Transport for NSW 2024

OFFICIAL

2.9. Emergency Switches

Emergency switches shall be located and/or secured so that only maintainers have access to them.

All level crossing installations in locations where an interlock can be provided which limits the ability of trains to operate through the crossing shall be fitted with a single emergency switch to turn off the crossing. This will cause all booms to raise, pedestrian gates to open, lights to extinguish and to silence the warning bell. When the emergency switch is operated, signals applying over the crossing must be designed to be held at stop.

Independent emergency switches shall be provided enabling a manual control for extinguishing each of the flashing light highway signals.

Each road boom will be provided with its own emergency boom switch. This will permit a damaged boom to be tied up and the mechanism disconnected so that it is not damaged while the rest of the crossing operates. While the boom is tied up it will not be possible to clear signals over the crossing.

Local emergency switches are not required for Level Crossings on private roads.

2.10. Local Test Switch and Manual Operation Switch

A test switch shall be provided for testing purposes to enable the highway signals, the half-boom barriers, the warning bells and warning lights (each where fitted) to operate directly from the standby power supply, with the main supply switched off.

- Within the test switch box, the following indications shall be provided.
- A power supply indication shall be provided to enable the charge status of the standby battery to be determined when the test switch is activated.
- This shall be two sperate indication LED indicators in parallel operating from a voltage-sensing device.
- The lamps shall be illuminated when the voltage of the standby battery is equal to or above a predetermined level.
- The lamp shall remain extinguished when the voltage of the standby battery is less than a predetermined level.
- Both these lamps shall be inhibited from operating when the test switch box is closed.
- The lamps shall be Ultra Bright LED type.

A manual operation switch shall be provided in a SL locked box. This switch is used to manually operate the level crossing.

© State of NSW through Transport for NSW 2024

OFFICIAL

2.11. Audible Warning – Road Level Crossings

On single line level crossings, a warning bell, or other approved audible warning device, shall be provided at the level crossing and shall surmount the Country side Type F highway signal post. The bell may be mounted on the city side signal post if this is a better arrangement due to local conditions or local crossing layout particularly where this warning is beneficial to a nearby passive pedestrian maze. The audible warning may be suppressed if required for noise abatement purposes when the front of the train passes over the level crossing.

On multiple line level crossings, two warning bells, or other approved audible warning devices, shall be provided at the level crossing such that one shall surmount the City side Type F highway signal post, and one shall surmount the Countryside Type F highway signal post.

The audible warning on one side of the level crossing may be silenced when both the half-boom barriers are fully lowered. Alternate arrangements for silencing of audible warnings may be applied if site conditions warrant and approval of the infrastructure manager is provided.

In those locations where pedestrian barriers and lights are fitted, both the level crossing audible warning bells can be suppressed if required when the booms are fully lowered provided that the pedestrian crossing is fitted with controlled volume warning devices.

The standard highway crossing bells may be silenced at night between 2200 and 0600 Eastern Standard Time providing the crossing is provided with booms and noise abatement conditions require it. Alternatively, where pedestrian traffic is likely, but a separate crossing is not provided, the highway crossing bells may be switched off and lower sound output warning devices used.

Pedestrian audible warning devices are not to be silenced.

Level crossings without booms are not to have audible warnings silenced except in special circumstances (refer Section 3.2).

2.12. Level Crossing Failure Modes

Level crossing warnings are intrinsically non-failsafe, since the absence of a warning implies that it is safe to cross. Level crossings shall be designed so as to minimise the impact of failures on the operation of the crossing. The following are acceptable minimum failure modes and goals.

- No single failure of the level crossing equipment shall result in the level crossing failing to give a warning indication when required. Modes that are to be protected against are:
- Protection against inhibition of warning for next train in opposite direction on lines with traffic in both directions.
- Protection as far as possible against extended continuous operation without train present.
- Protection against widespread loss of lights caused by a single high resistance relay contact or terminal, broken wire or blown fuse.

© State of NSW through Transport for NSW 2024

OFFICIAL

- A failure of the external power supply shall not affect the integrity of the level crossing protection as permitted by the battery capacity.
- Lamp and flasher circuits shall be configured so that in the event of a single failure, a reduced, but effective warning is provided for vehicles approaching from both directions.
- Additional lights, when provided, shall be wired to enhance the operation in failure conditions.
- Boom mechanisms shall descend on failure, except for trailing booms on four quadrant boom installations, where the booms shall rise.
- Pedestrian Emergency gates shall become accessible on failure.
- Pedestrian swing gates shall close on failure.
- Road Warning lights shall continue to be displayed until booms are fully raised.

2.13. Level Crossing, Crossing Track Circuit (X track)

All level crossings shall be designed so that if a train is within or adjacent to the rail – road intersections the level crossing will operate. A separate track section shall be provided for each track across the crossing. The crossing track circuit may be provided as part of the approach track section if the traffic is unidirectional and there is no qualification on the approach track section.

Crossing track circuits wherever possible will have the insulated joints located preferably no more than 10 m from the edge of the roadway. (The point at which the level crossing warning controls cease to operate) notwithstanding the minimum length of track circuit. This is to minimise delays to road users. The crossing track may be increased in length to cover a pedestrian crossing to the side of a road crossing.

Crossing track circuits are required where shunter's push buttons are provided as the only means of commencing the operation of the crossing and the level crossing is required to automatically cancel (X track cancel) for shunting functions. However, where this crossing track circuit cancel function is not operationally required the crossing track circuit may be deleted in this circumstance.

2.14. Strobe Lights

Strobe lights may be placed on the level crossing hut at some locations in accordance with local requirements.

© State of NSW through Transport for NSW 2024

OFFICIAL

3. Level Crossing Controlled by Flashing Lights Only

3.1. Introduction

This section addresses the design requirements for a level crossing controlled by flashing lights only including its mode of operation and the determination of the appropriate crossing controls and indications. This covers operation by train detection and excludes shunter operated level crossings.

3.1.1. Provision of the Arrangement

This is not the preferred arrangement where active protection is considered on public roads.

The use of flashing lights only protection shall only be provided on public roads where a specific risk assessment has been completed.

The risk assessment must consider and include risks associated with removing half-boom barriers.

A level crossing controlled by flashing lights only can only be considered where the public road intersects a single line railway.

3.1.2. Level Crossings on Private Roads

Other arrangements may apply to level crossings on private roads.

If active warning devices are required, the preferred arrangement is found in section 5 of this principle

If a risk assessment (refer Section 1.2) has identified that active “F” type level crossing protection is required at a private road level crossing “F” type flashing lights may be installed and only on condition that a permanent stop line shall be provided.

The “F” type lights shall comply with all standards and conditions referenced in this Principle and the Australian Standards

3.2. Local & Environmental Requirements

Local and environmental requirements shall determine the need to:

- Provide additional Type F highway signals.
- Position the warning bell on the city side Type F highway signal post.
- Provide an additional warning bell.
- Mute warning bells. Note: A controlled volume warning device may be used as a substitute for the bell at night where required. A controlled volume warning device may also be used

© State of NSW through Transport for NSW 2024

OFFICIAL

outside this period as a noise abatement measure where approved by the CRN Signalling Manager.

- Mute or conditionally suppress warning bells at night, (Note: the preferred solution is the controlled volume warning device) may be approved if a risk assessment has determined that the hazard is such that suppression of the warning bells and/or protection devices shall not compromise pedestrian and road traffic safety, the CRN Signalling Manager may approve the suppression of the audible warning devices.
- Advance warning lights may also be provided on one or both road approaches to the level crossing where the motorist's view of the Type F signals is compromised by the road layout or by in response to other risk factors. ALCAM should be used to evaluate the risk factors of a level crossing.

3.3. Sequence of Operation

If no train is approaching the level crossing, then the Type F highway signals shall be extinguished, and the warning bell shall be silent.

If a train is approaching the level crossing, then the Type F highway signals shall commence and continue to flash alternately, and the warning bell shall commence and continue to sound.

At crossings fitted with advance warning lights, the requirements of AS 1742.7 dictate that these lights shall begin flashing from 5 to 17 seconds prior to the Type F highway signals.

When the rear of the train passes clear of the level crossing then the Type F highway signals, and advance warning lights, where fitted, shall become extinguished and the warning bell shall be silenced.

3.4. Warning Time

The warning time interval between the Type F highway signals commencing to flash and a train travelling at the maximum permissible speed applicable to a particular level crossing arriving at the level crossing shall be designed to provide a minimum of 25 seconds warning plus any allowance for angled or wide crossings.

At those locations where road trains and B-triples are authorised by the Road Authority to operate the warning time shall be increased to a minimum of 30 seconds.

3.5. Crossing Controls

The operation of the level crossing shall be initiated and maintained automatically by the occupation of a controlling section of track on the approach side to the level crossing.

The length of this controlling section of track shall be determined to ensure that the minimum warning time can be met.

© State of NSW through Transport for NSW 2024

OFFICIAL

Controls shall also be provided to prevent the continued operation of the level crossing when a departing train occupies the section of track circuit controlling the operation of the level crossing for trains approaching from the opposite direction.

These controls shall be proved to have operated correctly in signal circuits, or by other approved techniques.

At some installations shunter's push buttons may be provided to operate the level crossing when shunting movements are taking place over the crossing on normally non track circuited sidings.

4. Level Crossing Controlled by Flashing Lights and Half-Boom Barriers

4.1. Introduction

This Principle addresses the requirements for a level crossing controlled by flashing lights and half-boom barriers including its mode of operation and the determination of appropriate crossing controls and indications. This covers operation by train detection and excludes shunter operated level crossings.

4.1.1. Provision of the Arrangement

The installation of flashing lights and half-boom barriers **shall be considered the minimum specification** on new installations and the preferred arrangement on all public roads.

Booms may only be opted out of an installation where all the following has been considered: -

- The crossing exists on a single line area.
- The crossing is within a yard or other such restricted area where both rail and road usage is considered extremely low.
- Following a risk assessment specifically addressing risks around the removal of half boom barriers.

Other arrangements may apply to the protection on private roads.

4.2. Local & Environmental Requirements

Local and environmental requirements shall determine the need to:

- Provide additional Type F highway signals.
- Mute or conditionally suppress warning bells at night.
- Substitute controlled volume warning devices in lieu of the bells at night and, if approved by the CRN Signalling Manager, during the day.

© State of NSW through Transport for NSW 2024

OFFICIAL

4.3. Sequence of Operation

If no train is approaching the level crossing then the Type F highway signals shall be extinguished, the half-boom barriers shall be in the fully raised position and the warning bells shall be silent.

If a train is approaching the level crossing and reaches the “strike in” point then the Type F highway signals shall commence and continue to flash alternately and the warning bells shall commence and continue to sound.

After 11 seconds time interval the half-boom barriers shall commence to lower and after an additional 11 to 13 seconds, they shall reach the fully lowered position and one of the warning bells shall be silenced.

In the case of crossings with extended warnings times as a result of the operation of large articulated vehicles (B triples or Road trains) the delay before the booms commence lowering shall be increased by a further 5 seconds to 16 seconds.

In the case of an angled or wide crossing, the additional time calculated shall be added to the final phase of the sequence of operation – that is, the time when the half-arm barriers are lowered before the train arrives at the road / rail interface shall be extended by the calculated additional time.

After the minimum approach time has expired the front of the approaching train will reach the level crossing.

When the train has cleared the crossing, the booms shall commence to rise to the upright position and the bell will be silenced.

The half-boom barriers shall reach the fully raised position within 10 seconds and the Type F highway signals shall become extinguished.

If a second train is approaching the level crossing as the rear of the first train passes clear of the level crossing and there is insufficient time for the half-boom barriers to rise and remain in the fully raised position for a time interval, given in section 4.5 before commencing to lower for the second train then they shall remain lowered until the rear of the second train has also passed clear of the level crossing.

4.4. Holding Section Time

The holding section time is intended to ensure that a vehicle which commences to cross at the completion of a train passing through the crossing can cross without danger of being struck by or of damaging the warning equipment due to unexpected boom descent.

The holding section time shall not be less than 15 seconds for all crossings. The holding section may be designed to use convenient track circuit locations and extended to 25 seconds for convenience.

© State of NSW through Transport for NSW 2024

OFFICIAL

Where the holding section is used for traffic lights pre-emption or controlling advance warning signs, the length may be adjusted to suit the traffic lights requirements subject to the holding section not being less than 15 seconds.

4.5. Crossing Controls

The operation of the level crossing shall be initiated and maintained automatically by the occupation of a track section on the approach side of the level crossing to ensure the correct minimum warning time is obtained.

The operation of the level crossing shall also be maintained by the occupation of a holding section of track on the approach side of the controlling section of track.

If bi-directional movements take place, then controls shall also be provided to prevent the continued operation of the level crossing when a departing train occupies the section of track circuit controlling the operation of the level crossing for trains approaching in the other direction.

These controls shall be proved to have operated correctly in signal circuits, or by other approved techniques.

At some installations shunter's push buttons may be provided to operate the level crossing when shunting movements are taking place over the crossing on normally non track circuited sidings.

An additional track circuit may be provided on the siding track to hold the crossing down and provide an auto re-clear feature when the shunting movement has passed clear of the crossing.

4.6. Pre-Emption Requirements for Road Traffic Control

Where active level crossings interface directly with Road Traffic Control systems such as traffic lights, it is usually required that level crossing controls provide a pre-emption Train Demand indication to the road traffic controls. All pre-emption requirements should be considered prior to the activation of the level crossing.

A pre-emption phase allows the traffic light controller to provide an intersection clearance phase prior to the activation of the level crossing.

Timing extensions in relation to the pre-emption need to be determined based on the potential maximum clearance times of the traffic controller.

Level crossing designs must include pre-emption into the design where traffic controllers require a clearance phase.

Pre-emption should be achieved by extending level crossing approach train detection.

The pre-emption times once determined shall be included into level crossing control circuitry by either, the inclusion of vital timers into an extended approach track circuits, or the utilisation of extra track circuits within the level crossing approach.

© State of NSW through Transport for NSW 2024

OFFICIAL

5. Private Level Crossings fitted with Supplementary Warning Lights

5.1. Introduction

This section addresses the requirements for a level crossing fitted with warning lights which are supplementary to the passive control devices (signage) and includes the mode of operation and the determination of the appropriate crossing controls and indications. This covers operation by train detection and excludes shunter operated level crossings.

The warning lights are secondary to the primary RX1 or RX2 level crossing assembly which must be obeyed by the motorist irrespective of the state of the warning lights.

The warning lights shall be red LED units 90 to 110 mm diameter.

5.2. Provision of the Arrangement

This particular arrangement shall only be provided where a private road intersects no more than a double line railway and a normal Type F installation cannot be justified. Refer to Figure 3 and Figure 4.

An evaluation of the risk factors for the rail to road interface shall be undertaken to confirm requirements.

5.3. Specific Requirements

The passive protection (signage) at the crossing shall be in accordance with AS 1742.7 figure 1(a) RX1 or RX2 assembly for a level crossing with passive control devices. All new/upgraded installations shall use the R6-25 sign as part of the RX5 assembly.

Signage describing the function of the supplementary warning lights shall be provided at the crossing. Refer to Figure 3 and Figure 4.

No audible warning device is required.

A local emergency switch is not required.

A manual operation switch is not required.

5.4. Sequence of Operation

If no train is approaching the level crossing, then the warning lights shall be extinguished.

If a train is approaching the level crossing and reaches the “strike in” point, then the warning lights shall illuminate and remain steadily illuminated.

When the rear of the train passes clear of the level crossing then the warning lights may become extinguished, some tail flashing is acceptable.

© State of NSW through Transport for NSW 2024

OFFICIAL

5.5. Warning Time

The warning time interval between the warning lights becoming illuminated and a train travelling at the maximum permissible speed applicable to a particular level crossing arriving at the level crossing shall be designed to provide a minimum of 25 seconds warning.

Extended warning times, up to 75 seconds, are permissible and consideration should be given to using existing track circuits or other approved detection devices where these are available.

5.6. Crossing Controls – Single Track

The warning lights control equipment must by designed to take account of equipment failures.

The operation of the level crossing shall be initiated and maintained automatically by the occupation of a controlling section of track on the approach side to the level crossing.

The length of this controlling section of track shall be determined to ensure that the prescribed warning time can be met.

A fouling track section over the level crossing is not required for supplementary warning lights

Controls shall also be provided to prevent the continued operation of the level crossing when a departing train occupies the section of track circuit controlling the operation of the level crossing for trains approaching from the opposite direction.

5.7. Crossing Controls – Double Track

The operation of the level crossing shall also be maintained by the occupation of a holding section of track on the approach side of the controlling section of track.

The length of this holding section of track shall be determined to ensure that a minimum holding time of 15 seconds is provided for the second train.

If bi-directional movements take place, then controls shall also be provided to prevent the continued operation of the level crossing when a departing train occupies the section of track circuit controlling the operation of the level crossing for trains approaching in the other direction.

5.8. Circuit Integrity

Warning systems provided by CRN shall be designed so that a failure in wiring connections or fuses shall not result in a total loss of warning lights operation.

© State of NSW through Transport for NSW 2024

OFFICIAL

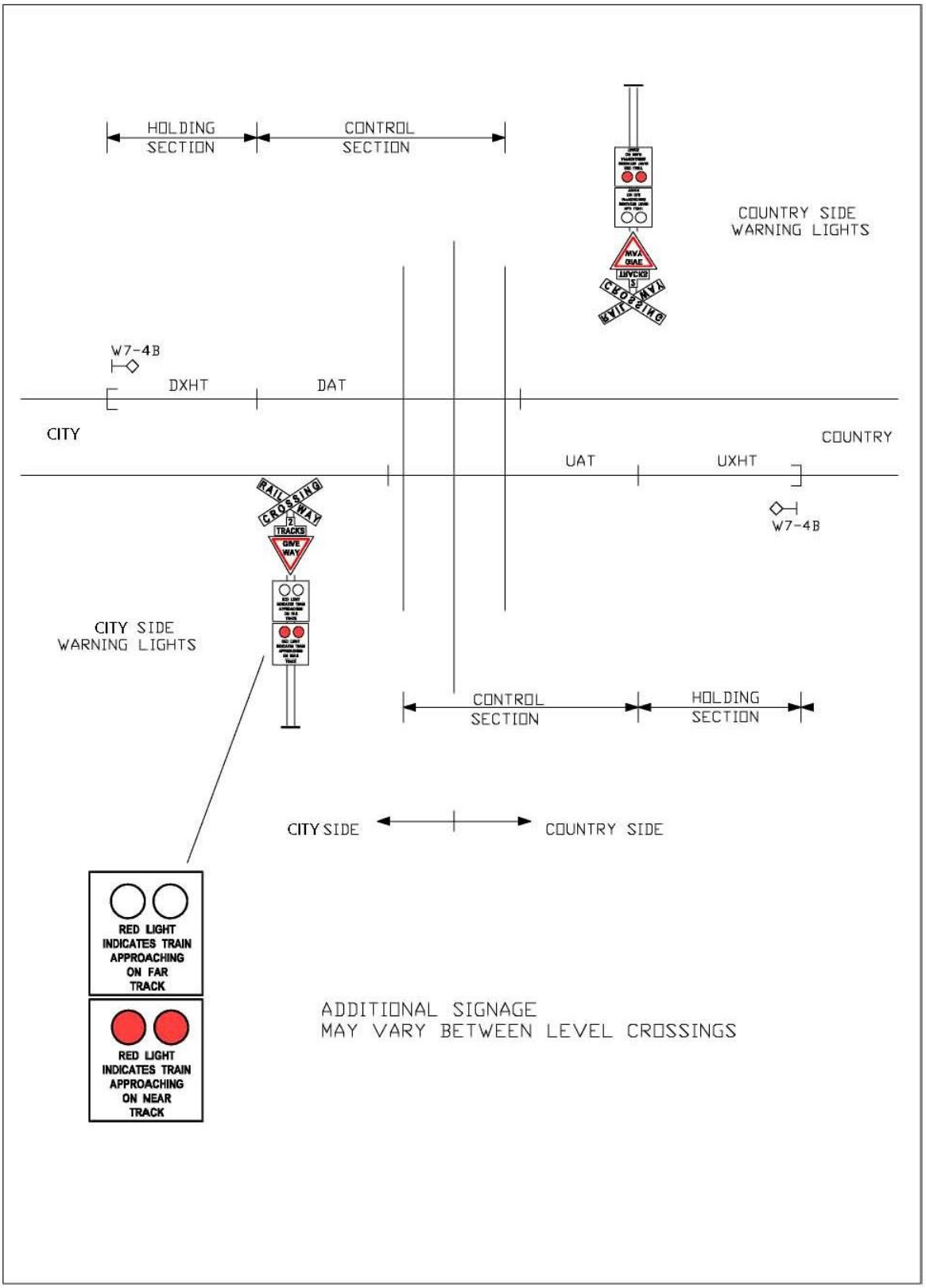

Figure 3 - Level Crossing with Supplementary Warning Lights

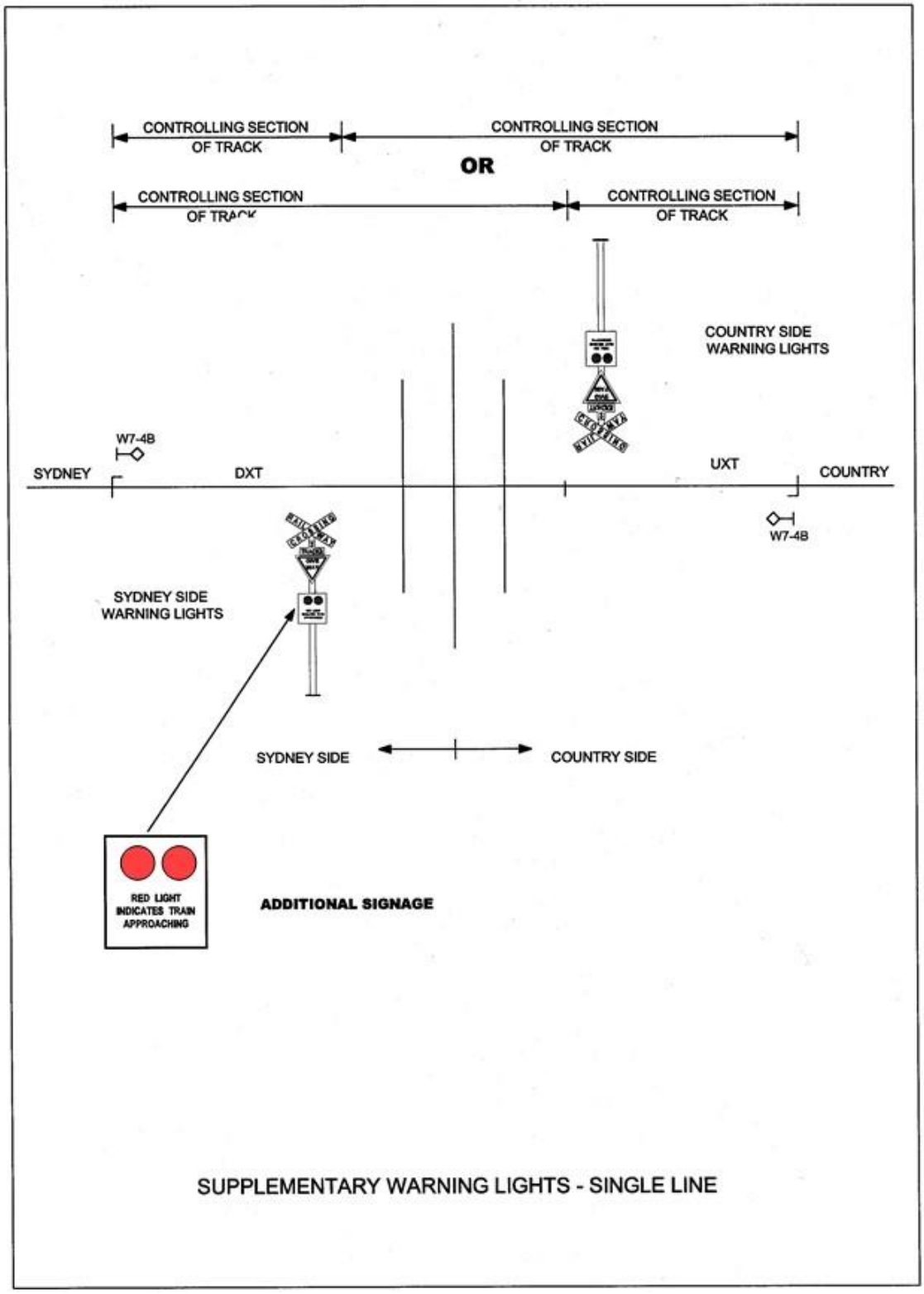

Figure 4 - Level Crossing with Supplementary Warning Lights

6. Assessment of Pedestrian Level Crossings

6.1. Introduction

This section addresses the requirements when risk assessing the need for pedestrian crossing access.

Risk assessments include the following in relation to pedestrian access:

- User Sighting Distance.
- Train Speed.
- Pedestrian Usage Rates.
- Special User Needs.
- User Crossing Environment
- User and Community Needs

6.2. User Sighting Distance

Assessment for sighting distance comprises a site visit specifically assessing pedestrian sighting compromises of the intended pedestrian assess route. The use of ALCAM sighting data may also be considered where specific sighting quadrant compromises have been identified.

Type P1 generally is not deemed appropriate for most pedestrian access crossings on the CRN. However, consideration of this type of protection could be considered appropriate where a risk assessment has been completed and the eligibility criteria contained within Table 1 has been met including sighting distance assessment for the use of this protection.

Generally, Type P2 protection is considered the minimum pedestrian access treatment on the CRN.

- When site assessing sighting distance the following should be considered:
- Typical user eye levels
- The possibility of rail or other vehicles standing on or adjacent to sidings
- The effect of platforms and station buildings and other fixed
- structures such as overhead wiring structures.
- Local weather patterns, such as a high incidence of fog, shall also be considered.

6.3. Train Speed

The typical speed of rail traffic approaching all directions of the pedestrian crossing is to consider within the risk assessment.

© State of NSW through Transport for NSW 2024

OFFICIAL

The highest speed board should be considered fundamental where making an assessment. However, where it is identified that typical train speed is significantly less than advised speed boards this may also be noted within the assessment.

Generally, train speed is considered

- Low where speed is no greater than 60 km/h
- Medium where speed is between 60 km/h and 80 km/h
- High where speed is greater than 80 km/h

6.4. Pedestrian Usage Rates

Typical pedestrian usage rates should form part of the risk assessment.

Usage rates should be considered into four broad categories.

Occasional Usage

- Generally, only one or two pedestrians at any one-time, prolonged gaps between pedestrians, no noticeable peak period.
- Generally, less than 20 uses a day

Low Usage

- Average peak maximum usage of 10 per hour or less.
- Generally, sporadic use typically less than 50 uses per day in a communal but non-urban environment.
- Typically connects to established pedestrian routes or forms part of typical community access paths.

Moderate Usage

- Average peak usage of 15 per hour or less.
- Generally, continual use more than 50 uses per day in a communal or semi-urban type of environment.
- Connects to established important pedestrian routes within the community that may interconnect with typical traffic lights interfaces

High Usage

- Average peak usage of 15 per hour or more.
- Generally, continual use typically more than 100 uses per day urban type of environment.
- Connects to established important and usually primary pedestrian routes within the urban community.

© State of NSW through Transport for NSW 2024

OFFICIAL

- Forms a primary pedestrian route interconnected with typical traffic lights interfaces within established traffic

6.5. Special User Needs

Special consideration must be given to the class of protection to be provided at pedestrian crossings where:

- The crossing provides the primary access to a platform or platforms for which there are regular scheduled rail services, particularly where the crossing is over double liners.
- The crossing provides access to a school, or for school children to reach a school bus or transport to school etc.
- Community need has identified specific users are required to use the pedestrian crossing where a disability or mobility restrictions impact user's ability to use the crossing normally

6.6. Crossing Environment

Consideration of the crossing environment should be given in terms of the type of protection to be provided.

The following considerations should be assessed with the risk assessment:

- Existing fencing, mazes, and how the new crossing will form part of, and interface with the established existing pedestrian network.
- Where houses, buildings, and other physical restrictions will impact the route of the pedestrian crossing.

6.7. User and Community need

Consideration should also be given in relation to community need both in terms of current uses of the site and potentially future uses should they be known.

Initial assessment may indicate an immediate form of protection being adopted. Community development may lead to significant change in terms of usage that may affect the choice protection chosen.

Similarly, a community need assessment should also include the possible future development in terms of closure. Particularly where the pedestrian route or community needs change.

Consideration should be given to the possibility of future rerouting of a desired pedestrian route. Developments of an alternate or grade separated route may render the current pedestrian crossing superfluous.

As best is possibly known, assessments should also include the potential impacts of these likely developments.

© State of NSW through Transport for NSW 2024

OFFICIAL

6.8. Pedestrian Grade Separation

If it is identified that risks in relation to an at-grade pedestrian crossing are untenable then consideration should be given in terms of providing a grade separated solution.

Considerations towards a grade separated solution would be:

- Where pedestrian traffic is high and crossing closure are a regular occurrence to the point the crossing is closed more often than open.
- Where significant pedestrian queueing of more than 25 people is a regular occurrence.
- If the crossing forms part of a regular pedestrian route at an intermodal interchange terminal.

Table 1 – Pedestrian Level Crossing Assessment

Category	Pedestrian protection	Usage risk guide.
Type P1	Warning Signs Only	• Single track • Occasional or low volume rail traffic • Low speed rail traffic • Occasional pedestrian use • Pedestrian route does not link to established (Road • Authority) footpaths, walkways, or pedestrian network • Sighting distance meets minimum criteria • No special use criteria • No community needs
Type P2	Warning Signs Passive Pedestrian Maze.	• Single track or main and loop track arrangement. • Low to medium volume rail traffic • High speed rail traffic • Low to Moderate pedestrian use • Pedestrian route generally links to established (Road • Authority) footpaths, walkways, or pedestrian network • Sighting distance meets minimum criteria • Generally, no special use criteria • Identified some community needs

© State of NSW through Transport for NSW 2024

OFFICIAL

Category	Pedestrian protection	Usage risk guide.
Type P3	Warning Signs Fencing Lights and Audible Warning	• Single track, double track, or main and loop track arrangement. • Medium to high volume rail traffic • Moderate to high speed rail traffic • Moderate to high pedestrian use • Pedestrian route links to established (Road Authority) footpaths, walkways, or pedestrian network • Sighting distance fails to meet minimum criteria • Identified special use criteria • Significant community needs identified
Type P4	Warning Signs, Fencing Lights, Audible Warning, Barriers	• Single track, double track, or main and loop track arrangement. • Medium to high volume rail traffic • Moderate to high speed rail traffic • High pedestrian use • Pedestrian route links to established high usage urban environment (Road Authority) footpaths, walkways, or pedestrian network • Sighting distance fails to meet minimum criteria • Identified significant special use criteria • Significant community needs identified
Grade Separation	Underpass or Overbridge	• Extreme pedestrian grade crossing risks identified • Single track, double track, or main and loop track arrangement. • High volume rail traffic • Moderate to high speed rail traffic • High pedestrian use • Pedestrian route links to established high usage urban environment (Road Authority) footpaths, walkways, or pedestrian network • Extreme sighting distance failures to meet minimum • criteria • Identified significant special use criteria • Significant community needs identified

© State of NSW through Transport for NSW 2024

OFFICIAL

7. Pedestrian Level Crossing Controlled by Lights Only

7.1. Introduction

This section addresses the requirements for pedestrian level crossings controlled by red lights and supplemented by controlled volume audible warning devices. It includes the mode of operation of the level crossing and the method of determination of appropriate crossing controls. This covers operation by train detection and excludes shunter operated level crossings.

7.2. Provision of the Particular Arrangement

This particular arrangement shall only be provided where a public pedestrian way intersects a single line railway and there is no more than a moderate volume of pedestrian and rail traffic.

7.3. Local & Environmental Requirements

The pedestrian crossings will be illuminated generally to conform to AS 1158.3 at level P1.

Battery supplied warning light circuits shall be provided in new works.

Additional warning lights may need to be provided following assessment of the crossing.

7.4. Sequence of Operation

If no train is approaching the pedestrian level crossing, then the red man warning lights shall be extinguished, and the audible warning devices shall be silent (In Queensland a green walking man signal is to be displayed when the red man is extinguished).

If a train is approaching the pedestrian level crossing and reaches the “strike in” point, then the red man warning lights shall commence flashing and after 15 seconds display and maintain a steady red man indication. The audible warning devices shall commence and continue to sound until the train has passed clear of the crossing.

Once the rear of the train passes clear of the pedestrian level crossing then the red man warning lights shall become extinguished (In Queensland a green walking man signal is to be displayed when the red man is extinguished) and the audible warning devices shall be silenced.

7.5. Warning Time

The warning time interval between the red warning lights being displayed and a train travelling at the maximum permissible speed applicable to the pedestrian level crossing arriving at the level crossing shall be designed to provide a minimum of 20 seconds warning.

The warning time shall reflect the greater of 20 seconds or the calculated walk speed + 2 seconds. The walk speed shall be calculated for the crossing using 1.0 ms^{-2} or 0.8 ms^{-2} in the case where disabled people use the crossing. Refer to Figure F2 in AS 1742.3

© State of NSW through Transport for NSW 2024

OFFICIAL

7.6. Crossing Controls

The operation of the pedestrian level crossing shall be initiated and maintained automatically by the occupation of a controlling section of track on the approach side to the level crossing.

The length of the controlling section of track shall be determined to ensure that the prescribed warning time can be met.

If bidirectional movements take place, then controls shall also be provided to prevent the continued operation of the level crossing when a departing train occupies the section of track circuit controlling the operation of the level crossing for trains approaching in the normal direction.

Controls for bi-directional operation shall be proved to have operated correctly in signal circuits, staff lines or by other approved techniques.

It is permissible to locate the crossing in the centre of the tuned loop of a jointless track circuit.

8. Pedestrian Level Crossing Controlled by Lights and Barriers or Swing Gates

8.1. Introduction

This Principle addresses the requirements for pedestrian level crossings controlled by red lights and barriers or swing gates and supplemented by controlled volume audible warning devices. It includes the mode of operation of the level crossing and the method of determination of appropriate crossing controls. Barriers should preferably be type approved swing gates. This covers operation by train detection and excludes shunter operated level crossings.

Note that in Victoria, only swing gates may be installed.

8.2. Provision of the Particular Arrangement

This particular arrangement shall be provided where a pedestrian way intersects two or more lines of a railway and there is a moderate volume of pedestrian and rail traffic, or where a pedestrian way intersects a single line railway and there is a high volume of pedestrian and rail traffic.

On single lines barriers or swing gates may be installed following the outcome of a risk assessment.

8.3. Local & Environmental Requirements

The pedestrian crossings will be illuminated generally to conform to AS 1158.3 at level P1.

Battery supplied warning light circuits shall be provided in new works.

Additional warning lights may need to be provided following assessment of the crossing.

© State of NSW through Transport for NSW 2024

OFFICIAL

8.4. Sequence of Operation

If no train is approaching the pedestrian level crossing then the warning lights shall be extinguished (except in Queensland where a green man symbol shall be displayed), the barriers shall be in the fully open position and the audible warning devices shall be silent.

If a train is approaching the pedestrian level crossing and reaches the “strike in” point then the warning lights shall display a flashing red man symbol for 15 seconds followed by a steady red man symbol. The audible warning devices shall commence and continue to sound on the approach of the train.

Seven (7) seconds after the warning has commenced the barriers or gates shall commence to close.

After a further minimum of 5 or maximum of 10 seconds, the barriers or gates shall reach the fully closed position.

The front of the fastest approaching train shall not reach the level crossing in less than the minimum warning time.

When the rear of the approaching train passes clear of the level crossing then either the barriers or gates shall commence to open, and the audible warning devices shall be silenced.

After a maximum of 10 seconds, either barriers or gates shall reach the fully open position and the warning lights shall become extinguished.

8.5. Warning and Operating Times

Where the pedestrian warning system is provided at a road crossing it shall operate to the same times and to the same warning sequence as the road crossing.

For standalone crossings the warning time interval between the red man warning lights commencing to flash and the front of a train travelling at the maximum permissible speed arriving at the pedestrian level crossing shall be designed to provide 25 seconds minimum warning.

The minimum warning time shall be increased above 25 seconds if the time for gates to close plus the calculated walk time + 2 seconds is greater than 25 seconds. The walk time shall be calculated for the crossing using the crossing width and a walk speed of 1.0 ms^{-2} or 0.8 ms^{-2} in the case where disabled people use the crossing.

8.6. Crossing Controls

The operation of the pedestrian level crossing shall be initiated and maintained automatically by the occupation of controlling sections of track on the approach to the level crossing.

The length of this controlling section of track shall be determined to ensure that the prescribed warning time can be met.

© State of NSW through Transport for NSW 2024

OFFICIAL

If bi-directional movements take place then controls shall also be provided to prevent the continued operation of the level crossing when a departing train occupies the section of track circuit controlling the operation of the level crossing for trains approaching in the other direction.

These controls shall be proved to have operated correctly in signal circuits, staff lines or by other approved techniques.

It is permissible to locate the crossing within the tuned loop of a jointless track circuit, if it is a separate pedestrian crossing.

9. Shunter Operated Level Crossings

9.1. Introduction

Where a Type F level crossing (with or without booms) is provided in a shunting area, the crossing may be protected by ‘STOP’ boards in either direction facing rail traffic.

The two types of crossings to be considered in this section are:

- Level crossings without track circuits (Figure 5)
- Level crossings with a local cancelling track circuit. (Figure 6)

9.2. Level Crossings without Track Circuits

Where a Type F level crossing is provided and track circuiting is not feasible or required, the shunter’s control is to be by Shunter’s Switches or Push Buttons arranged in a two-way switching arrangement. The shunter’s switches are provided in a locked box adjacent to the ‘STOP’ boards (Figure 7). A battery backup is not required in the design unless the local power supply is intermittent.

9.3. Level Crossings with a Local Track Circuit

Where a Type F Level Crossing is provided and track circuiting is provided to automatically cancel the crossing after the passage of the train, Shunter’s pushbuttons labelled “Start” and “Cancel” are to be provided on either side of the crossing adjacent to the Stop Board. The cancelling track is to span the road rail intersection and cause the crossing to operate while it is occupied.

Operation of the ‘Start’ pushbutton shall cause the crossing to operate. Operating the ‘Cancel’ button or a train occupying the track circuit is to reset the start command. To avoid the unnecessary operation of the crossing with power supply interruptions, a battery backup supply is to be provided.

© State of NSW through Transport for NSW 2024

OFFICIAL

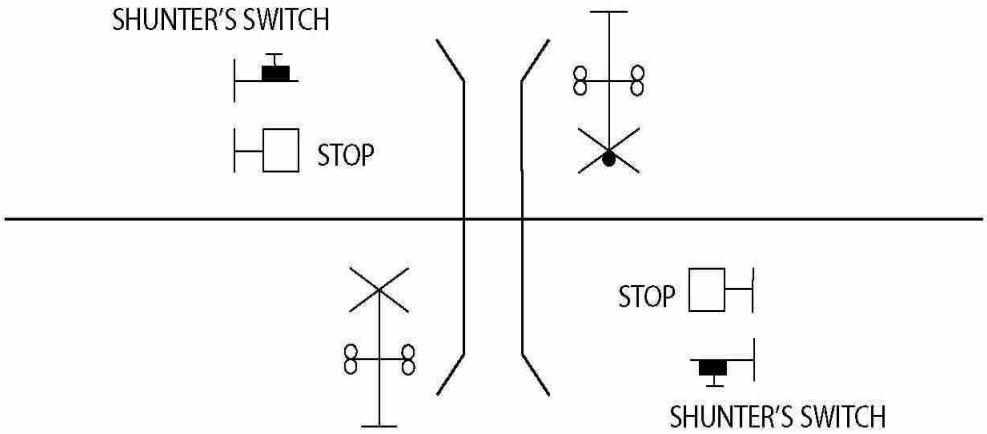

Figure 5 – Crossing without Track Circuit

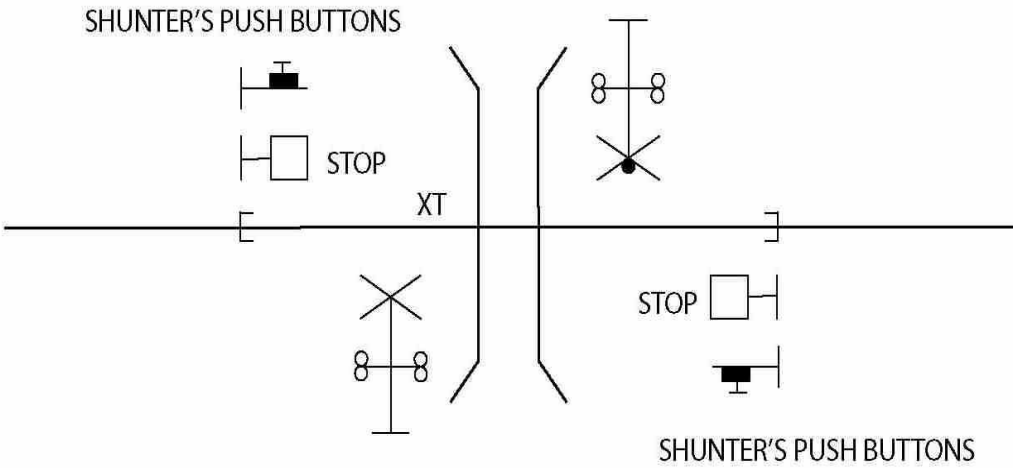

Figure 6 – Crossing with Track Circuit and Push Buttons

Figure 7 – Level Crossing Shunter Push Button activated STOP board

© State of NSW through Transport for NSW 2024

OFFICIAL

10. Level Crossings Near Interlockings & Sidings

10.1. Introduction

At locations where protected level crossings exist at interlockings, arrangements need to be made to prevent unnecessary operation of the level crossing warning equipment while trains are shunting at the interlocking, standing at platforms, or waiting (for some other reason) on the level crossing warning approach track circuiting.

10.2. Requirement

Where trains regularly approach level crossings, but where the movement over the crossing is not to be made for some time, the level crossing warning should not operate until the train is ready to proceed.

If this is an infrequent occurrence, time out type arrangements may be used to cancel the level crossing warning operation after the train has come to a stand.

However, where trains regularly approach the crossing but do not proceed over the crossing, the crossing warning should not operate on the train's initial approach.

10.3. Crossing Warning Cancelled after Train Comes to a Stand

This section applies to level crossings where shunting occurs less than twice per day and the intersecting road has moderate to low traffic volumes. In the situation where a siding exists within the approach track circuit of a level crossing, or where trains would come to a stand on the approach track for an extended period it is necessary to provide arrangements to permit the level crossing warning to be cancelled.

© State of NSW through Transport for NSW 2024

OFFICIAL

Train Order Working Areas (For Per Way and other little used sidings)

Arrangements should consist of a mechanical duplex lock located on a Mechanical Point Indicator, or adjacent to a trailable points mechanism or points lever, whereby one lock is unlocked by an operator's key or master key releasing the key from the other lock to operate the ground frame, trailable points lever or other points lever. Removal of the key for the ground frame puts the Mechanical Point Indicator to stop and makes an electrical contract to cancel the level crossing operation. Removal of the key for the trailable points lever or other points lever also makes an electrical contact on the duplex lock to cancel the level crossing warning operation. After restoring the key for the ground frame to its lock on the ground frame, the Mechanical Point Indicator clears, and the level crossing warning begins to operate with the train on the approach tracks. At this time the operator's key can be removed from the lock. Restoration of the key to duplex locks in the other cases also restores normal operation of the level crossing warning system. Refer to Figure 8.

General

If, after cancellation, shunting is to occur across the level crossing, then push buttons must be provided to initiate and cancel level crossing warning operation.

If the level crossing is in close proximity to the duplex lock the train crew will be aware of their interaction with the level crossing. If there is an area of the level crossing approach not cut out by the operation of the duplex lock, an approach section indicator board or other signage should be provided. Refer to Figure 9.

Special care needs to be taken with these arrangements to ensure reliable proving of direction stick functions, to prevent the proving circuitry from timing out and unnecessary operation of the crossing during shunting. Where these arrangements are difficult to apply or other operational requirements apply, a signal (or Main Line Indicator) should be installed.

10.4. Level Crossings Protected by Signals or MLI's and placement in proximity to roadways

Where trains regularly approach level crossings more than once per day and the movement over the crossing is not to proceed for operating reasons for example where shunting occurs, then a signal (or a Main Line Indicator) should be provided to regulate the level crossing operation. Refer to Figure 10.

This signal or Main Line Indicator may be operated by one of the following methods:

- Operators/safeworking Key and/or duplex lock
- Driver's push buttons
- Remotely controlled via the level crossing monitor or other remote control system
- Other method suitable for the situation

© State of NSW through Transport for NSW 2024

OFFICIAL

When the arrangement requires the signal or Main Line Indicator (MLI) to be usually cleared the track circuited approach must be arranged for the fastest non-stopping train, and time releasing of approach locking is to be provided.

To reduce SPAD risks associated with Signal and MLI placement in proximity to the road crossings, where practical, the Signal or MLI should be placed back from the road crossings a minimum of 200 m or the maximum amount up to this point that the layout of the site allows (refer Figure 10).

10.5. Power Arrangements and Circuit Configuration

Where normal and back up AC is available, Signal's and MLI's operating circuits shall be AC fed.

Signals or MLI's provided to qualify level crossing approach section where no backup AC supply exists shall be DC operated and a separate battery backed up Signal bus shall be provided.

All systems regardless of the power supplies, must be configured that a failure of the signal lights (or main line indicator lights) causes the qualification of the approach sections provided by the signal or MLI to be ineffective.

Control functions whose failure cause operation of the level crossing must be powered from the level crossing backup battery

Level crossing monitors should be powered from the level crossing battery to allow remote alarm of any power failure.

10.6. Special Arrangements

Where a level crossing is remote, and signals or main line indicators are provided to protect the crossing, a failure of an approach track circuit, may after the elapse of a suitable time period, replace the signal or main line indicator to stop. Following the release of any approach locking it is permissible to qualify the level crossing operation and thus prevent unnecessary level crossing operation.

© State of NSW through Transport for NSW 2024

OFFICIAL

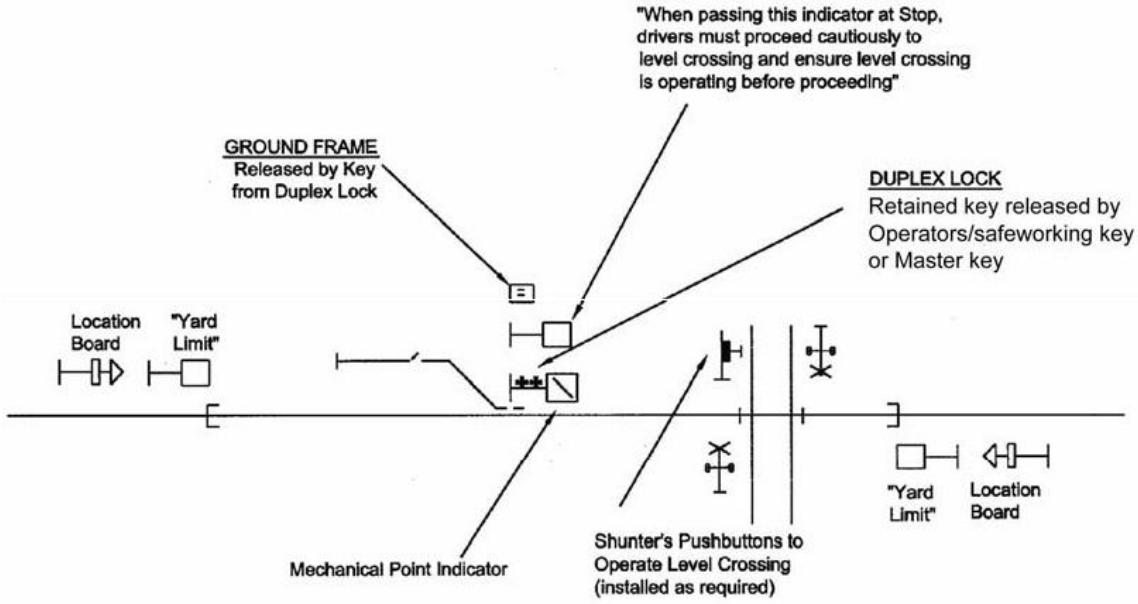

Figure 8 – Level Crossing in TO Territory

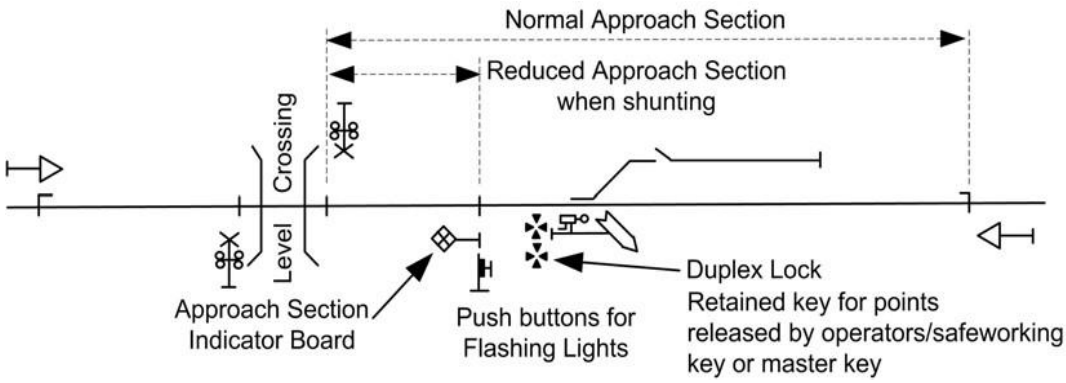

Figure 9 – Level Crossing in TOW Territory

11. Level Crossing Operations in Train Order

11.1. Introduction

Where level crossings are located in Train Order areas and trains stop or shunt within the approach sections, additional controls to prevent unnecessary operation of level crossing may be required. If shunting takes place less than twice per day and the intersecting road has low to medium traffic volumes the arrangements discussed in section 9 should be used. At locations which fall outside this criteria, Main Line Indicators or signals will be needed to regulate the operation of the level crossing when shunting is taking place on the approach track circuits.

© State of NSW through Transport for NSW 2024

OFFICIAL

The aim is to:

- Ensure the level crossing only operates when necessary on train approach.
- As far as possible, minimise level crossing operation during shunting.
- As far as possible maintain warning times so that neither inadequate nor excessive warning is given.

This description focuses on the use of Main Line Indicators; however, these concepts also apply to signals used for the same purpose.

11.2. Application

The Main Line Indicators or signals may be configured to be:

- Normally clear – the usual application where trains do not stop on the approach
- Normally at stop and cleared for each train – used when most trains stop on the approach,

The Main Line indicator or signal shall be preceded by another signal or mainline indicator or landmark.

11.3. Normally Clear Indicators

- As the travel time over the approach track circuits is likely to be less than the time required to brake from line speed, all MLIs used for qualification of approach track circuits shall incorporate time locking to a minimum of 2 minutes.
- MLIs protecting a level crossing requires track circuit cancellation which prevents the MLI reclearing for a train in the departing direction (i.e., away from the facing direction of the indicator).
- In addition to these requirements, the design of the MLI will must be in accordance with the train order infrastructure requirements
- Where points are located in advance of the MLI, a Duplex Lock will be provided (released by Operators/safeworking Key and releases key for the frame or single lever). Operation of the Duplex Lock will place the MLI to stop to qualify the level crossing approach. Reclearing of the MLI to occur under two conditions as follows:
    - When the Duplex Locks are restored and the track circuits are clear, (i.e., the train has left or is wholly within the loop).
    - When the Operators push button is pressed.
- Shunters push buttons may be provided at the crossing for activation during shunting movements.

© State of NSW through Transport for NSW 2024

OFFICIAL

- When shunters pushbuttons are provided for operating and cancelling the crossing, lockout timing should always be provided to prevent manipulation of the buttons causing the booms to change direction mid-rise.
- Operators push buttons for clearing of the MLI (and cancelling) are to be located at the MLI. Additional push buttons may be located adjacent to points from which trains may depart if required. Operation of a push button may override a Duplex Lock being reverse, to facilitate departure from the loop past the MLI to satisfy operating requirements.
- Designers should consider the possibility that Duplex Locks may be operated irregularly (for example after a through train has passed a frame in anticipation of one leaving a loop). Consequently, quick releasing of time locking should not be provided while a train is on the approach track sections.
- Quick releasing of time locking should be provided for reverse movements to the direction to the MLI. This quick releasing path must be carefully designed to ensure a single point failure will not override the timing function incorrectly.
- When MLI's at level crossings clear five types of interlocks are normally used:
    - The MLI may clear immediately if there is no train approaching
    - The indicator will clear, and the level crossing operates together. This will apply if the train will have reduced speed, the MLI is set back far enough from the crossing so that the crossing would have operated for a sufficient time before the train reaches it.
    - The level crossing operates for a time before the MLI clears and the distance to the crossing is sufficient such that a full warning time will be achieved. This generally applies if the MLI is located some distance back from the crossing within the full speed approach section.
    - The crossing operates initially for either 10-15 seconds (or until the booms are lowered) before the MLI clears. This generally applies if the MLI is located at the crossing.
    - The indicator will clear, and the level crossing will then operate when the approach track is occupied by the train.
- Detection of the MLI red aspect lit is to be proved in the approach locking function. See Figure 10.3

11.4. Normally at Stop Indicators

- These present less difficulties than normally clear indicators as there should be no scenario where they are placed to stop in advance of a train.
- Clearing of these MLI's is the same as for normally clear indicators.

© State of NSW through Transport for NSW 2024

OFFICIAL

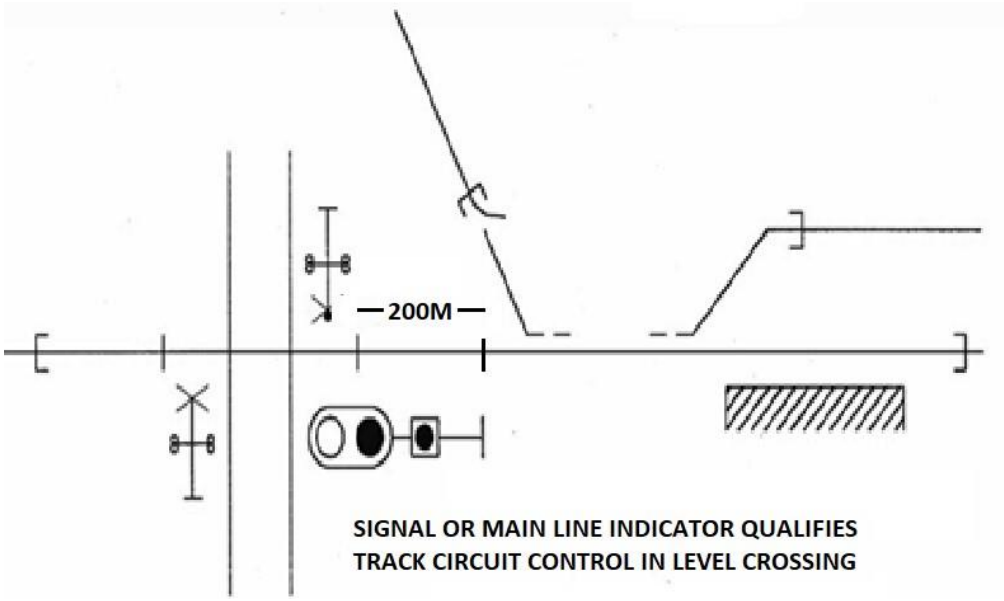

Figure 10 - Mainline Indicator application

12. Level Crossing Interfaces to Road Traffic Lights

12.1. Introduction

Where a level crossing is located next to a set of traffic lights, the potential exists for motor vehicles to stop at the traffic lights and queue back across the railway or for a queue at a level crossing to obstruct the intersection behind. Where this occurs, interconnection between level crossing controls and the traffic lights are usually provided to assist in minimising this problem.

12.2. Rail Signal and Road Signal Co-ordination

12.2.1. Requirement

The requirement is to co-ordinate railway level crossing operation with the operation of nearby traffic signals to ensure that the operation of one facility doesn't adversely impact on the safe operation of the other. In addition, the facilities and the interface between them need to be designed to minimise delays to both railway and road vehicles.

In order that the traffic lights can remove traffic conflicts with the level crossing operation, an advanced indication of train approach needs to be provided to the traffic lights controller. In this standard this is called the Train Demand (TD).

The road authorities in each state have their own descriptions for each coordination function and some of the functions operate differently. Section 11.3 covers this

The road authority will specify the Train Demand Response Time required.

In response to the Train Demand, the Road Authority will program the traffic lights cycles to

- Prevent through road traffic being directed onto the level crossing while it is operating and

OFFICIAL

- Clear road traffic queued across the level crossing (Clearance Phase).

The worst-case time for the traffic signals to reach Clearance Phase and the minimum duration of the Clearance Phase are determined by the road authority for each intersection.

When traffic lights are provided on both sides of the railway, the road authority will arrange the traffic light phasing so as to prevent a queue from forming, as far as practical. This may reduce the criticality of the clearance phase.

Where a traffic light is located prior to the level crossing or at the level crossing, it will be co-ordinated by the Road Authority to display 'stop' whenever the Type F lights are operating.

12.2.2. Traffic Light Train Demand point

Where possible the Train demand initiation point should be aligned with the start of the holding section for the crossing. If necessary, the train demand initiation point shall be extended to accommodate this. In this case where the holding section is longer than the train demand time required by the Road Authority it shall be delayed by the time difference.

12.2.3. Automatic Signals within the Train Approach Zone

In this situation the signal is not interlocked with the traffic lights. A Train Demand input will be provided to the road authority when the train approaches. This input is to be timed off and if a traffic light response is not received by the time the traffic lights demand time has expired a force shall be applied to the traffic lights controller.

The traffic lights will cycle through to Clearance Phase before activation of the level crossing. Activation of the crossing will occur when the train reaches the level crossing approach track section.

12.2.4. Controlled Signals Within the Train Approach Zone.

In this situation, the road authority will provide a Traffic Light Response (TLR) function to the level crossing.

When a rail movement is to be made, the Train Demand indication is provided to the traffic lights controller when the train approaches (with the signal clear) or the signal route is set (if a train is closely approaching). If the traffic lights cycle to the clearance phase earlier than the train demand time, an indication (Traffic Light Response) is provided to the rail signal system.

If a train is within the zone covered by the traffic light demand time, signal clearing must be delayed until the traffic lights are in the clearance phase or until the traffic lights demand time has expired. The TLR enables the Rail Signal clearing to progress without waiting for the expiration of the full Train Demand Response Time.

The level crossing activation is governed by the train being within the approach section. If the train is within the approach section when the signal is cleared the receipt of the TLR allows the activation of the crossing to commence immediately and this activation allows the interlocks

© State of NSW through Transport for NSW 2024

OFFICIAL

between the signal and the level crossing to be fulfilled, thus allowing the signal to clear earlier than if the full train demand time was satisfied.

The TLR will be sent from the traffic lights controller at a given time after the start of the clearance phase (the time delay is usually queue clearance time minus the gate delay).

Should the Traffic Light Response not be received a force must be sent to the traffic lights controller and the activation of the level crossing must be initiated at the expiry of the Train Demand Response Time.

12.3. Interface Controls

Interface controls should be arranged to accord to the agreed rail – road coordination scheme for the State concerned.

The interface between the rail and road signals shall constitute functions which are transmitted as voltage-free contacts for electrical isolation.

Table 2 and Table 3 below show the co-ordination schemes in use.

Table 2 – Rail to Road Controls

Function used in this Standard	NSW Name	VIC Name	Description of Function
Train demand (normally open)	Train demand (n/o).		Given as closed contact at the nominated train demand point prior to the crossing control point and is to remain until the train has cleared the crossing.
		Call	Given at the nominated train demand point prior to the crossing control point and is to remain until the train has cleared the approach section.
Train demand (normally closed).	Train demand (n/c).		Given as open contact at the nominated train demand point prior to the crossing control point and is to remain until the train has cleared the crossing.
Force	Crossing lights control (n/c).		Given as open contact at the crossing control point and is to remain until the flashing lights have ceased.
		Force	Given as open contact following the call at the crossing control point and is to remain until the flashing lights have ceased. If given before call, the traffic lights are forced to flashing amber mode.
Release	Crossing lights control (n/c).		Given as closed contact when the flashing lights have ceased and is to remain until the flashing lights have commenced again.

© State of NSW through Transport for NSW 2024

OFFICIAL

Function used in this Standard	NSW Name	VIC Name	Description of Function
		Release	Given as closed contact when the flashing lights have ceased until the earlier of after the call has been applied or at the crossing control point whichever is sooner.
Traffic lights response.	Traffic lights response.		Closed contact when TLR is received.
Closed loop.		Closed Loop.	Open circuit when coordination cable broken (traffic lights forced to flashing amber).

Table 3 – Road to Rail Controls

Function Name	NSW Name	VIC Name	Description of Function
Traffic lights response	Traffic lights response		Voltage free contact closure given when traffic lights are in clearance phase, dependent on train demand being present.
		Traffic lights response	Voltage free contact closure given when traffic lights are in clearance phase, dependent on train demand being present. Not given when traffic lights are in flashing amber mode.
Closed Loop		Closed Loop	Open circuit when co-ordination cable broken (traffic lights forced to flashing amber).

12.4. Manual Operation and Test Switch Operation

The operation of the Manual Operation or Test Switch is different for each coordination scheme.

The differences are shown below:

NSW

- When the level crossing is being operated by the Manual Operation or Test Switch the level crossing will not activate immediately.
- The Train Demand (TD) is applied.
- The level crossing is activated when the Train Demand Response Time period expires, and the force is applied.
- The level crossing may also be activated by receipt of the Traffic Light Response from the road traffic signals, if the train is within the crossing area.

The Clearance Phase commences at or before the time of level crossing operation and should not end until after the crossing operates. This is to prevent the queue from extending by more cars entering the crossing area. The actual end point may be extended by the road authority if a

© State of NSW through Transport for NSW 2024

OFFICIAL

queue is detected. However, it will not be prior to the commencement of boom operation, where booms are provided.

Cessation of the Clearance Phase is based upon the application of the Force Control.

12.5. Requirements for Boom Gates

When an interface with traffic lights is to be provided on a Type F crossing the installation of boom gates shall be considered a requirement as part of the installation.

It is necessary to install boom gates in all instances where the boom operation is an essential part of preventing a queue reforming over the crossing when the clearance phase on the traffic lights ahead is terminating.

While not the preferred arrangement, where separate traffic light installations exist on either side of a Type F crossing, the site may be assessed to be installed without booms. It may not be necessary to provide the booms in this instance where the traffic light interfacing ensures that vehicles will not come to a stand across the road – rail intersection.

Should a site be recommended to be installed without booms the site should be risk assessed in relation to not having barriers. Impacts to not including booms and potential traffic queuing issues must be considered fundamental in any risk assessment.

12.6. Other Co-ordination Controls

The Road Authority may request other control functions from the rail interface to optimise control of the traffic lights system especially at road intersections.

These include:

- Booms down
- Crossing control relay energised.

13. Operation of Advanced Warning Lights for Level Crossings

13.1. Introduction

This principle addresses the requirements for Advanced Warning Lights for road traffic when integrated as part of the level crossing installation.

There are two schemes in use, Secondly, Local and Environmental Requirements

The preferred arrangement is those provided and maintained by the Road Authority and activated by a cable or radio interface installed adjacent to the level crossing control box where signalling control equipment provides a voltage free activation contact out of the control relays.

© State of NSW through Transport for NSW 2024

OFFICIAL

Secondarily are those provided and maintained by the CRN and wired directly into the level crossing control equipment.

Advance warning lights may be provided on one or both road approaches to the level crossing where the motorist's view of the Type F signals is compromised by the road layout or by other un-correctable obstructions or where a risk assessment deems them appropriate.

Figure 11 shows a typical roadside installation of an advance warning sign – see AS 1742.3 for details of the current sign design. Figure 12 shows a typical roadside application.

13.2. Sequence of Operation

If no train is approaching the level crossing then all warning lights shall be extinguished, any barriers shall be in the fully open position and the audible warning devices shall be silent.

If a train is approaching the level crossing and reaches the "strike in" point then the Advanced Warning Lights shall operate before the Type F lights are activated. This is to allow vehicles travelling at the road speed limit after passing the Advanced Warning Lights while extinguished to be able to pass through the crossing without the crossing commencing to operate before they arrive at it.

The Type F lights will then activate and the level crossing will follow its prescribed sequence of operation as required by the particular equipment arrangement.

The Advanced Warning Lights shall extinguish when the Type F lights extinguish.

13.3. Timing Requirements

The timing for starting advance warning lights before the level crossing warning is in the range of 5 to 17 seconds before level crossing start. It is calculated using the method shown in AS 1742 Clause 2.3.7 and Appendix E of the same document. All timing calculations should be agreed with the Road Authority. The approach section for the level crossing shall be extended to become the sum of the time required for the level crossing approach and the advance warning lights prestart time by the lengthening of the approach track circuit and crossing control delays implemented via vital timers or the addition of an extra track circuit. If the crossing has a holding section, the warning lights start can be generated by delaying this section of track.

13.4. Specific Requirements

Guidance for the use of Advanced Warning Lights together with recommended methods of locating these assemblies and setting their operational timing are provided in AS 1742.7 Section 2.3.7.

Where a Road Authority interface unit is provided this shall be driven off the crossing controls. Note that directional stick logic must also be implemented for the advance warning lights control.

© State of NSW through Transport for NSW 2024

OFFICIAL

If the warning lights are fed directly from the rail controls, the advance warning lights shall be wired so that each light on any one approach is separately fused and connected to a separate flasher

Figure 11 – Advanced Warning Sign

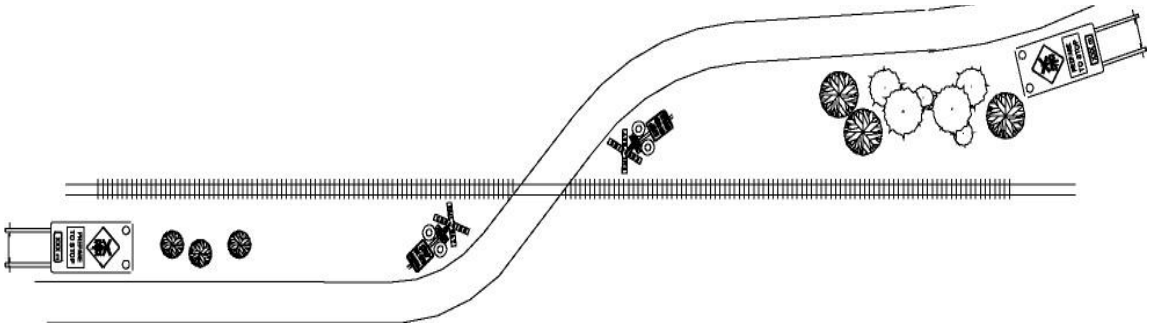

Figure 12 – Application of Advanced Warning Signs

14. Preferred equipment and telemetry arrangements for use on the CRN

14.1. Introduction

Table 4, Figure 13 and Figure 14 describe the current preferred equipment and telemetry arrangement in use on the CRN.

The use of alternate equipment must only be considered where approval has been given by the CRN Principal Signal & Comm. & Network Control Engineer or the CRN Signalling Manager.

© State of NSW through Transport for NSW 2024

OFFICIAL

Table 4 – Preferred Equipment and Telemetry Arrangement

Equipment	Detailed Description
Battery Charger	ATLAS (PIVOT) Modular Switch Mode Batter Charger with back plain
Batteries	375 Ah NiCAD wet cells
IP Watchdog	IP Watchdog 2 Lite
Ethernet Switch	Unmanaged ethernet switch MOXA EDS-205A-T
IP Web Relay	CONTROL by WEB – X–410-E
Modem	Cybertech 2455X-4G
Surge Equipment	Erico/ELSAFE/CRITECT/EXECTRONICS
Level Crossing LED Modules	ALDRIDGE 12V DC LED low current RK503FL-1 modules
Relays	BR930 Q Type Relays
Axle Counter	Frausher FADC R2
ELD	MRD ELD – AC/DC
Logging & Remote Monitoring	Cerberus Monitor V4.0
GCP	Siemens GCP 4000
CBI Interlocking	Microlok II
BOOM mechanisms	Western Cullen Gate Mechanism Model 3593
Cerberus Lamp Current Sensors	Fastron
Cerberus Battery Test sensor	
Flasher	Westinghouse Safeflash
Battery Voltage Monitor	ART/LEONARD electronics BVM XP3508-100
Level Crossing Solid State Controller	HIMA

© State of NSW through Transport for NSW 2024

OFFICIAL

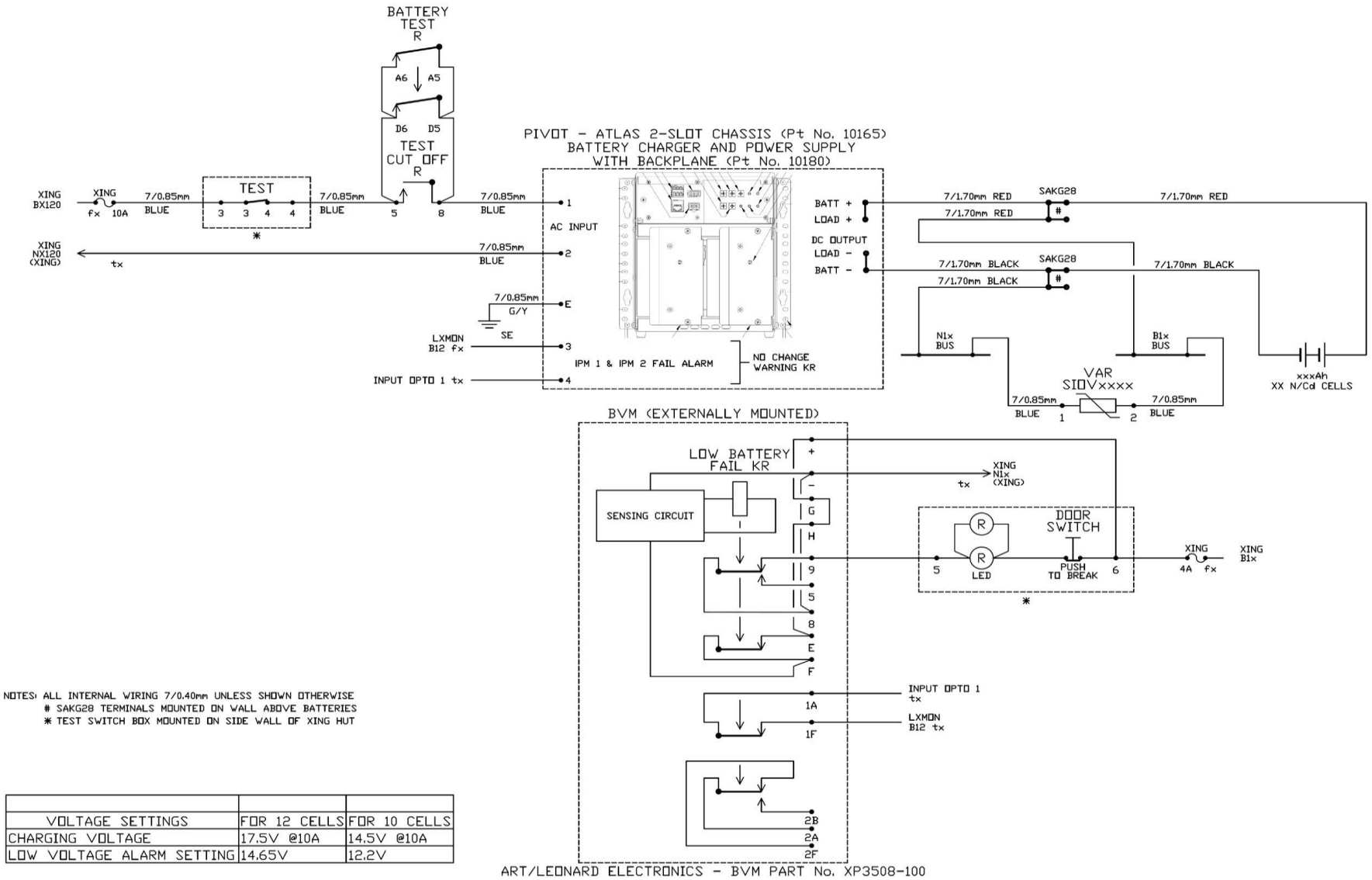

NOTES: ALL INTERNAL WIRING 7/0.40mm UNLESS SHOWN OTHERWISE
SAKG28 TERMINALS MOUNTED ON WALL ABOVE BATTERIES
* TEST SWITCH BOX MOUNTED ON SIDE WALL OF XING HUT

VOLTAGE SETTINGS	FOR 12 CELLS	FOR 10 CELLS
CHARGING VOLTAGE	17.5V @10A	14.5V @10A
LOW VOLTAGE ALARM SETTING	14.65V	12.2V

Figure 13 – Generic CRN Battery Charger Arrangement

© State of NSW through Transport for NSW 2024

OFFICIAL

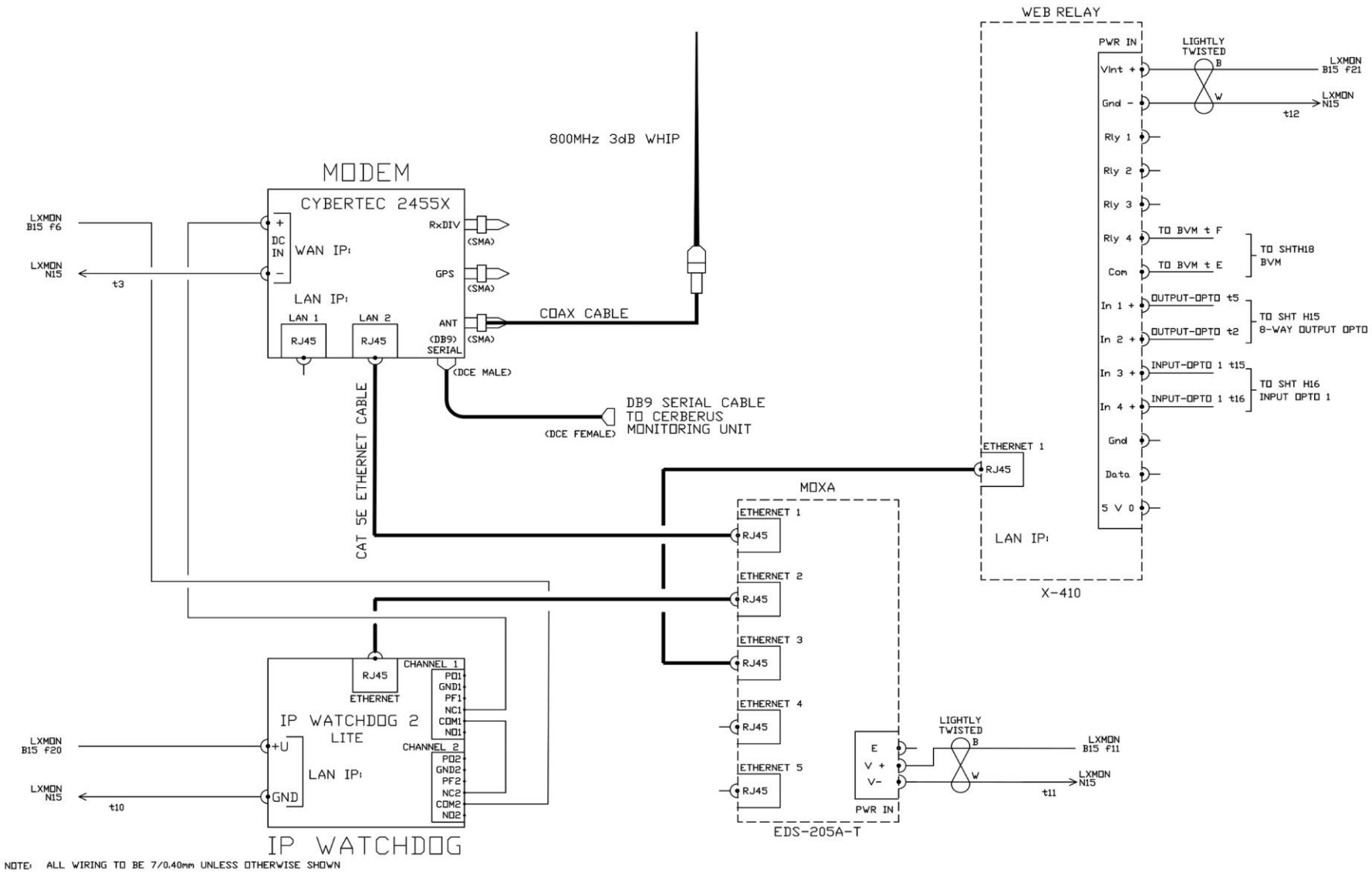

Figure 14 – Generic CRN Level Crossing Telemetry Layout

© State of NSW through Transport for NSW 2024

OFFICIAL