Transport Asset Standards Authority

T HR CI 12110 ST

Standard

Earthworks and Formation

Version 2.0

Issue date: 25 May 2018

© State of NSW through Transport for NSW 2018

Important message

This document is one of a set of standards developed solely and specifically for use on Transport Assets (as defined in the Asset Standards Authority Charter). It is not suitable for any other purpose.

The copyright and any other intellectual property in this document will at all times remain the property of the State of New South Wales (Transport for NSW).

You must not use or adapt this document or rely upon it in any way unless you are providing products or services to a NSW Government agency and that agency has expressly authorised you in writing to do so. If this document forms part of a contract with, or is a condition of approval by a NSW Government agency, use of the document is subject to the terms of the contract or approval. To be clear, the content of this document is not licensed under any Creative Commons Licence.

This document may contain third party material. The inclusion of third party material is for illustrative purposes only and does not represent an endorsement by NSW Government of any third party product or service.

If you use this document or rely upon it without authorisation under these terms, the State of New South Wales (including Transport for NSW) and its personnel does not accept any liability to you or any other person for any loss, damage, costs and expenses that you or anyone else may suffer or incur from your use and reliance on the content contained in this document. Users should exercise their own skill and care in the use of the document.

This document may not be current and is uncontrolled when printed or downloaded. Standards may be accessed from the Transport for NSW website at www.transport.nsw.gov.au

For queries regarding this document, please email the ASA at
standards@transport.nsw.gov.au or visit www.transport.nsw.gov.au

© State of NSW through Transport for NSW 2018

Standard governance

Owner: Lead Civil Engineer, Asset Standards Authority

Authoriser: Chief Engineer, Asset Standards Authority

Approver: Executive Director, Asset Standards Authority on behalf of the ASA Configuration Control Board

Document history

Version	Summary of changes
1.0	First issue 06 October 2015
2.0	The changes from the previous version include: • added additional information on test methods • revision of some of the definitions • new text to the standard content for clarity • added the content of technical note TN 033: 2016

© State of NSW through Transport for NSW 2018

Preface

The Asset Standards Authority (ASA) is a key strategic branch of Transport for NSW (TfNSW). As the network design and standards authority for NSW Transport Assets, as specified in the *ASA Charter*, the ASA identifies, selects, develops, publishes, maintains and controls a suite of requirements documents on behalf of TfNSW, the asset owner.

The ASA deploys TfNSW requirements for asset and safety assurance by creating and managing TfNSW's governance models, documents and processes. To achieve this, the ASA focuses on four primary tasks:

- publishing and managing TfNSW's process and requirements documents including TfNSW plans, standards, manuals and guides
- deploying TfNSW's Authorised Engineering Organisation (AEO) framework
- continuously improving TfNSW’s Asset Management Framework
- collaborating with the Transport cluster and industry through open engagement

The AEO framework authorises engineering organisations to supply and provide asset related products and services to TfNSW. It works to assure the safety, quality and fitness for purpose of those products and services over the asset's whole-of-life. AEOs are expected to demonstrate how they have applied the requirements of ASA documents, including TfNSW plans, standards and guides, when delivering assets and related services for TfNSW.

Compliance with ASA requirements by itself is not sufficient to ensure satisfactory outcomes for NSW Transport Assets. The ASA expects that professional judgement be used by competent personnel when using ASA requirements to produce those outcomes.

About this document

This standard sets out the requirements and guidelines for design, construction and maintenance of railway earthworks, which includes embankments, soil and rock cuttings and capping layer within the rail corridor.

The content of this standard is derived from the two pre-existing RailCorp documents – ESC 410 *Earthworks and Formation, version 2.0* and TMC 411 *Earthworks Manual, version 2.0.* Changes include reorganising the topics for clarity and consistency, adding new sections, improving content, and updating organisational roles and reporting structures.

This is the second issue of the standard. The changes to previous content in this issue include additional information on test methods, revision of some definitions, new text added for clarity and incorporated content of technical note TN 033: 2016.

© State of NSW through Transport for NSW 2018

Table of contents

1. Introduction ... 7

2. Purpose ... 7

2.1. Scope ... 7

2.2. Application ... 7

3. Reference documents ... 7

4. Terms and definitions ... 9

5. General requirements for earthworks ... 12

5.1. Safety ... 12

5.2. Environment and sustainability ... 12

5.3. Heritage ... 13

6. Design requirements ... 14

6.1. Design and investigation ... 14

6.2. Design flood level ... 22

6.3. Track formation ... 23

6.4. Train examination areas and walkways ... 24

7. Documentation ... 24

7.1. Investigation and planning documentation ... 24

7.2. Design and specification documentation ... 25

7.3. Construction documentation ... 26

7.4. Site records documentation ... 27

7.5. Handover documentation ... 27

8. Preparation for earthworks ... 27

8.1. Earthworks plan ... 28

8.2. Setting out of earthworks ... 29

8.3. Site clearing ... 29

8.4. Spoil ... 31

8.5. Borrow material ... 31

8.6. Drainage and erosion control during construction ... 31

9. Cuttings ... 32

9.1. Batter slopes ... 32

9.2. Benching ... 34

9.3. Excavation ... 34

9.4. Cutting floors ... 36

9.5. Cut to fill transition ... 37

9.6. Drainage of cuttings ... 38

9.7. Cutting construction tolerances ... 38

10. Embankments ... 38

10.1. Embankment material ... 38

10.2. Embankment design ... 39

© State of NSW through Transport for NSW 2018

10.3. Embankment construction ... 41
10.4. Test rolling (proof rolling) ... 45
10.5. Embankment profile ... 45
10.6. Embankment drainage and erosion control ... 45
10.7. Rock facing of embankments ... 47

11. Capping layer ... 47
11.1. Capping material sampling and testing ... 48
11.2. Preparation for capping ... 48
11.3. Spreading, placing, compaction and trimming of capping ... 48
11.4. Sub-ballast ... 48
11.5. Capping layer construction tolerances ... 49

12. Widening of existing embankments ... 49
12.1. Preparation for embankment widening ... 49
12.2. Drainage structures ... 50
12.3. Drainage blanket ... 50
12.4. Drainage and erosion control ... 50
12.5. Embankment construction ... 50

13. Earthworks near structures ... 50
13.1. Construction ... 51
13.2. Excavation near structures ... 52

14. Tolerances for earthworks ... 53
14.1. Vertical tolerances ... 53
14.2. Horizontal tolerances ... 54

15. Rehabilitation of formation ... 54

16. Inspection and assessment of earthworks ... 54
16.1. Management responsibilities ... 55
16.2. Scheduled inspections ... 55
16.3. Unscheduled inspections ... 55

Appendix A Single track cross section ... 57

Appendix B Double track cross section ... 58

Appendix C Typical earthworks construction ... 59

Appendix D Daily earthworks report ... 62

Appendix E Earthworks summary report ... 64

© State of NSW through Transport for NSW 2018

1. Introduction

Railway earthworks primarily refer to embankments, cuttings in soil or rock, and capping layer. The nature and characteristics of the constructed layers and subgrade play an important role for track support, track geometry, maintainability and drainage. Earthworks supporting the track and other railway infrastructure are designed and constructed in a consistent manner with due consideration to all engineering requirements and the whole asset life cycle.

2. Purpose

This standard establishes the design, construction and maintenance requirements and guidelines for earthworks on the railway corridor.

2.1. Scope

This standard sets out the requirements and guidelines for design, construction and maintenance of railway earthworks, which includes embankments, soil and rock cuttings and capping layers.

This standard does not cover the rehabilitation of existing track subgrade problems. Refer to T HR CI 12120 GU *Track Reconditioning Guidelines* for more information about track rehabilitation works.

2.2. Application

This standard applies to all mainline and siding tracks in the TfNSW rail corridor. This standard is intended to be used by persons carrying out earthworks and formation design, construction and maintenance.

This standard is not specifically intended to cover light rail systems or heritage railway operating on private reservations due to different loadings and configuration requirements. However, the principles of this standard and some requirements and guidelines may be applicable to the light rail environment.

3. Reference documents

The following documents are cited in the text. For dated references, only the cited edition applies. For undated references, the latest edition of the referenced document applies.

Australian standards

AS 1141.3.1 Methods for sampling and testing aggregates Method 3.1: Sampling-Aggregates

AS 1170.4 Structural design actions Part 4: Earthquake actions in Australia

© State of NSW through Transport for NSW 2018

AS 1289.0 Methods for testing soils for engineering purposes, Part 0: Definitions and general requirements

AS 1289.3.3.1 Methods of testing soils for engineering purposes - Method 3.3.1: Soil classification tests – Calculation of the plasticity index of a soil

AS 1289.5.1.1 Methods of testing soils for engineering purposes – Method 5.1.1: Soil compaction and density tests – Determination of the dry density/moisture content relation of a soil using standard compactive effort

AS 1289.5.2.1 Methods of testing soils for engineering purposes, Method 5.2.1: Soil compaction and density tests – Determination of the dry density/moisture content relation of a soil using modified compactive effort

AS 1289.5.3.1 Methods of testing soils for engineering purposes, Method 5.3.1: Soil compaction and density tests – Determination of the field density of a soil – Sand replacement method using a sand-cone pouring apparatus

AS 1289.5.8.1 Methods of testing soils for engineering purposes, Method 5.8.1: Soil compaction and density tests-Determination of field density and field moisture content of a soil using a nuclear surface moisture–Density gauge – Direct transmission mode

AS 1726 Geotechnical site investigations

AS 2187 Explosives- Storage, transport and use

AS 4799 Installation of underground utility services and pipelines within railway boundaries

AS 5100.2 Bridge design Part 2: Design loads

AS 7638 Railway Earthworks

Note: This standard is developed by RISSB

Transport for NSW standards

ESC 210 Track Geometry and stability

ESC 215 Transit Space

T HR TR 00192 ST Ballast

T HR CI 12101 ST Geotechnical Problem Management

T HR CI 12111 SP Earthwork Materials

T HR CI 12120 GU Track Reconditioning Guidelines

T HR CI 12130 ST Track Drainage

T HR CI 12130 MA Track Drainage

T HR CI 12190 ST Service installations within the Rail Corridor

© State of NSW through Transport for NSW 2018

T HR CI 12200 ST Access Roads

T MU MD 20001 ST System Safety Standard for New or Altered Assets

Legislation

Environmental Planning and Assessment Act 1979 (NSW)

Heritage Act 1977 (NSW)

National Parks and Wildlife Act 1974 (NSW)

Other reference documents

Charter Asset Standards Authority

Landcom 2004, Managing Urban Stormwater: Soils and Construction, Volume 1, 4th edition

Road and Maritime Services (RMS), 2014 QA Specification R44 – Earthworks; edition 5

Office of Environment and Heritage 2005, State Agency Heritage Guide – Management of Heritage Assets by NSW Government Agencies, publication number HO05/01

4. Terms and definitions

The following terms and definitions apply in this document:

AEO Authorised Engineering Organisation

ASA Asset Standards Authority

batter a constructed slope (cut or fill) commonly of uniform gradient usually expressed as a ratio of horizontal to vertical

borrow pit excavation made for the procurement of additional material (AS 7638)

capping layer a layer of compacted, specified coarse grained material that provides a sealing layer to the earthworks

CBR California bearing ratio – Load expressed as a percentage of a standard load, required to penetrate a specimen of soil for a specified distance at a given rate (AS 1289.0)

cohesionless soil material consisting mostly of sand and gravel mixture, generally with less than 5% fines (that is, particles finer than 75 µm diameter)

cohesive soil material consisting mostly of silt and clay and has a well-defined moisture-density relationship when tested in accordance with AS 1289.5.1.1 or AS 1289.5.2.1

collapsible soil A problematic soil that is stable in the natural state, but suffers a sudden decrease of volume after wetting, loading or a combination of both (AS 7638)

compaction process of packing soil particles more closely together by rolling or other mechanical means so that air is removed from the voids thus increasing the dry density of the soil (AS 1289.0)

© State of NSW through Transport for NSW 2018

contaminated materials contain substances or materials that may be considered, on the basis of applicable standards, undesirable or harmful to people, the environment, water supply or agriculture. (AS 7638)

cutting an earth and/or rock excavation that is made below an existing surface to create the railway formation (AS 7638)

dispersive soils soils that have the ability to pass rapidly into suspension in the presence of water (AS 1289.0)

earthworks an embankment, soil or rock cutting that is constructed to support the track structure

earthworks level level at the centre of the earthworks prior to placing of the capping layer

embankment an earth or rockfill structure above an existing and/or excavated surface to create the rail track formation

expansive soil soil that exhibits problematic volume change as a direct result of a change in soil moisture (AS 7638)

formation an earthworks structure including all foundation, structural treatment and capping layer, on which ballast is laid

formation level finished level at the top of capping at the centre of the formation preparatory to laying ballast

free-draining material hard, strong and durable particles, such as clean crushed rock, river gravel, slag, containing a low percentage of fines which can be enclosed in a layer of geosynthetic (AS 7638)

general fill the lower zone of the embankment comprising compacted fill material below the structural zone

geosynthetics the range of polymeric products comprising eight main categories: geotextiles, geogrids, geonets, geomembranes, geosynthetic clay liners, geofoam, geocells and geocomposites (AS 7638)

geotechnical engineer an appropriately qualified and experienced engineer, acting for an AEO, with relevant competencies for geotechnical risk assessment, geotechnical investigations, design, construction and maintenance activities relating to geotechnical assets

geotextile a permeable, polymeric (synthetic or natural) textile material, in the form of manufactured sheet, which may be woven, nonwoven or knitted

grubbing The removal of the base of stumps, roots, perishable material, underground parts of redundant structures, and other minor obstructions (AS 7638)

loess clastic, predominantly silt-sized cemented formation created by the accumulation of wind-blown material. Cemented bonds are destroyed when the formation becomes saturated

© State of NSW through Transport for NSW 2018

poor ground soil or rock in embankments and cuttings which, for example, does not provide adequate foundation for the placement and compaction of fills, or placement of railway ballast and track (AS 7638)

rail corridor The land between the boundary fences over which a railway line passes or, where there are no fences, the extent of land owned, leased or otherwise utilised by the rail operator/ state (AS 7638)

rail level theoretical level of the running surface of the rails. In the case of superelevated track it is the low rail

relative compaction the field dry density of soil expressed as a percentage of the maximum dry density of the soil determined in the laboratory either by a standard or modified proctor test

rockfill fill compacted almost exclusively of fragments of broken rock. It generally consists of a large portion of gravel, cobble, and larger sized fragments, and could contain large open voids

shoulder distance the distance from the track centreline to the edge of the formation

soluble soil soil containing perishable particles such as gypsum or rock salt

spoil excess (surplus) material and/ or contaminated material from excavations which is not required to complete the works, or material from excavations whose quality is unacceptable for work

stockpile placement of material that has been selected, loaded, transported and unloaded in a heap outside the confines of a borrow pit or of an excavation that forms part of the works

structural zone the upper zone of the embankment comprising compacted structural fill material below the capping layer

sub-ballast permeable capping which is more appropriate than the impermeable capping under certain circumstances where the foundation consists of free draining materials such as rockfill or sands. Sub ballast limits the fouling of ballast by preventing upward migration of fine material from the subgrade

subgrade the existing ground below the capping layer upon which the track structure is constructed; provides a stable foundation for the capping and ballast layers and comprises imported soil in embankments and an in situ material or imported soil in cuttings

swelling soil see expansive soil

tolerance range between the limits within which a dimension or position lies

top soil a natural surface soil that could contain organic matter

unsuitable material the material that occurs in the borrow site or below the foundation level of embankment and is not considered as suitable due to its adverse characteristics

© State of NSW through Transport for NSW 2018

5. General requirements for earthworks

All earthworks shall comply with the requirements for safety, environment and sustainability, and heritage.

5.1. Safety

The earthwork designs shall take into account, the safety considerations for investigation, construction, operation, maintenance and decommissioning as stated in T MU MD 20001 ST *System Safety Standard for New or Altered Assets*.

All activities and procedures in this standard shall comply with the requirements of the TfNSW safety management system.

5.2. Environment and sustainability

All earthwork activities shall consider environmental impacts and optimise sustainability opportunities during investigation, design, construction and operational activities. These activities should conform to contemporary good practice in environmental and sustainability consideration and implementation.

The design shall consider sustainability over the life cycle of the asset. Considerations include the following:

- embodied energy in construction materials
- protection or enhancement of biodiversity
- stormwater management
- noise and vibration
- traffic impacts
- visual impact and amenity
- resilience to climate change
- ability and ease to maintain and 'retro-fit' improvements over time
- disposal and re-use at life cycle end
- air quality, especially dust

© State of NSW through Transport for NSW 2018

5.3. Heritage

The design, planning and construction of geotechnical works, including excavation works shall take into account any heritage issues that are applicable. Where features like embankments and cuttings need to be modified or wherever new works are proposed within the vicinity of identified heritage items, heritage issues can arise and shall be appropriately addressed.

TfNSW is responsible for maintaining and appropriately managing items of heritage significance under its stewardship and control. The significance of heritage items may be historical, aesthetic, scientific, social or spiritual, and is often a combination of a number of these values. Heritage items are also valued for their rarity or as being particularly representative of their type.

Heritage management is governed by legislation in New South Wales (NSW). The *Environmental Planning and Assessment Act 1979* (NSW) requires that environmental impacts including impacts on heritage items, resulting from development shall be appropriately assessed.

The *Heritage Act 1977* (NSW) is designed to protect, maintain and manage environmental heritage in NSW, including items of archaeological significance. *The Heritage Act* contains provisions for the physical protection of all known and undiscovered archaeological relics, which are not the subject of a heritage listing. Relics relate to past industrial, agricultural or domestic activities, examples of which include building materials, machinery, pottery, or general refuse.

Historic utilities and infrastructure are not considered to be relics, but regarded as ‘works’, and these are required to be managed with appropriate recognition of their heritage significance.

Approvals shall be obtained under the *Heritage Act* (NSW), if it is anticipated that relics are discovered, exposed, moved, damaged or destroyed during any proposed earthworks activity. The relevant transport agency environmental staff shall be immediately notified if the presence of archaeological material is suspected.

The *State Agency Heritage Guide - Management of Heritage Assets by NSW Government Agencies* sets out the principles and guidelines for managing State-owned heritage assets. These principles and guidelines aim to provide clarification to NSW Government agencies about heritage issues and opportunities.

The *National Parks and Wildlife Act 1974* (NSW) is the principal legislation for the protection of Aboriginal cultural heritage in NSW. If there is an indication of the presence of Aboriginal cultural heritage items of significance near proposed earthworks, then further investigation is required and notification shall be made to the relevant transport agency environmental staff and to the Heritage Division of the Office of Environment and Heritage.

© State of NSW through Transport for NSW 2018

6. Design requirements

Earthworks and formation design includes the following:

- cuttings
- embankments
- capping layer

New rail lines shall be constructed on a corridor wide enough to accommodate earthworks and formation designed and constructed in accordance with the requirements in this standard.

The rail corridor shall accommodate associated drainage, access roads and combined services routes as detailed in T HR CI 12130 ST *Track Drainage,* T HR CI 12200 ST *Access Roads* and T HR CI 12190 ST *Service Installation within the Rail Corridor*.

6.1. Design and investigation

Before any earthwork activity is started, all necessary assessment and investigation shall be done to determine the nature of the existing ground, elements and extent of the work.

Such investigation shall also include an assessment as to whether the proposed earthworks are likely to result in any archaeological relics being discovered, exposed, moved, damaged or destroyed.

The design of any earthworks shall ensure adequate stability, resistance, stiffness, maintainability and durability throughout its intended design life.

The factors outlined in Section 6.1.1 through to Section 6.1.30 shall be taken into consideration in the preliminary assessment, planning, designing and construction of earthworks.

6.1.1. Site investigation

A site investigation shall be done to provide input into the design, construction and maintenance of the proposed earthworks. Unless specified otherwise as a minimum, geotechnical site investigation shall be done in accordance with AS 1726 *Geotechnical site investigations*. Project specific site investigation plan and requirements should be developed based on the scope of work, complexity of existing ground conditions, and serviceability requirements. A desktop study should be carried out prior to site investigation to gather available geotechnical information and obtain details of utilities relevant to the proposed work.

The site investigation includes the following:

- test pits
- bore holes
- geophysical investigations

© State of NSW through Transport for NSW 2018

- test rolling
- field and laboratory tests
- geological mapping

6.1.2. Adjoining property and infrastructure

Considerations shall be given to the following:

- assessment of adjoining property and infrastructure to determine whether there is a potential for damage due to excavation, earthfill, compaction, vibration, noise, run-off, dust or other effects of the earthworks
- liaison with the adjoining owners and obtain the required approvals from the relevant authorities

6.1.3. Preservation items

Surveys are necessary to identify rare flora and fauna, and heritage items that may require preservation, archival recording or relocation. Surveys shall be done in accordance with environmental and heritage regulations and standards. Refer to Section 5.2 and Section 0 for more information.

6.1.4. Rehabilitation

Rehabilitation of areas that are affected by different construction activities such as borrow areas, stockpiles, excavated or fill batters, spoil disposal areas, haul routes, stormwater control, camps, offices and workshop sites, should be included in drawings and specifications. Materials such as topsoil, mulched native vegetation and bulk fill materials used for rehabilitation should be identified and preserved for re-use. Mulched native vegetation can contain useful seed stock and nutrients.

Rehabilitation works shall be completed before the constructor vacates the site.

6.1.5. Relevant historical events

Earthworks design shall consider relevant historical geotechnical events at or within the proximity of the site. This includes previous failure modes, mining activities and ground subsidence that can have an effect on earthworks.

© State of NSW through Transport for NSW 2018

6.1.6. Drainage including existing ground water and surface water regime

Temporary and permanent diversion of permanent or ephemeral watercourses prior to or during construction of the earthworks and associated works can affect the quantity or quality, or both, of the stormwater run-off. Special provisions are necessary to minimise the effects and to protect the legal rights of adjacent and downstream landowners. Approval from the relevant authorities shall be obtained prior to, either the placement of fill on flood-prone lands or construction of drainage structures such as culverts in natural watercourses. The placement of fill or construction of cuts can affect the flow of subsurface water and lead to localised instability. Special provisions are necessary to account for the potential effect of the works in such cases.

Refer to T HR CI 12130 ST and T HR CI 12130 MA *Track Drainage* for design considerations.

6.1.7. Erosion and siltation

Protection of the earthworks from erosion, during construction and operation, should be taken into account. Run-off from the works, and areas affected by the works, are subject to special provisions. Siltation by eroded materials in downstream structures requires special consideration.

Erosion and sediment control shall be implemented in accordance with Landcom's *Managing Urban Stormwater: Soils and Construction*.

6.1.8. Sloping ground

Special precautions are required where the earthworks are designed and constructed on sloping ground. These precautions include the following:

- benching of the surface of the natural ground to assist in the placing of the fill and to key the fill to the foundation soil
- berms or benches above, within, or at the foot of cuts to intercept stormwater run-off or detritus or other
- subsoil drainage to lower the ground water level
- stabilising existing failure planes prior to construction

6.1.9. Existing filled ground

Existing filled ground, for which the conditions of the placement are not adequately documented, shall not be assumed to be either of the standard compaction or of the composition adequate to support fill or any other loads. In many cases, un-engineered fill or domestic refuse may be present. These are considered unsuitable to support fill or other loads.

Adequate testing is necessary to confirm the existing fill conditions.

© State of NSW through Transport for NSW 2018

6.1.10. Design loads

Current and likely future loading patterns such as traffic type, axle load, speed, rail geometry, (for example, track lifting, realignment, laying additional tracks) water pressures and surcharge loading shall be considered.

Earthworks subjected to train loading shall be designed for railway loading detailed in AS 5100.2. *Bridge Design Part 2: Design loads*.

6.1.11. Earthquake loading factors

Earthquake loading factors shall be used to assess the potential impact of earthquakes on proposed design according to AS 1170.4 *Structural design actions Part 4: Earthquake actions in Australia*.

6.1.12. Potential for liquefaction

The potential for liquefaction or other undesirable consequences of earthquakes shall be considered.

6.1.13. Topography and local geology

Bedrock topography, geological features such as pre-existing failure planes, bedding planes, faults and joints, and weathering patterns shall be considered.

6.1.14. Presence of soft or compressible soils in foundation

Soft or compressible soils do not form a good foundation on which fills can be placed and compacted. This may need to be excavated or treated.

In such cases, a suitable ground improvement technique shall be considered. Ground improvement methods include using preload surcharges, vertical drains to accelerate consolidation, stone columns, deep mixing to strengthen the foundation, soil replacement and dynamic compaction. Vertical drains include sand drains or prefabricated drains.

Geosynthetics may be used to reinforce the immediate fill above the soft soil.

Long-term settlement effects such as cumulative and differential settlement shall be assessed.

To avoid excessive displacement of soft or compressible soils during construction, movement of heavy construction equipment over such materials should be restricted. When calculating material quantities, the compression of soft fill or foundation soils should be considered.

© State of NSW through Transport for NSW 2018

6.1.15. Slope stability

Both short-term and long-term stability shall be assessed for natural slopes, cut slopes and embankments.

The assessment shall be based on the following:

- geotechnical investigation and stability analysis
- local experience with similar materials under similar conditions

Each stability assessment should take into account any existing slopes, foundation material and surcharge of the slopes, dynamic loads such as induced vibrations, earthquake and the effect of water seepage on the slopes. Each slope should be selected with regard to the required access, including maintenance.

For embankments in flood prone areas, the stability analysis should consider steady state seepage and sudden drawdown situations where applicable. Refer to Section 6.2 for design flood level.

6.1.16. Settlement

Settlement behaviour shall be assessed for new embankments and the repair of existing embankments that carry railway traffic.

Total settlement may comprise the following:

- settlement of subsoil or foundation under embankment fill
- settlement of embankment due to its dead load
- settlement due to traffic load

Settlement predictions should demonstrate that any settlement that occurs after opening for traffic is able to be rectified by routine track maintenance during the design life. The maintenance interventions should be included in the embankment design where required.

In case of excessive settlements, for example, embankments over soft soil deposits, alternative designs should be considered to bring the cumulative settlement down to tolerable limits. Alternative designs may include ground improvement techniques as provided in Section 6.1.14.

Refer to Section 10.2 for embankment design.

6.1.17. Surcharging of slopes

Cut face and fill slopes, sides of trenches and slopes supported by retaining walls shall not be loaded by construction equipment, materials, soil and the like, unless the assessment of the slope stability includes an allowance for the particular loads.

© State of NSW through Transport for NSW 2018

6.1.18. Trenches

Excavations for trenches require special consideration for support. Relevant authorities place limitations on the maximum depth to which trenches may be excavated without shoring. During trenching, safety regulations shall be considered.

Loose or soft layers, and water flow and seepage shall be considered during trenching.

The effect of trench excavation on the stability of any adjacent embankment, cutting, formation, track or other structure shall also be considered.

Unsupported trenches should not be left open overnight.

Refer to T HR CI 12190 ST *Service Installations within the Rail Corridor,* AS 4799 *Installation of underground utility services and pipelines within railway boundaries* and T HR CI 12130 ST for details on trenching for service installation within the rail corridor.

6.1.19. Retaining structures

The compaction of fill against retaining walls may induce higher pressures than adopted in the design. The nature of the fill to be used, the specified level of compaction, and the type of compaction equipment to be used, shall be assessed in selecting design loads on retaining walls.

6.1.20. Durability

The durability of the construction materials shall be assessed to determine any special requirements to protect or provide resistance to structure or elements in the structure. Bushfires and lineside fires may affect performance of geosynthetics causing premature failure. Buried metallic components such as ground anchors and soil nails can have a long-term durability effects due to stray currents in electrified lines.

6.1.21. Buried services

Buried services within the proposed work area shall be identified before starting any work. The services may include signalling, communication cables, trackside monitoring equipment, and external services such as power, gas, communications, water and sewer. The design shall take into account any potential detrimental effects resulting from damages or dysfunctional services on the stability of the earthworks.

© State of NSW through Transport for NSW 2018

6.1.22. Physical separation of dissimilar materials

Filters comprising materials of selected particle size distribution and geosynthetics may be used to avoid the mixing of materials after placement. These filters are used to avoid the following:

- soft materials being forced into voids of granular material
- erosion and migration of fine particles into adjacent granular material

6.1.23. Geosynthetics

Proprietary products are available with particular properties suitable to act as a filter, drainage layer or physical separator to allow water flow while avoiding migration of soil particles or as a tensile reinforcement element. Such materials may be construction expedients, or may form part of the permanent earthworks. Geosynthetics should be carefully chosen for the intended purpose in accordance with T HR CI 12111 SP *Earthwork Materials* and have an adequate service life and be designed with necessary protection against premature failure under the intended conditions.

Refer to Section 6.1.20 for durability of construction materials.

6.1.24. Problematic soils

Soils requiring special consideration include reactive or expansive soils known as volumetric unstable soils, dispersive soils, collapsible soils, soluble soils, soft-compressible soils, and potential acid sulfate soils.

Adequate suitability tests shall be carried out for such soils to assess the nature and potential effects on earthworks. Tests shall be in accordance with AS 1289 *Methods for testing soils for engineering purposes*.

Fill material shall comply with T HR CI 12111 SP.

Expansive soils

Materials containing highly expansive clays are considered unsuitable for fills. The properties of such materials can be improved to suit embankment fill by blending with appropriate additives. Additional tests are required to identify expansive soils and to determine improved material characteristics after blending.

Low density or potentially collapsing soils

Low density or potentially collapsing soils such as loess lose their volume when saturated or compacted in or beneath earthworks. When calculating quantities, compression of the fill or foundation of such material should be taken into account.

© State of NSW through Transport for NSW 2018

Potential acid sulfate soils

In certain areas, particularly in coastal marine deposit areas, the presence of considerable amounts of iron sulfates is possible. Disturbing or exposing these soils to air may cause formation of sulfuric acid. Excavation and movement of such soils are subject to strict environmental controls that normally include chemical treatment to avoid contamination of streams and drains. The relevant environmental authority shall be consulted before excavating, handling or using such soils.

6.1.25. Compaction moisture content

The optimum moisture content determined by laboratory methods in accordance with AS 1289 is used for construction control to achieve desired engineering behaviour of the embankment fill. After assessing the suitability of each source material, the maximum dry density and the optimum moisture content shall be determined before starting construction.

The optimum moisture content for compaction under field conditions depends on the material type, equipment used, layer thickness, climate conditions and nature of the foundation. In general, the heavier the compaction effort or the thinner the layer, the lower the optimum moisture content will be. The construction specification or laboratory compaction test results indicate the water content associated with the maximum dry density or relative compaction.

6.1.26. Construction activities vibrations

Consideration shall be given to construction activities, particularly those using equipment such as compactors or blasting, that can cause vibrations and damage to nearby structures, either directly from extra stresses transmitted to the structure by the vibration, or indirectly, by causing settlement of the foundations.

6.1.27. Contamination

Any known or suspected ground or groundwater contamination shall be investigated. Relevant authorities have set limits on the quantity of contaminants permitted in ground in various applications. Removing contaminated soil from the site, importing contaminated soil or keeping it on site requires approval from the relevant authorities. The effects of any investigation on planned earthworks, including safety and environmental aspects, shall be considered.

6.1.28. Calculation of quantities

In calculating quantities of fill, the following shall be taken into account:

- volume changes due to excavation, spreading and compaction
- compression of the foundation soil

© State of NSW through Transport for NSW 2018

The degree of volume change is dependent on the type and texture of the material and the required relative compaction. Volume change may be assessed as part of the site investigation using field density and laboratory compaction tests.

6.1.29. Non-potable water to be used for soil compaction

The suitability of non-potable water for increasing the moisture content of fill shall be evaluated by field and laboratory tests. Saline waters shall not be used in the following cases:

- areas where vegetation can be established
- fill where steel or reinforced concrete structures are buried

6.1.30. Monitoring

In certain situations such as construction near sensitive structures or construction over soft soil deposits, monitoring is required during and after construction to ensure that no adverse effects are present to nearby structures and the stability of the construction site. The monitoring may be in the form of survey pegs, settlements plates, piezometers, inclinometers and vibration monitors.

Results from monitoring shall indicate the following:

- confirmation of design assumptions
- checking of the predicted behaviour and thereby helping design verification
- confirmation that the structure performs in accordance with the design requirement
- no adverse effects to nearby structures

6.2. Design flood level

Where track is on a flood plain, the formation level shall be designed so that it is not overtopped in a 1 in 100 year flood.

The impact from potential flooding on other structures and earthworks shall be assessed.

The environmental impacts shall comply with the legislative requirements.

© State of NSW through Transport for NSW 2018

6.3. Track formation

Track formation is the earthworks structure including all foundation, structural treatment and capping layer on which ballast is laid.

Figure 1 illustrates the track formation basic design model.

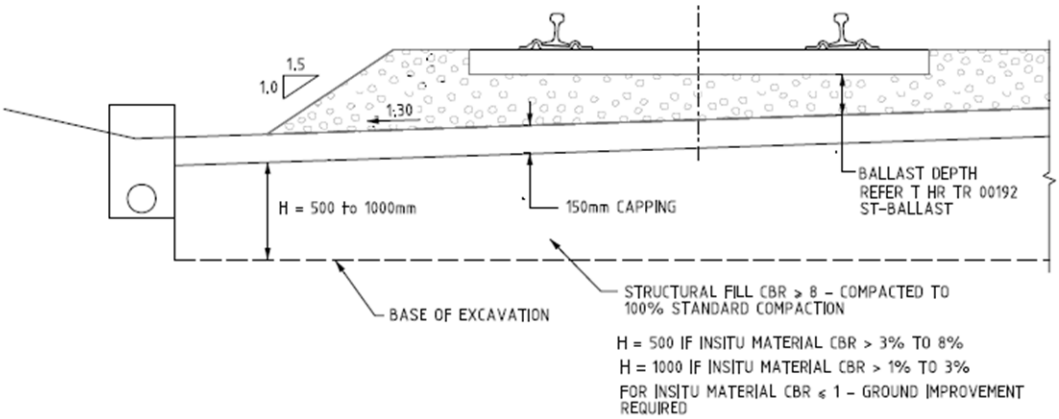

Figure 1 – Track formation basic design model

6.3.1. Formation design

The formation design shall take into account the appropriate factors given in Section 6.1 that are applicable to each section of the track.

The formation for single track mainlines and single-track sidings shall comply with the appropriate dimensions shown in Figure 3, Figure 4, and Figure 5 in Appendix A.

The formation for double track mainlines and double track sidings shall comply with the appropriate dimensions shown in Figure 6, Figure 7, Figure 8 and Figure 9 in Appendix B.

The formation for multiple track mainlines and multiple track sidings shall comply with the appropriate dimensions shown in Figure 6, Figure 7, Figure 8 and Figure 9 in Appendix B.

The track drainage design shall comply with T HR CI 12130 ST.

Shoulder distances shall comply with those given in Table 1 and Table 2.

Track centres shall be in accordance with ESC 215 *Transit Space*.

Table 1 - Plain track shoulder distances

Area	distance (mm)
Main line (electrified or non-electrified)	4300
Siding (electrified)	4300
Siding (non-electrified)	3000
Main line or siding with parallel access road (electrified)	6200
Main line or siding with parallel access road (non-electrified)	5500

© State of NSW through Transport for NSW 2018

Table 2 – Shoulder distances for special requirement areas

Area	distance (mm)
Shunters and guards parallel walkways	4300
Train examination areas	5500
Train examination areas with parallel access road	7750
Clear width of road from back of any structure	3000

6.4. Train examination areas and walkways

Where nominated, train examination areas shall be provided. The minimum requirement is that these areas shall be covered with a 50 mm layer of 10 mm single sized aggregate as shown in Figure 5 in Appendix A and Figure 9 Appendix B.

The train examination area shall not be assumed as available for road access purposes.

Where nominated, walkways shall be provided for staff to walk along the track cess. The minimum requirement is that these walkways shall be covered with a 50 mm layer of 10 mm single sized aggregate as shown in Figure 5 in Appendix A and Figure 9 in Appendix B.

Table 2 indicates the required shoulder distances for train examination areas and walkways.

7. Documentation

Documentation is an important element in all earthworks projects.

All activities of earthworks shall be documented. Appropriate documents shall be prepared in the following stages:

- investigation and planning
- design and specification
- construction
- site record
- handover

7.1. Investigation and planning documentation

Investigations for planning of earthworks for use by the designer, the constructor and other interested parties should include the following:

- outline of the need for and objectives of the project
- site investigation of the project and any associate sites including the following:
    - foundation and subgrade materials

© State of NSW through Transport for NSW 2018

  - in situ and laboratory test results
  - special areas due to presence of groundwater, seepage, rock, problematic soils
  - available fill materials and, where applicable, details of the overburden
  - suitability of the fill materials for the intended purposes
  - additional tests to identify problematic soils and contaminated soils
  - classification of materials to be removed off site
  - suitability of water for placement of the fill
- where applicable, an outline of other options that have been considered in the investigation
- the quality assurance requirements for the project

7.2. Design and specification documentation

The functional requirements of the design shall be documented in the specification and drawings for the earthworks project. The documentation shall provide the detail necessary for the works superintendent to interpret the design and administer the contract. For example, the documentation should specify the geotechnical inspections and relevant testing.

Design and specification documentation shall include the following as appropriate:

- adequate specification and drawings to allow the proper planning, execution and supervision of the works

  Plans, sections and elevations shall clearly show areas of earthworks, identifying areas, which require specific treatments. On larger projects, the specification and drawings shall adequately define the following:

  - the areas in which spoil may be dumped or stockpiled
  - restrictions on clearing and stripping
  - drainage requirements during and after construction
  - criteria for selecting materials for placement in various parts of the fill and for material to be excluded from fill

    Material descriptions shall be clear, unambiguous and in accordance with AS 1726.
  - criteria for the standard of surface trim of completed earthworks
  - quality assurance criteria including details of tests, minimum frequencies of tests and acceptance criteria
  - the scope of the commission to be given to the geotechnical inspection and testing authority
  - hold points during construction

© State of NSW through Transport for NSW 2018

  - either the methods to be used for construction or the requirements to be met and validated through tests of the finished project

    Performance specifications and method specifications should not be mixed. Where a performance specification is adopted, restrictions on methods should be limited to those necessary; for example, to limit the risk of damage to nearby structures.

- site investigation information, together with details of, and provisions for, access to any further relevant information for the purpose of design or construction planning
- during construction and post construction monitoring requirements
- any other relevant information in the possession of the designer that is useful for construction
- maintenance requirements during operational life of the asset
- decommissioning requirements if applicable

7.3. Construction documentation

Records shall be kept during construction, including conditions encountered, works as executed, as built drawings, testing records and any alterations to the specification and drawings.

The records typically include the following:

- the areas in which fill is placed
- levels after stripping and materials exposed after stripping
- materials exposed after stripping, details of test rolling, if done
- types of fill material in various zones
- sources of fill material in various zones, where applicable
- regular levels along the track chainage for finished structural zone and finished capping
- location and level of each compliance test, together with test results; where a test is a retest of a lot that was previously rejected, this should be stated
- areas of cutting faces that requires stabilisation measures, and areas already stabilised; for example; rock bolts, shotcreting, or rock netting
- rock bolt information including bar size and locations
- monitoring records

© State of NSW through Transport for NSW 2018

7.4. Site records documentation

Daily diaries and detailed drawings of works as executed should be maintained by site staff. Typical site records include the following:

- a daily geotechnical report is generally appropriate for larger projects

  This may include geotechnical monitoring reports.

- a geotechnical site visit record
- an earthworks summary report, which is appropriate for small projects

Appendix D provides a blank sample daily earthworks report, and Appendix E provides a blank sample earthworks summary report.

7.5. Handover documentation

Project documentation should comprise handover documentation that includes the following:

- geotechnical investigation reports
- work as executed drawings
- quality assurance records including the following:
  - test certificates
  - acceptance certificates
  - monitoring reports
  - nonconformance reports and concessions
  - signed inspection records
  - site records
- instrumentation details, monitoring records and monitoring requirements if applicable
- maintenance requirements including any tests during the design life
- any other documentation as specified in the contract

8. Preparation for earthworks

Before starting earthworks, the following shall be considered and addressed as appropriate:

- proposed work methods taking into account the physical conditions and limitations of the site
- specific measures to avoid undermining of any adjacent track, formation, embankment, cutting or other infrastructure

© State of NSW through Transport for NSW 2018

- environmental impacts during and after the construction including sediment management
- management of underground services; the services that are located within the construction zone may require relocation so as not to adversely affect the performance of the completed earthworks
- management of live rail operations including work, health and safety (WHS) and rail safe working requirements
- management of dewatering operations, temporary drainage and site runoff
- locating haul routes away from the proposed track centreline unless mitigation measures are in place to prepare formation layers
- potential effects on adjacent infrastructure such as roads and drains
- management of emergency situations

All excavations and construction works shall comply with the relevant regulatory requirements and TfNSW safety management requirements.

8.1. Earthworks plan

The earthworks plan shall be prepared and address all requirements and constraints imposed by the specifications, the physical conditions at the site and the proposed work method.

The earthworks plan typically includes details of the following:

- excavation sequence and proposals for the management of all materials in the earthworks including the use of topsoil, procurement and control of imported materials, materials from borrow sites, and spoil
- preliminary identification of zones of potentially unsuitable materials, and management of disposal and replacement of unsuitable materials
- methods to be employed to ensure that materials of the specified or higher quality are identified, made available and incorporated into the work at the sites where the quality of the material has been specified

  The details include any sorting, isolating, processing, and placement of the materials proposed for such use. Processing may include screening, crushing, blending, and modification of the material.
- sources of materials and testing proposed for structural treatment
- procedures proposed for procuring and managing materials from borrow sites where applicable
- procedures proposed for the treatment of foundations

© State of NSW through Transport for NSW 2018

- procedures and mass haul diagram proposed for the management of excavation and the placement of earth and rock fill embankments, and rock facing, to ensure that no deficiency of earth fill occurs and conformity requirements are met
- any monitoring requirement during and after construction
- methods to demonstrate that the specified compaction has been achieved including compaction moisture control over the full depth and width of each layer and that specified layer thickness is not exceeded

8.2. Setting out of earthworks

The position and extent of all cuttings and embankments shown on the construction drawings including transitions from cuttings to embankments shall be marked, using pegs and batter profiles or equivalent, before starting construction. Setting out shall take into account any formation widening necessary to accommodate the design requirements.

8.3. Site clearing

Permits required by state and local legislation shall be obtained prior to clearing and grubbing.

Clearing includes removal and disposal of all trees, stumps, logs, timber, scrub, vegetation, minor structures, refuses and other material unsuitable for incorporation in the work. Refer to Section 8.3.2 for unsuitable materials.

Unless stated in project specifications, grubbing shall be carried out to a minimum level of 0.3 m below natural surface.

Holes left after grubbing under proposed embankments shall be filled with approved material as directed by the geotechnical engineer and compacted in layers as for embankments.

8.3.1. Removal of topsoil and unsuitable material

Most naturally occurring soils, with the exceptions specified in Section 8.3.2, are capable of being compacted to form a general fill.

Topsoil shall be removed over the area, which is occupied by the completed works along with an additional clearance of 2 m. Topsoil suitable for vegetation propagation may be placed in a stockpile clear of the work to enable its re-use in landscaping and revegetation.

© State of NSW through Transport for NSW 2018

8.3.2. Unsuitable materials

Some materials are unsuitable for forming embankment fill and foundation of railway formation and shall be either removed to spoil or used in non-critical areas.

Unsuitable materials include the following:

- topsoil, organic soils, such as severely root-affected subsoils, peat, logs, stumps; topsoils containing organic materials may be used for landscaping purposes, if necessary
- free draining material susceptible to scouring or piping such as very fine clean sand, windblown sand and non-cohesive silt
- organic silt and clay with California Bearing Ratio less than one (CBR<1)
- expansive or swelling soils which undergo large volume changes due to change in moisture content

  These materials shall either be removed as spoil or treated by additives as directed by the geotechnical engineer.
- dispersive soils, which are easily suspended in standing water or eroded by running water
- materials that contain substances which can be dissolved or leached in the presence of moisture such as gypsum and sodium chloride
- contaminated materials containing toxic substances which can be harmful to environment, water supply or agriculture
- collapsible soils in foundation are also considered as unsuitable material and shall either be removed or treated as directed by the geotechnical engineer
- fill that contains wood, metal, plastic, boulder or other deleterious materials, in sufficient proportions to affect the required performance of the fill
- saline, chemically aggressive or polluted soils, and carbonate soils where acid disposal can occur

Where unsuitable material exists in excessive depths, advice of the geotechnical engineer shall be sought. All materials unsuitable for incorporation in the work shall be disposed off-site, unless approved for re-use on site such as noise barriers.

Contaminated or potentially contaminated materials should be tested prior to transportation off site and disposed of in accordance with relevant legislation.

© State of NSW through Transport for NSW 2018

8.4. Spoil

Spoil shall not be disposed of by end dumping the material down the embankment slope.

Except for contaminated materials or unsuitable materials, spoil generated from the work shall be disposed of in the manner and at locations shown on the construction drawings or specified by the geotechnical engineer.

If used for existing embankment widening or batter flattening work which is deemed to form part of the embankment construction it shall be done in accordance with Section 12. Effective drainage shall be maintained for the whole embankment.

Stockpile locations shall be selected such that additional loading does not create adverse effects to existing slopes and infrastructure.

If the proposed stockpile locations are outside the work site, all necessary written approvals, including environmental approvals shall be obtained. This may require segregation by material type, classification and, where required, disposal at facilities appropriately licensed to receive the particular materials.

8.5. Borrow material

Any permits required by the federal, state and local legislation shall be obtained before commencing excavation at a borrow pit site, with the conditions of the permit followed at all times.

Where the borrow pit is located within the rail corridor, the borrowing activities shall not be detrimental to the stability or performance of the earthworks or adjacent structures.

The quality of the borrow material shall satisfy all necessary technical requirements in accordance with T HR CI 12111 SP.

8.6. Drainage and erosion control during construction

During the construction period, measures should be taken to prevent excessive waterlogging of surface materials yet to be excavated or compacted or both, and to prevent fill material from being eroded and redeposited at lower levels. Refer to Section 6.1.7 for erosion and siltation.

All earthwork areas should be re-topsoiled and grassed or hydro-seeded as soon as possible after completion of the earthworks and drainage works.

Erosion and sediment control shall be implemented in accordance with Landcom's *Managing Urban Stormwater: Soils and Construction*.

© State of NSW through Transport for NSW 2018

9. Cuttings

The design of cuttings shall provide for excavation of material within the limits of the batters including benching and terracing of cut batters, cleaning of batter surfaces, and treatment of cutting floors.

Cuttings in both soil and rock shall provide a stable batter slope, safe foundation for the track and associated structures. The design shall include drainage and cutting floor stabilisation as appropriate.

The design of cuttings shall consider a buffer zone at the toe of cuttings to accommodate fallen soil or rock.

The appropriate factors given in Section 6.1 shall be taken into consideration when designing cut slopes.

Benching in cuttings should be provided in both soil and rock as necessary. Refer to Section 9.2 for benching requirements.

9.1. Batter slopes

The gradient of a batter slope in soil and rock cuttings shall be determined by the geotechnical engineer.

The design of a batter slope shall include the following:

- slope stability
- material properties
- height
- drainage
- discontinuities
- static and dynamic loading
- potential seepage forces
- earthquake loading
- pre-existing failure planes
- long-term deformations
- weathering of exposed rock
- impact of vegetation
- access and maintenance requirements

© State of NSW through Transport for NSW 2018

Any structure at the top of a cutting such as buildings, power poles, or retaining structures shall be taken into account for cutting stability as they apply external loads to the slope.

The design may include external stabilisation such as soil nailing, rock bolting, shotcreting, and rock netting.

Special drainage arrangements and safety access requirements, where applicable, shall be incorporated in the batter slope design.

Table 3 provides typical indicative batter slopes in soil and rock cuttings.

Table 3 – Horizontal and vertical dimensions for batter slope

No	Material	Horizontal	Vertical
1	Sand	2.5	1.0
2	Clay, loose gravel	2.0	1.0
3	Sandy clay, boulder clay, compacted gravely soil, talus	1.75	1.0
4	Highly jointed, weathered weak rock	1.5	1.0
5*	Well jointed or bedded high strength to moderate strength rock	1.0	1.0
6*	Massive intact rock without unfavourable dip or cleavage	0.25	1.0

** The maximum height without a bench is 7 m.*

Batter slopes shall be confirmed by the geotechnical engineer.

Slopes shown on the construction drawings generally represent the estimated requirements for the expected types of material and shall be subject to re-determination on the basis of site inspections and investigations during excavation.

Finished batters shall not have a slope steeper than that specified in the construction drawings.

If the batter is over-excavated beyond the tolerance applicable for the batter slope line, or if after cleaning, the batter is beyond the tolerance applicable, the batter shall be restored to the specified slope angle and stability in accordance with the advice of the geotechnical engineer. Proposals for restoration shall include long-term stability, durability, and consider urban design solutions.

© State of NSW through Transport for NSW 2018

The tolerances for the excavation of batters shall comply with the values provided in Table 4.

Table 4 – Tolerances for the excavation of batter

Location	Tolerance (mm) slope 1H:1V or flatter	Tolerance (mm) steeper than 1H:1V
At toe of batter	+ 0/- 150	+ 0/- 200
2 m above toe of batter and higher	+ 300/-300	+ 300/- 600
Between level of toe of batter and 2 m above toe of batter	pro rata basis	pro rata basis

Note: Plus (+) is towards the track and minus (-) is away from the track. Tolerances are measured perpendicular to the plane of the slope.

Undulations in the general plane of the batter shall not be permitted. The completed batter shall be free of rills running down the face of the batter.

9.2. Benching

Cut batters shall be benched to provide drainage and erosion control, to provide geotechnical stability and to allow maintenance access. A suitable bench width shall be selected to satisfy the requirements. A typical bench width in a soil cutting is 4 m. Benches shall be maintained and cleared of loose earth, stones, and boulders throughout the works.

For rock cuttings of batter slope equal or steeper than 1H:1V, the maximum height without a bench shall be 7 m. For soil and highly weathered rock cuttings, the maximum height without bench shall be 10 m. Safety barriers and hand railing may be installed as required for safe access for maintenance activities.

The floor of the bench shall not vary from levels shown on the construction drawings by more than +0 mm / -100 mm.

The bench shall have a crossfall to drain water away from the cut face immediately below the bench.

Longitudinal drainage shall be provided and maintained.

Bench drains shall be constructed progressively as each batter face is completed.

9.3. Excavation

Excavation shall be done in such a manner to prevent erosion or slip; working faces shall be limited to safe height and slopes, and surfaces shall be drained to avoid ponding and erosion.

Undercutting of slopes shall not be permitted under any circumstances.

Batters generally require flattening at the ends of cuttings owing to the presence of less stable material. In all cuttings, undulations in the general plane of the batter shall not be permitted.

© State of NSW through Transport for NSW 2018

Overhanging and loose or unstable materials likely to slip shall be cut back, removed or stabilised.

Rock cuttings and exposed surfaces shall be excavated to obtain smooth, uniformly trimmed surfaces.

Excavation shall be done in accordance with any applicable excavation permit issued by the Heritage Council of New South Wales.

9.3.1. Blasting

For any blasting operation, all necessary licences from the appropriate authorities shall be obtained.

All procedures for blasting shall comply with all government regulations relating to planning, documentation, transport, storage, handling and the use of explosives.

Blasting is also required to comply with the requirements of all external agencies including, but not limited to, the Office of Environment and Heritage (OEH) and the Work Cover Authority and demonstrate compliance with Roads and Maritime Services (RMS) QA Specification R44 *Earthworks*.

Blasting activities shall comply with AS 2187 *Explosives – storage, transport and use* and all other relevant standards and codes for the use of explosives in construction.

Any vibration, air blast and fly rock management plan shall contain a review and verification of the requirements set by appropriate authorities to ensure that the public, building structures and infrastructure are protected.

Detailed inspections and dilapidation surveys should be carried out on railway infrastructure, including track geometry and adjacent third party assets before starting and after the completion of blasting activity.

All blasts shall be monitored for ground vibration and air blast and fly rock to ensure that the blasting methods, peak particle velocity and air blast do not cause damage to property as indicated in Table 5.

© State of NSW through Transport for NSW 2018

Table 5 – Blasting overpressure and peak particle velocity limits

Point of potential damage (within 1 km from the proposed blast site)	Blast overpressure level [dB(linear)]	Peak particle velocity
Completed and cured bridge structures or sub-structures. For example, completed abutment.	115 dB	10 mm/s
Bridgeworks and structural retaining walls under construction	115 dB	10 mm/s
Residential premises, schools, hospitals and other buildings	115 dB (5% not to exceed 120 dB)	5 mm/s (not to exceed 10 mm/s)
Buildings or monument of historical significance	115 dB	2 mm/s

The AEO responsible for the blasting shall implement and maintain a community liaison program during blasting activities to keep people near the work area informed of any activities.

During blasting operations, precautions shall be taken relating to the safety of persons and animals. Any road likely to be affected by the blast shall be closed to traffic and the appropriate signs erected.

9.3.2. Pre-splitting and line drilling

Pre-splitting or line drilling should be used to ensure protection of batters before burden blasts to produce a uniform and neat batter surface after excavation.

Typical centre-to-centre spacing of drill holes for pre-splitting or line drilling is given in Table 6.

Table 6 – Drill hole spacing for pre-splitting or line drilling

Cut batter treatment	Hole diameter (mm)	Maximum hole spacing (mm)
Pre-splitting	38 to 51	450
Pre-splitting	51 to 64	750
Pre-splitting	76 to 89	900
Line drilling	Up to 51	150
Line drilling	51 to 76	250

Detailed records should be kept of all excavation involving the use of explosive substances.

9.4. Cutting floors

Section 9.4.1 and Section 9.4.2 contain requirements for the excavation and compaction of cutting floors.

© State of NSW through Transport for NSW 2018

9.4.1. Excavation of cutting floors

Excavation at the base of cutting shall be finished at a level to suit the capping thickness, with cross falls and cess drains provided. The tolerances for design floor levels are specified in Section 14.1.2.

Cutting floor design shall consider differential settlement resulting from different subgrade stiffness along the length and potential subgrade attrition from mud pumping.

To achieve homogeneous subgrade, design should consider reworking of cutting floor by ripping or loosening to a specified depth below designed floor level and recompacting. This is applicable in situations where abrupt changes of subgrade stiffness occur along the length. Typical depth may vary from 200 mm to 300 mm depending of the type of subgrade material.

The loosened material shall be compacted to a dense layer as specified in Section 9.4.2. The maximum dimension of any particles in the ripped or loosened zone shall not exceed 150 mm.

Unless shown otherwise on the construction drawings the floors shall be trimmed to a level of not more than 50 mm below the design floor level.

9.4.2. Compaction of cutting floors

Compaction of the top layer in the base of cuttings or of material required to fill over excavation shall achieve a minimum of 95% of maximum dry density (modified) as determined in AS 1289.5.2.1 or shall be solid rock.

The compacted material shall have a soaked CBR of at least 8%. Where required the test rolling of cut floors should be as described in Section 10.4.

9.5. Cut to fill transition

At cut to fill transitions a terrace shall be excavated for the width of the formation to a minimum depth of 600 mm below and parallel to the cutting floor.

Figure 2 illustrates the cut to fill transition.

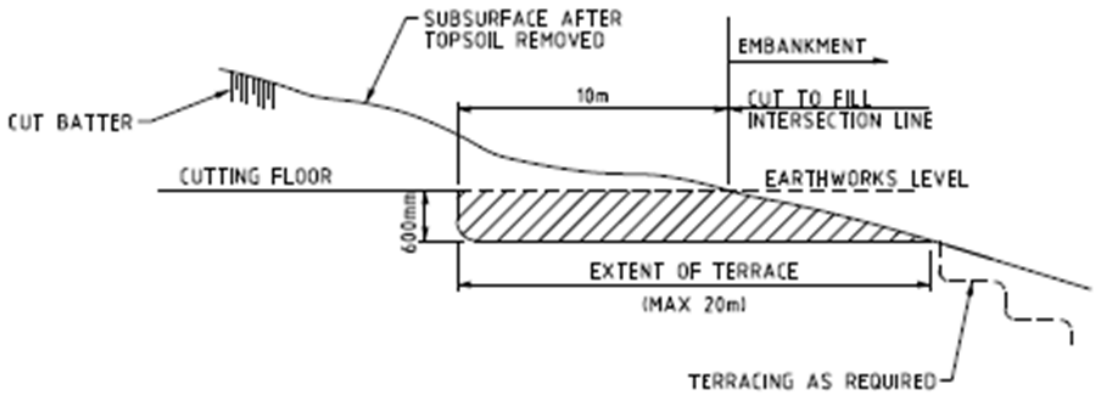

Figure 2 – Cut to fill transition

© State of NSW through Transport for NSW 2018

9.6. Drainage of cuttings

Cutting design shall include appropriate drainage and erosion control to limit soil erosion and rock cutting deterioration. The drainage system may comprise surface drainage including cess drains, catch drains, mitre drains and subsurface drains where applicable. For drainage design refer to T HR CI 12130 ST and T HR CI 12130 MA.

Section 6.1.6, Section 6.1.7 and Section 8.6 describe the considerations for drainage and erosion control during design and construction.

Typical section through cutting is illustrated for single track in Figure 4 and double track in Figure 7.

9.7. Cutting construction tolerances

Refer to Section 14 for tolerance limits.

10. Embankments

Any embankment earthworks shall consider the following:

- in situ conditions
- material
- design
- construction
- test rolling
- profile
- drainage and erosion control

Additional considerations may be required for the design and construction of rock facing embankments and hillside embankments.

10.1. Embankment material

Embankments are earthfill or rockfill structures above an existing or excavated surface to create the rail track formation.

The embankment shall consist of two zones of embankment material:

- general fill
- structural zone

General fill is the embankment fill below the structural zone.

© State of NSW through Transport for NSW 2018

The structural zone is the fill at the top of the embankment.

The minimum thickness of the structural zone (h) 0 is determined by the following relationship with the general fill in the embankment:

- for general fill with CBR of >3% to 8%, h = 500 mm
- for general fill with CBR of >1% to 3%, h = 1000 mm

CBR is measured as soaked CBR, standard compaction.

Material for use in the structural zone shall comply with T HR CI 12111 SP.

Figure 1 illustrates the basic track formation model with the specified requirements.

Unsuitable material as defined in Section 8.3.2 of this standard and in T HR CI 12111 SP shall not be used as general fill with the exception of those made suitable conforming to the material specification in T HR CI 12111 SP.

The properties of some unsuitable materials may be improved by artificially blending with selected materials or by cement or lime stabilisation. Such treated material shall only be allowed for general fill subject to the approval of the geotechnical engineer with supporting laboratory test results.

10.2. Embankment design

The design shall take into account appropriate factors listed in Section 6.1. The structural zone shall be as specified in Section 10.1.

Several factors detailed from Section 6.1 are as follows:

- Resistance to slope failure including base failure under short and long-term design situations, as appropriate, shall be demonstrated based on the in situ ground and fill properties derived from the geotechnical investigation. Refer to Section 6.1.15
- Minimum factor of safety shall be as follows:
    - permanent structures ≥ 1.5
    - temporary structures ≥ 1.3
    - during construction ≥ 1.3
- New embankment batter slope for permanent structures shall not be steeper than 2H:1V, unless otherwise accepted by the geotechnical engineer.
- The vertical height of any single continuous batter slope shall not exceed 10 m. A minimum 4 m wide bench shall be provided at top of any 10 m high single continuous batter slope.

© State of NSW through Transport for NSW 2018

- Where applicable, appropriate water pressure situations shall be taken into account in the stability analysis including the following:
  - seasonal and tidal variations
  - partial submergence conditions
  - steady state seepage and sudden draw down conditions
  - adverse water pressures produced by perched and artesian water tables
  - possible leakage from water mains, sewers and blockage of drainage systems

Settlement predictions of new embankments shall demonstrate that the embankment remains fully functional for the design life and through periodic track maintenance. Any settlements may be adjusted to maintain the serviceability requirements of the track.

The settlement limits are dictated by the track geometry tolerance limits. Refer to ESC 210 *Track Geometry and Stability* for track tolerance limits.

The values in Table 7 may be used as guidance for a typical embankment design.

Project specific settlement requirements shall be established for designs including the following cases:

- construction is over soft compressible deposits
- different serviceability levels are envisaged
- adjacent structures require more restrictive deformation limits

For embankments over soft compressible deposits, greater than 90% of primary consolidation settlement should be achieved prior to laying the track.

Table 7 – Settlement over design life

Description	1st year of operation	3 years of operation	100 years design life
Maximum cumulative settlement	20 mm	30 mm	200 mm
Maximum settlement rate	not specified	10.0 mm/yr	not specified
(a) longitudinal differential settlement *	0.25% (1:400)	0.25% (1:400)	0.25% (1:400)
(b) transverse differential settlement *	0.20% (1:500)	0.20% (1:500)	0.20% (1:500)

*Note: * denotes a maximum limit within a three-year tamping cycle.*

The values in Table 7 apply solely to the top of embankments providing support to the track structure. If the predicted cumulative settlement exceeds the values in Table 7, alternative construction with ground improvement should be considered.

© State of NSW through Transport for NSW 2018

The values in Table 7 are not applicable at turnout locations and bridge approaches; at those locations, more stringent settlement criteria are required.

The values in Table 7 assume that first tamping adjustment will be at the end of three years of operation.

The designer shall provide the tamping intervention requirements, where applicable, based on the settlement predictions.

The embankment design shall ensure that any settlement that occurs after opening for traffic can be rectified by routine track maintenance.

The construction of an embankment shall not lead to reactivation of existing landslides or formation of new landslides, within or outside the corridor.

Scour protection should be provided for embankment slopes that interact with watercourses.

Embankments adjacent to structures and cut sections with abrupt topographic change shall be designed to minimise the differential settlements. This provides smooth transition in the structural stiffness between different structures.

The design drawings and documentation shall include a summary of earthwork construction requirements.

10.3. Embankment construction

Before placing any embankment material, the base for any embankment shall be prepared.

10.3.1. Preparation of embankment base

Preparation of an embankment base includes clearing, grubbing, removal of topsoil and removal of unsuitable material and subsequent restoration as described in Section 8.3. It also includes cutting of terraces into slopes, scarifying and compaction of embankment base and provision of drainage works.

Vertical cuts into embankments and slopes shall not be left unfilled overnight unless approved by the geotechnical engineer.

Collapsible soil in the subgrade is considered unsuitable and shall be removed or treated as directed by the geotechnical engineer.

Soluble soils or rocks such as gypsum and rock salt are not permitted to be present in the subgrade of the embankment and shall either be removed or treated to eliminate any potential of leaching in the future. Any remedial measure shall be approved by the geotechnical engineer.

© State of NSW through Transport for NSW 2018

10.3.2. Placing embankment material

Embankments shall be constructed in full width horizontal layers. Normally the layers should not exceed 200 mm, compacted thickness, unless it is shown that the specified compaction can be obtained for a thicker layer. For this purpose, prior approval of the geotechnical engineer is required.

Layers or pockets of substantially varying material should be avoided. The maximum particle size should be less than ⅔ of the compacted layer thickness.

Rock material should be broken down and evenly distributed throughout the layer to prevent the formation of voids and produce a dense, compact embankment.

Construction shall be carried out in such a manner to ensure adequate drainage of the works, and to avoid scour and erosion. The top of the earthworks should be trimmed in accordance with the requirements for preparation for capping.

10.3.3. Compaction of embankment material

All layers of material placed in the works shall be uniformly compacted over the full area and depth of the layer to achieve the relative compaction specified before the next layer is commenced.

Compaction should be completed promptly to ensure moisture content remains conforming and uniform.

Fill batter faces should be compacted as a separate operation or, alternatively, overfilled and cut back. The trimmed and compacted batter face should have a roughened surface to reduce run-off velocities and aid revegetation, if required.

Embankments shall be compacted to the following:

- general fill: compaction B
- structural zone: compaction A

Refer to Section 10.3.4 for details on compaction.

The finished rolled surface prior to placing capping layer shall be true to profile to a tolerance of + 0 mm to -50 mm, and shall be free of depression and ruts.

No traffic other than that required to place the capping shall be allowed on the finished surface.

Any compacted layer, which has deteriorated after an interruption in the earthmoving operation, shall be rectified before further material is placed over it.

In situ field testing for relative compaction shall be carried out on compacted layer in accordance with the project specification.

© State of NSW through Transport for NSW 2018

10.3.4. Compaction standards

The compaction standards shall be as follows:

- compaction A:
  - cohesive soils; not less than 100% maximum dry density as determined by AS 1289.5.1.1: *Methods of testing soils for engineering purposes Method 5.1.1: Soil compaction and density tests – Determination of the dry density/moisture content relation of a soil using standard compactive effort*

    Field density may be determined by AS 1289.5.3.1 *Methods of testing soils for engineering purposes – Soil compaction and density tests – Determination of the field density of a soil –Sand replacement method using a sand cone pouring apparatus* or AS 1289.5.8.1 *Methods of testing soils for engineering purposes – Soil compaction and density tests– Determination of field density and field moisture content of a soil using a nuclear surface moisture–Density gauge – Direct transmission mode*.
  - rock fill or cohesionless soils; no visible deflection of surface under 10 tonne vibratory rollers after six to eight passes
- compaction B
  - not less than 95% maximum dry density as determined by AS 1289.5.1.1

    Field density may be determined in accordance with AS 1289.5.3.1 or AS 1289.5.8.1.

10.3.5. Field moisture control

Compaction shall be done at a moisture content, which allows the specified compaction to be achieved, normally within 2% of optimum moisture content. If there is insufficient moisture in the material for it to be compacted as specified, water should be added uniformly and mixed thoroughly.

Wet material should not be compacted until it has dried out so that the moisture content is within the specified range. The drying process may be assisted by aeration or, where approved by the geotechnical engineer, by using hydrated or quick lime.

10.3.6. Compaction equipment

Selecting the compaction equipment requires careful consideration of the job specification requirements. The plant should be capable of compacting all of the fill area, including its edges and junctions with the natural ground.

The type of compaction equipment is dependent on the nature of the materials to be compacted. The suitable equipment for various types of fill materials are summarised in Table 8.

© State of NSW through Transport for NSW 2018

Table 8 – Suitable compaction equipment

Equipment	Most suitable soils
Smooth wheel rollers, static or vibrating	Well-graded sand and gravel mixtures, crushed rock
Rubber-tyred rollers	Coarse-grained soils with some fines
Grid rollers	Weathered rock, well-graded coarse soils
Sheep foot rollers: • static • vibrating	 • fine-grained soils with more than 2% fines • as for static, sand-gravel mixtures
Vibrating plate (light)	Coarse grained soils with 4-8% fines
Tampers, rollers	All types
Impact rollers, impact compaction	Wide range of soil types and moisture regimes

10.3.7. Embankment construction tolerances

Tolerance limits for embankment construction is provided in Section 14.

10.3.8. Compaction sampling and testing

Field in situ density tests for compaction control shall be done after compaction of each layer according to the project specifications. The minimum test frequencies shown in Table 9 should be used as guidance.

Table 9 – Test frequencies

General fill	Structural zone fill	Capping layer
One test at every 500 m² surface area of each compacted layer	One test at every 300 m² surface area of each compacted layer	One test at every 200 m² surface area of each compacted layer

Field in situ density and laboratory tests shall be done in accordance with relevant Australian standards.

The test results shall be representative of the tested layer at its full depth, width and length. Sample forms for reporting the earthworks tests are given in Figure 16 and Figure 17 in Appendix D, and Figure 18 in Appendix E.

The relative compaction value and the characteristic relative compaction shall be rounded off to the nearest 0.1%.

Frequency of the testing of fill material shall be in accordance with the recommendations in T HR CI 12111 SP.

Compaction standards are given in Section 10.3.4 of this document.

© State of NSW through Transport for NSW 2018

10.4. Test rolling (proof rolling)

Proof rolling shall be done on all layers to detect any possible soft or unstable pockets of fill.

Proof rolling shall be conducted for the subgrade material at the founding level regardless of whether it is existing fill or in situ material to determine the presence of any localised soft zones.

Areas upon which structural zone fills are required to be constructed, all layers of fill and materials within 150 mm of the permanent subgrade level in cuttings should be compacted to be capable of withstanding test rolling without visible deformation or springing.

Suitable plant for test rolling consists of the following:

- static smooth steel wheeled rollers with a mass of not less than 12 t and a load intensity under either the front or rear wheels of not less than 6 t/m width of wheel
- pneumatic tyred plant with a mass of not less than 20 t and a ground contact pressure under either the front or rear wheels of not less than 450 kPa per tyre

  The area over which this ground contact pressure is applied should be not less than 0.035 m² per tyre.
- highway truck with rear axle or axles loaded to not less than 8 t each with tyres inflated to 550 kPa

Where unstable areas exceed 20% of the area being considered by test-rolling, the whole of the area should be ripped, re-compacted and re-presented for test rolling.

10.5. Embankment profile

The completed batter shall be free of rills running down the face of batter. Any loose material on the batter shall be promptly removed as the work progresses.

Fill batter faces should be compacted as a separate operation, or alternatively, overfilled and cut back.

10.6. Embankment drainage and erosion control

Embankment design shall include an appropriate drainage system integrated with track drainage. For high ground water situations, subsoil drainage is required. The exposed slopes shall be protected against erosion.

Refer to T HR CI 12130 ST and T HR CI 12130 MA for drainage design. Section 6.1.6, Section 6.1.7, Section 8.6 and Section 10.6.2 of this standard describe the requirements for drainage and erosion control during design and construction.

© State of NSW through Transport for NSW 2018

10.6.1. Drainage blanket

Where specified or directed by the geotechnical engineer, a free draining filter layer, which is called a drainage blanket shall be provided in embankment fill at suitable locations.

The free draining filter material shall be crushed rock, river gravel or slag composed of sound, hard, strong and durable particles, and complying with T HR CI 12111 SP. The filter material shall not contain more than 5% clay or silt fines.

The drainage blanket shall comprise a geotextile fabric as specified in T HR CI 12111 SP laid along the base and around a layer of free draining filter material to a depth of 300 mm, and spall protection provided at the outlet. The base of the drainage blanket shall grade no gentler than 30H to 1V away from the embankment.

The manufacturer's instructions concerning installation of the geofabric shall be followed.

The filter material shall be placed and spread in such a way to avoid segregation and to ensure that it is not contaminated with foreign materials during construction.

The filter material shall be spread in uniform layers to give the specified compacted thickness in such a manner to avoid damage to the fabric.

Compaction should be obtained using at least eight passes of a vibratory roller of static drum load of six tonnes.

Where adjacent geology and the terrain are likely to produce moisture flow through the embankment, a drainage blanket should be provided at the base of the fill.

Poor ground, seepage or springs encountered during embankment preparation may require additional special treatment. In such situations, advice should be sought from the geotechnical engineer.

10.6.2. Embankment erosion control

Embankment slopes shall be protected against erosion risks. Site features contributing to erosion risk and sedimentation shall be identified prior to design of control measures. The proportion of non-cohesive soils, slope angle, run off characteristics, vegetation and proximity to sensitive areas are some of the factors to be considered in the process.

Typical erosion control measures for embankment slopes are as follows:

- rock armour, protection placed against the embankment face
- rock-facing rip rap, separated from the embankment fill by a graded filter or geosynthetic
- top soiling, grassing and seeding
- mulching and revegetation
- geotextile material or mesh products

© State of NSW through Transport for NSW 2018

- concrete slabs

Alternatively, or in addition, diversion of water from slopes by channel diversion or blocking banks may be adopted. Refer to AS 7638 *Railway Earthworks* for more information.

Erosion control of watercourses is not covered in this standard.

10.7. Rock facing of embankments

Where shown on the construction drawings, embankment batters including embankments at bridge structures shall be provided with a facing of clean, hard, durable rocks or rip-rap separated from the earth fill embankment with a graded filter or geotextile sheet in accordance with specifications given by T HR CI 12111 SP.

Rock facing shall be placed outside of the general embankment dimensions.

Rock used for rock facing shall have a point load strength index (Is) greater than 1 MPa and wet or dry strength variation not more than 35% and a minimum dimension of 500 mm.

Rock should be placed in such a manner that mechanical interlock between stones is maximised.

Where wave action or inundation may occur, a geotextile in accordance with T HR CI 12111 SP shall be placed between the rock facing and the graded filter. In this case the earth fill and filter are placed ahead of the rock facing.

Extreme caution shall be exercised while placing rock facing. The outer rock layer should be placed in such a manner to prevent spillage down the batter. Rocks shall not be allowed to be dislodged and rolled onto any adjacent track or roadway that is in use.

11. Capping layer

Capping is a compacted layer of selected materials that seals the earthwork underneath and provides support to the ballast layer above.

Capping shall be laid on subgrade with a minimum soaked CBR of 8%.

Capping material shall comply with T HR CI 12111 SP.

Material proposed for capping shall be a well graded natural or artificially blended sandy gravely soil. This material shall have sufficient clay fines to provide a binder effect, a sealing layer to permit it to be compacted to high densities by static or vibratory steel-tyred rollers or by pneumatic-tyred rollers.

© State of NSW through Transport for NSW 2018

11.1. Capping material sampling and testing

Samples of material proposed for use shall be tested as specified in T HR CI 12111 SP and results considered in final selection of the material.

Samples of capping material for laboratory testing shall be taken and handled fully in accordance with AS 1726 *Geotechnical site investigations*, and AS 1141.3.1 *Methods for sampling and testing aggregates Method 3.1: Sampling Aggregates*

The material shall be tested in accordance with AS 1289 *Methods for testing soils for Engineering purposes*.

11.2. Preparation for capping

The capping layer shall be laid on subgrade with a minimum CBR of 8%.

Refer to Section 10.3.3 for details on preparation for capping layer.

The capping material shall be transported from the source to the work in vehicles that do not cause any loss of material. The material shall be suitably damp to prevent segregation during transit.

11.3. Spreading, placing, compaction and trimming of capping

The capping layer shall be constructed in a single layer to a total compacted thickness of 150 mm. The material shall be spread in uniform horizontal layers. Spreading shall be done over the full width of the capping layer and by a method, which ensures segregation does not occur, so as not to rut or disturb the compacted layer.

Compaction shall achieve a minimum value of 95% maximum dry density (modified) as determined by AS 1289.5.2.1.

The top of the final layer shall be graded and trimmed, and material shall be added as necessary to produce an even sealing layer.

Unless stated otherwise, the cross-fall of finished capping layer shall be 30H:1V away from the track.

11.4. Sub-ballast

Sub-ballast in this standard refers to a 'permeable capping', which is more appropriate than an impermeable capping under certain circumstances, where the foundation consists of free draining materials such as rock fill or sand.

Sub-ballast is designed as a filter material to limit fouling by subgrade material and to prevent itself from fouling the ballast.

© State of NSW through Transport for NSW 2018

The grading of the sub-ballast is important and shall be specifically designed for a particular subgrade and ballast. Laboratory testing of both the subgrade and the ballast is required to be able to design a grading for sub-ballast.

Sub-ballast can provide a better solution than impermeable capping in areas where the subgrade is constantly wet or in soft rock formations. The performance of sub-ballast is not diminished by saturation to the same extent as capping, and sub-ballast is more easily compacted.

11.5. Capping layer construction tolerances

The tolerance limits for the capping layer is given in Section 14.

12. Widening of existing embankments

Embankments are widened for the following reasons:

- to provide access to the track side
- to provide width for structures such as electrification masts
- to provide for additional tracks
- to rectify unstable or over-steep embankments
- to dispose of spoil from other works

Where existing embankments are required to be widened, an adequate investigation, design process and construction shall be carried out.

Design and construction shall be in accordance with Section 10 of this standard.

For widening other than for additional tracks, a capping layer of suitable material shall be provided at the top of the widened embankment. Construction should be in accordance with Section 11 of this standard.

The capping layer shall be at a level below the track capping level or track formation level, with a cross-fall of 30H:1V away from the track.

12.1. Preparation for embankment widening

Preparing an embankment widening shall involve the following:

- surveying and marking out
- preparing the foundation, rectification of ground if required
- proof rolling
- locating, extending and clearing drainage structures

© State of NSW through Transport for NSW 2018

12.2. Drainage structures

Existing culverts and particularly suburban drains shall be located, extended and cleared by hydro-blasting or similar measures to ensure satisfactory flow of watercourses.

Ensure that moisture is not trapped between the existing and the widened embankment and water does not pond against the toe of the embankment.

12.3. Drainage blanket

A drainage blanket shall be laid at the base of the embankment and at locations where seepage paths are present in accordance with Section 10.6.1.

Figure 13 in Appendix C illustrates a typical benching procedure with drainage blanket construction.

12.4. Drainage and erosion control

Appropriate drainage and erosion control measures shall be carried out for the widened section.

Refer to Section 10.6 for drainage and erosion control considerations.

A windrow shall be provided on the embankment shoulder in sandy soils and the shoulders graded to drain to controlled drains down the embankment.

Cess drains, catch drains and mitre drains shall be provided in accordance with T HR CI 12130 ST and T HR CI 12130 MA. Drains down the embankment shall be protected from erosion.

12.5. Embankment construction

The embankment should be constructed by a progressive benching procedure to ensure proper integration into the existing structure.

Figure 10 through to Figure 15 in Appendix C illustrates a typical progressive benching and drainage blanket details in embankment construction.

13. Earthworks near structures

Structures include bridge piers and abutments, wing walls, box culverts, pipe culverts, headwalls, tunnels, retaining walls, station platform walls, overhead wiring structures, signal gantries and towers.

Before starting any earthworks near structures, an investigation shall be done to ascertain whether any structures located near the site are in the heritage listing.

© State of NSW through Transport for NSW 2018

13.1. Construction

Unless otherwise specified in the project specific construction drawings the following shall be considered when constructing earthworks near structures.

Care shall be exercised in constructing earthworks within 5 m of structures to avoid damage to the structures.

Non-vibratory compaction equipment shall be used within this distance and adjacent to the structure as defined in Table 10.

Table 10 – Compaction of earthworks near structures

Structure	Compaction method
Bridge abutment and wing walls	Hand held compaction equipment for full structure height for a distance of ⅔ h from wall (h = overall height of structure)
Pipe culverts	Hand held compaction equipment for distance 'd' from the sides and above the top of the pipe (d= outer diameter of pipe)
Box culverts and culvert wing walls and retaining wall	Hand held compaction equipment for full structure height for a distance ⅔ h from wall (h = overall height)

Selected backfill shall be placed adjacent to structures except at locations adjacent to weep holes in accordance with Table 11.

Table 11 – Select fill adjacent to structures

Structure type	Selected backfill width	Selected backfill height
Bridge abutments	2 m	h
Box culverts, precast culverts	h/3	h + 300 mm
Corrugated steel pipes and arches	0.5 m	h + 500 mm
Retaining walls	h/3	h

Note: h = overall height of the structure

Selected backfill shall consist of a granular material having a maximum dimension not exceeding 50 mm and a plasticity index, determined in accordance with AS 1289.3.3.1, neither less than 6% nor more than 15% and minimum CBR of 19%.

Free draining material may be required immediately behind the retaining walls.

The fill shall be placed in horizontal layers with a compacted thickness between 100 mm and 150 mm.

Layers shall be placed simultaneously on both sides of box culverts to avoid differential loading.

Compaction shall start at the wall and proceed away from it.

The existing slope behind the structures shall be cut in the form of successive horizontal terraces, each terrace being at least 1 m in width and 600 mm in height.

© State of NSW through Transport for NSW 2018

In case of spill-through abutments, rocks shall not be dumped against the columns or retaining walls but shall be built up evenly by placing hand around or against such structures.

In the case of framed structures, embankments at both ends of the structure shall be brought up simultaneously and the difference between the levels of the embankments at the respective abutments shall not exceed 500 mm unless otherwise specified in the construction drawings or within the project specifications.

Adjacent to weep holes, free draining filter material encapsulated in a suitable non-clogging geotextile fabric should be placed horizontally for at least 300 mm from, and vertically for 450 mm above the weep hole. Free draining material should be provided by broken stone or river gravel consisting of clean, hard, durable particles graded from 50 mm to 10 mm such that the maximum particle dimension does not exceed 50 mm and no more than 5% by mass passes the 9.5 mm sieve.

13.2. Excavation near structures

Care should be exercised when excavating within 5 m of structures; for example, near overhead wiring structures, near retaining walls, when benching into slopes for embankment widening or when excavating for track reconditioning.

When excavating adjacent to structures, there is a risk that the footings can be undermined or the structure destabilised, resulting in structural failure and potential collapse.

Excavations near the structure footings shall not be permitted unless documented engineering advice and approval are obtained from the responsible authority.

No excavation shall be done within 5 m distance without prior analysis of structure stability with respect to the effects of the excavation.

No excavation shall be done below the base of the footings of any structure, for example, bridges, retaining walls and station platform walls without prior analysis of structure stability with respect to the effects of the excavation and approval.

The approval shall be in the form of a certification by a suitably qualified structural engineer based on the results of an appropriate geotechnical or structural investigation.

Excavation shall not be done at or near the toe, crest or at any point on the sloping surface of embankments and cuttings without prior approval from the geotechnical engineer.

© State of NSW through Transport for NSW 2018

14. Tolerances for earthworks

Section 14.1 and Section 14.2 provide the tolerances of finished earthworks.

14.1. Vertical tolerances

Vertical tolerances are given for the following:

- embankments
- cuttings
- transitions between cut and fill
- top of benches and berms
- capping layer

14.1.1. Vertical tolerances in embankments

Vertical tolerances in embankments are as follows:

- top of the structural zone +0 mm to -50 mm
- top of the general fill zone +40 mm to -40 mm

14.1.2. Vertical tolerances in cuttings

Vertical tolerances in cuttings are as follows:

- floor of cut (top of common earthworks): other than rock +40 mm to -40 mm
- floor of cut (top of common earthworks): rock +0 mm to -80 mm
- top of structural zone: other than rock +0 mm to -50 mm

14.1.3. Vertical tolerances at transitions between cut and fill

Vertical tolerances at floor of cut to fill transition is +0 mm to -50 mm.

14.1.4. Vertical tolerances for top of benches and berms

Vertical tolerance for top of benches and berms is +50 mm to -50 mm.

14.1.5. Vertical tolerances for capping layer

The finished surface of the capping shall be within 25 mm of the level shown on the drawings and comply with the following:

- the algebraic difference of the deviations from the correct level for any two points 20 m apart on the centreline shall not exceed 15 mm

© State of NSW through Transport for NSW 2018

- the deviation from a 3 m straight edge laid on the surface parallel to the centreline shall not exceed 10 mm
- when the capping layer is tested with a 3 m straight edge laid perpendicular to the centre line the deviation from design profile shall not exceed 10 mm concavity

14.2. Horizontal tolerances

The width of the base of cuts and fills, benches and berms, shall not be less than the specified dimensions. The maximum positive tolerance (towards the track) is 300 mm, unless approved by the geotechnical engineer.

Refer to Table 4 for tolerances for the excavation of cut batters.

Embankments batters should not be steeper than the slope specified.

The width of the capping layer from the design centreline to the finished top of embankment slopes or toe of batters in cuttings shall be not less than the dimensions contained in Table 1 and Table 2. Refer to Appendix A and Appendix B for the cross-sectional diagrams.

15. Rehabilitation of formation

In rehabilitating the formation, the following shall be considered when preparing the work plan and design:

- investigation and assessment of ground condition
- rectification of drainage deficiencies
- removal and disposal of failed ballast to the formation level
- removal and disposal of failed formation material
- provision of capping material on the original formation
- provision of trench drains
- repair or rectification of degraded, ineffective, blocked or sagging culverts

Refer T HR CI 12120 GU *Track Reconditioning Guidelines* for details.

16. Inspection and assessment of earthworks

The purpose of inspection and assessment is to ensure that life cycle performance goals for earthworks are met through a systematic management strategy of physical assets.

Earthworks should be examined to determine its existing condition and to monitor the performance for safety of transportation infrastructure.

© State of NSW through Transport for NSW 2018

16.1. Management responsibilities

The organisation responsible for the infrastructure maintenance shall be responsible for the following:

- implementing the appropriate technical maintenance plan for cuttings and embankments
- ensuring that the responsibilities of all persons responsible for safe management of cuttings and embankments are clearly identified in writing and understood by those persons
- organising all scheduled and unscheduled inspections by trained track staff
- organising all scheduled and unscheduled inspections and assessments by geotechnical engineer
- reviewing the inspection regime for safe management of earthworks as required
- implementing adequate safety measures for cuttings and embankments according to the identified risk after inspection and assessment
- implementing geotechnical repair or remediation to maintain required service levels
- recording all scheduled and unscheduled inspections and assessments

Geotechnical problem management shall be done in accordance with the T HR CI 12101 ST *Geotechnical Problem Management*.

16.2. Scheduled inspections

Scheduled inspections may comprise the following:

- regular periodic general inspections of identified problem locations
- regular periodic detailed inspections and assessment of identified problem locations
- regular periodic inspections of all other cuttings and embankments

16.3. Unscheduled inspections

Unscheduled inspections include the following:

- defined event inspections of nominated locations at the onset of defined events exceeding a specified magnitude; events include rainfall, earthquake, ground movement, ground water level, or movement of a defined feature
- 'for cause' inspections initiated by driver's reports of poor ride quality, rock fall events, track patrol reports of geotechnical instability features, or outside party reports of geotechnical events

© State of NSW through Transport for NSW 2018

Onset of a 'defined event' shall be specified by the organisation responsible for the infrastructure maintenance.

© State of NSW through Transport for NSW 2018

Appendix A Single track cross section

Shoulder distances are provided in Table 1 and Table 2.

Figure 3 shows a typical cross section of a single track on an embankment.

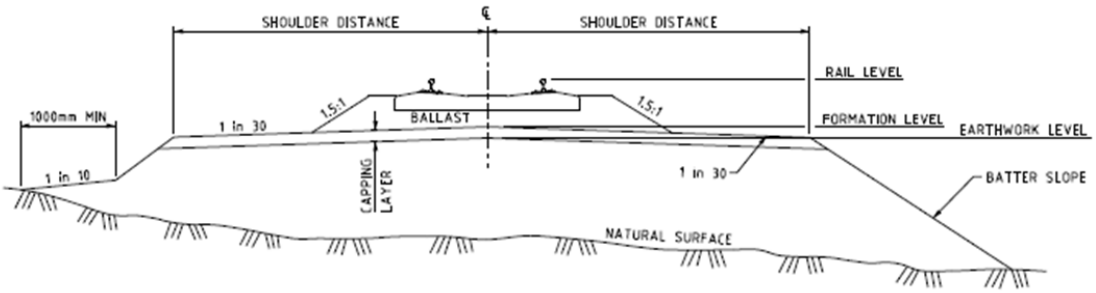

Figure 3 – Single track embankment cross section

Figure 4 shows a typical cross section of a single track on a cut section.

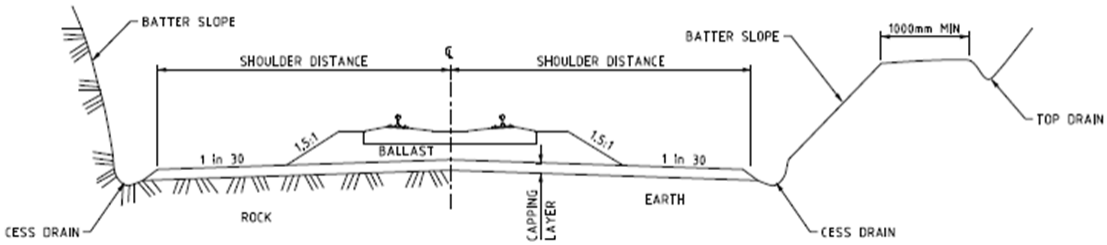

Figure 4 – Single track cutting cross section

Where space permits, the distance between the top of the batter slope and the top drain should be increased to allow for mechanised maintenance equipment.

Figure 5 shows a typical cross section of a single track on an embankment with special width requirements for shunters and guards walkways and train examination areas.

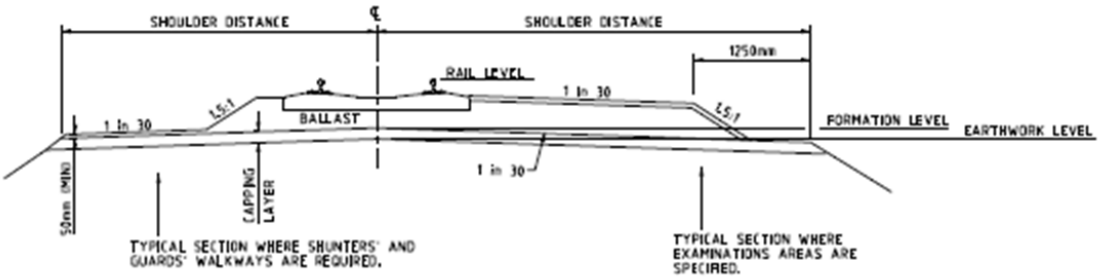

Figure 5 – Single track special width requirements

© State of NSW through Transport for NSW 2018

Appendix B Double track cross section

Shoulder distances are provided in Table 1 and Table 2. Track centres shall be in accordance with ESC 215.

Figure 6 shows a typical cross section of a double track on an embankment.

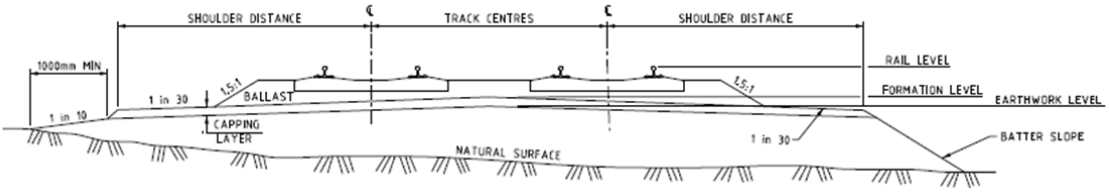

Figure 6 – Double track embankment cross section

Figure 7 shows a typical cross section of a double track in a cutting including top drain and cess drain.

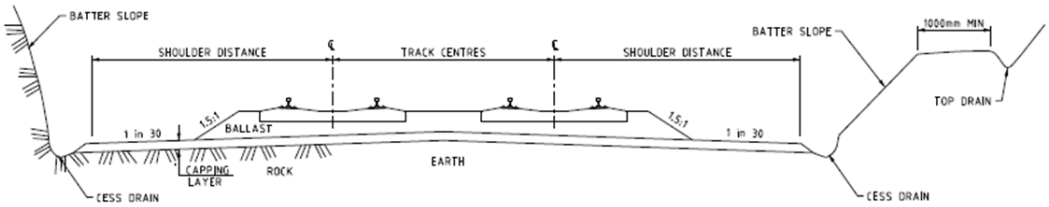

Figure 7 – Double track cutting cross section

Figure 8 shows a typical double track cross section with surface and subsurface centre drains.

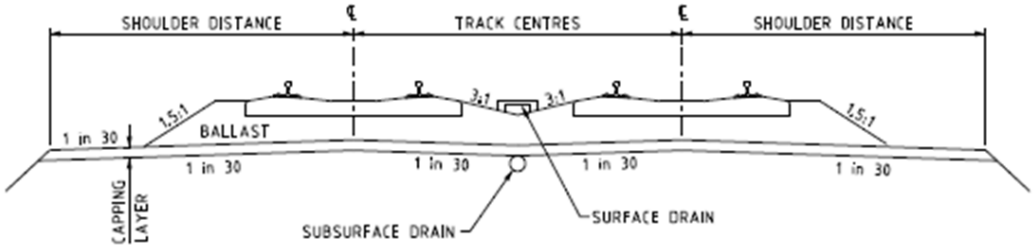

Figure 8 – Double track centre drain cross section

Figure 9 shows a typical double track cross section with shunters and guards walkways.

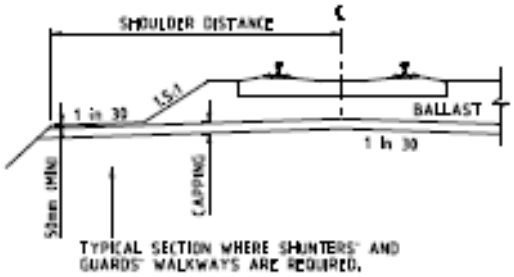

Figure 9 – Double track special width requirements

© State of NSW through Transport for NSW 2018

Appendix C Typical earthworks construction

Figure 10, Figure 11 and Figure 12 show typical construction and benching procedures.

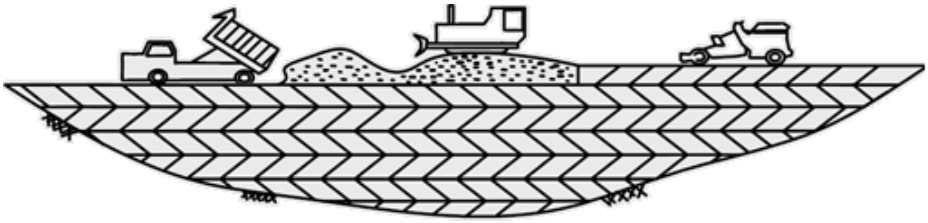

Figure 10 – Embankment construction in layers

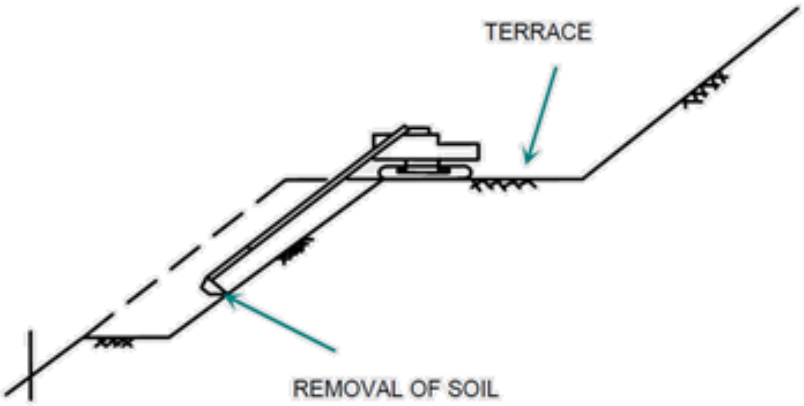

Figure 11 – Removal of soil from terrace

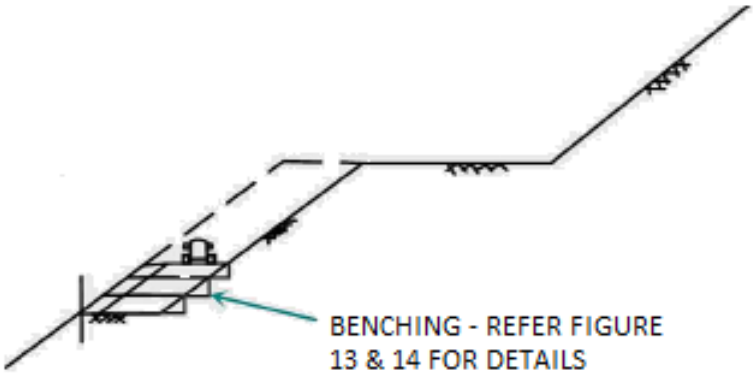

Figure 12 – Benching for fill layers

© State of NSW through Transport for NSW 2018

Figure 13 shows the typical components of construction and benching procedure.

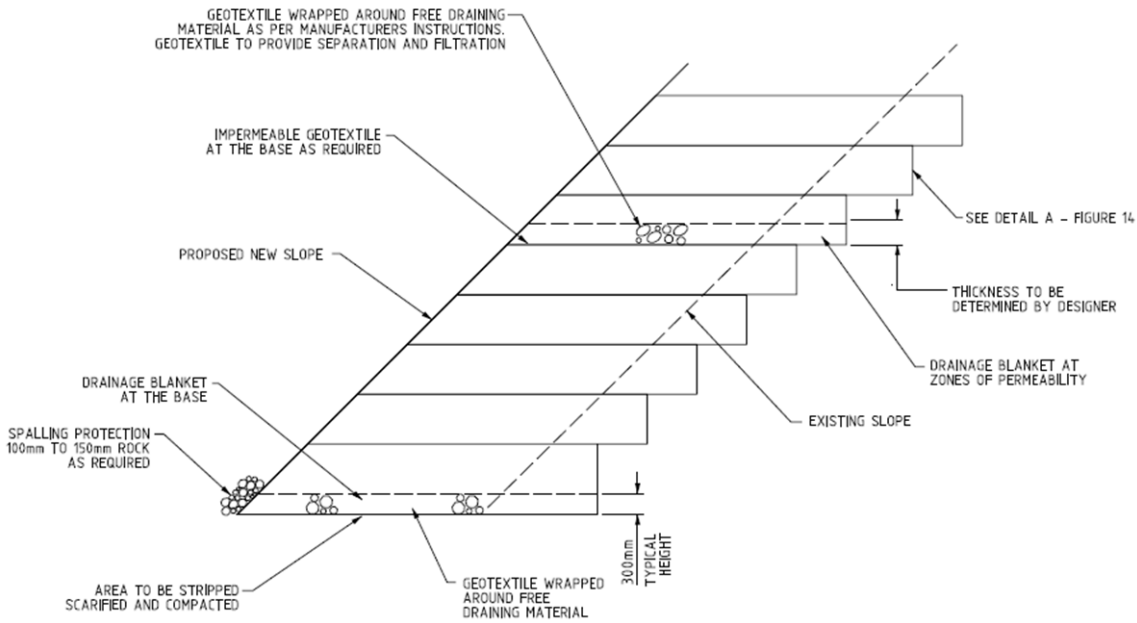

Figure 13 – Typical benching procedure

The spalling protection should comprise 100 mm to 150 mm rock at outer toe of proposed new slope.

The drainage blanket can be at the base and at zones of permeability.

Geotextile should be wrapped around free draining material as per manufacturer's instructions. Geotextile should provide separation and filtration.

Impermeable geotextile can be at the base of the drainage blanket as required.

The drainage blanket should typically be of 300 mm high.

Additional details of cut-ins to the existing slope are provided in Figure 14

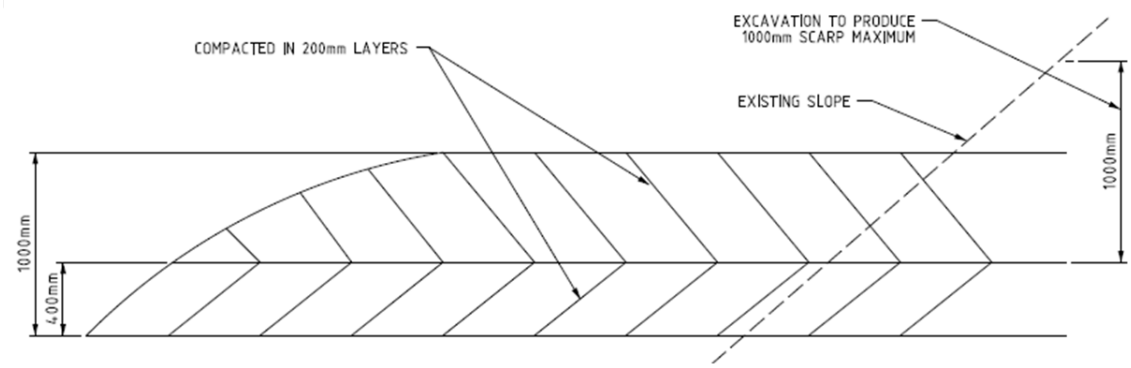

Figure 14 – Detail A

Figure 15 shows the details of the treatment of localised seepage or porous zone.

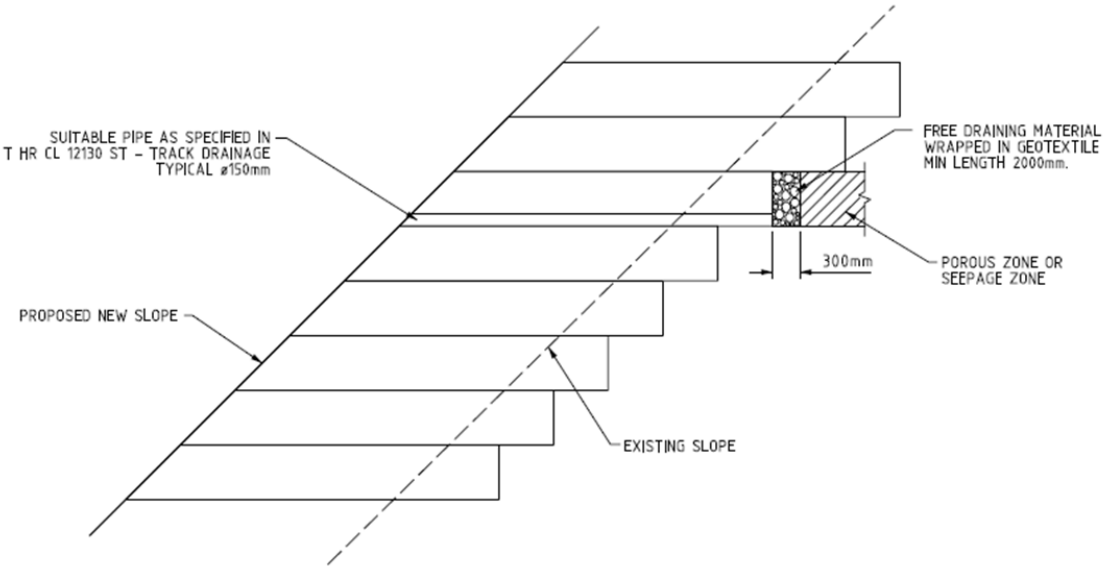

Figure 15 – Treatment of localised seepage or porous zones

Appendix D Daily earthworks report

Figure 16 and Figure 17 provide a sample of the daily earthworks report.

DAILY EARTHWORKS REPORT
Sheet No.:
Date:
Job No.:
Project:
Constructor:
Superintendent:
Inspection and testing by:
Earthworks in current progress:
Materials testing: Refer to material type, source, purpose of testing, sampling methods and locations, test types, sample reference numbers, results obtained, and to whom distributed
Field density testing: Refer to types of test, section of work to which tests apply, test locations and levels, test reference numbers, results obtained, and to whom distributed.
Laboratory compaction testing: Refer to test methods, location of sampling, sample reference number, results obtained, and to whom distributed.
Works meeting geotechnical requirements: Refer to work type (e.g. stripping, subgrade compaction), basis of assessment (e.g., inspection, test reference numbers, and the like), extent of works apparently complying and requirements met.

SAMPLE
SAMPLE

Figure 16 – Sample daily earthworks report

DAILY EARTHWORKS REPORT		
Works failing to meet geotechnical requirements: Refer to work type (e.g., stripping, subgrade compaction), basis of assessment (e.g., inspection, test reference numbers, and the like), extent of work apparently failing to comply, requirements not met, and action taken (instructions issued, retests ordered, and the like)*		
Remarks: Include observations on works, site conditions, meetings or conversations on site, and the like.		
Signed:	**Position:**	**Date:**

SAMPLE

Figure 17 – Sample daily earthworks report (continued)

Appendix E Earthworks summary report

Figure 18 provides an example of an earthworks summary report.

EARTHWORKS SUMMARY REPORT

Sheet No.:

Date:

Job No.:

Project:

Constructor:

Superintendent:

Broad description of earthworks undertaken, extent of fill, etc.:

Observations on stripping and site preparation:

Observations of fill materials:

Summary of testing: Refer to attached result certificates, location plans, etc.:

Location onsite and type of earthworks	Estimated Volume m^3	Number of tests				
		Material quality		Field density		Compaction
		Total	**Failed**	**Total**	**Failed**	

Action taken where non-compliance occurred:

Remarks:

Signed:

SAMPLE
SAMPLE

Figure 18 – Sample earthworks summary report

© State of NSW through Transport for NSW 2018