SECTION 15

ISSUE AND AMENDMENT OF DRAWINGS

15 ISSUE AND AMENDMENT OF DRAWINGS

15.1 GENERAL

Provisions in this Section apply to the development of bridge construction drawings by the Bridge Engineering Section of the RTA.

Bridge construction drawings, for bridges that will become the property of the RTA that are prepared by external parties, shall be prepared in accordance with the provisions of this Section except where internal RTA procedural processes are specified.

15.2 ISSUE OF PRELIMINARY DRAWINGS

Where prepared by the RTA's Bridge Engineering Section, any drawings that have not been formally approved and are issued to any party for the purpose of checking, comment or review, shall be marked to clearly show the stage of development of the project/drawings. This shall be shown as percentage complete and it shall be placed beside the words Issue Status in the title block, a typical description being 75% COMPLETE. Drawings that are in the development stage shall have a numerical character shown in the Issue box in the bottom right hand corner of the title block. The first issue of the drawing for the purpose of checking shall be denoted Issue 0. When Issue 0 is amended it shall become Issue 1 and this number shall be updated with each successive issue of the drawing.

Re-issues of proposal sketches for bridge designs shall also follow the above procedure.

Preliminary drawings issued to any party outside the design office shall carry a watermark placed diagonally across the sheet and the wording shall be:
"PRELIMINARY – NOT FOR CONSTRUCTION". See Figure 15.2.

15.3 SUBMISSION OF DRAWINGS FOR APPROVAL

Where the drawings have been prepared by the RTA's Bridge Engineering Section, and the drawings have been checked and signed by the appropriate officers, they shall be submitted to the Principal Bridge Engineer or appropriate Manager for approval in accordance with Bridge Section Standard Operating Procedure, Approval to Drawings TB-SOP-404002.

Drawings submitted for approval shall have Issue A recorded in the appropriate position in the title block and the words "FOR CONSTRUCTION" entered into the space provided beside the words Issue Status in the title block.

Where consultants have been commissioned to complete bridge designs for the Authority or for bridges that will become the property of the Authority in the future, the consultant shall supply the Authority with an A1 size tracing paper copy

of the drawings for acceptance/approval by the Principal Bridge Engineer or other delegated officer. Following acceptance/approval of the drawings, the consultant shall supply the Authority with an individual electronic copy of each drawing file (in either dgn, dwg or dwf format) and a multipage pdf file (containing all drawings) that can be read by and stored on the Authority's equipment.

15.4 AMENDMENT OF APPROVED DRAWINGS

For drawings prepared by the RTA's Bridge Engineering Section, after any drawing is formally approved and issued it may only be amended in accordance with the following procedures:

SHEETS OTHER THAN COVER SHEETS

1. The drawing file shall be copied from the appropriate CAD register and renamed with an appropriate suffix ie _B for the first amendment, _C for the second amendment.

   The drawing shall be registered with the Leader CAD Development and it shall be stored in the appropriate folder under the project number allocated to the project.

2. The required amendments shall be carried out.

   Amendments shall be denoted by their inclusion in a 'box' or cloud (using a thin wavy line) together with the alphabetic character corresponding to the Issue No placed in a small box adjacent to the amendment. Text used to denote the amendment (B, C etc) shall be 5mm high and the box which encloses the letter shall measure 10mm x 10mm with line thickness 0.5mm.

   When information or details have been removed a "box" or cloud (using a thin wavy line) denoting the area that information has been removed from, together with the letter corresponding to the revision placed in a small box adjacent to the amendment. A brief description of what was deleted shall be placed both inside the "box" or cloud and in the Revision Block above the Title Block. See Figure 15.4.1

   When information or details have been superseded by other information and the original information or detail is to be retained on the drawing, two parallel diagonal lines (at 45 degrees) shall be placed through the detail and the word "SUPERSEDED" shall be placed between the parallel lines. Reference shall be made to the location of the information or detail that has superseded the original information either inside the parallel lines or beside the amendment "box" or cloud. See Figure 15.4.1

   Where previously amended drawings require further amendments, the amendment "box" or cloud and the boxed text used to denote previous amendments shall be removed. The details of previous amendments shall remain in the Revision Block immediately above the Title Block and the initials of the officer that authorised the preceding amendments shall be typed into the space provided in the Revision Block.

3. The required details in the Revision block shall be completed.
   This will include the Issue, Date, a description of the revision, the initials of the Drafting Officer that completed the revision as well as the initials of the officer that checked the revision. The officer responsible for the release of the revision shall be required to initial, by hand, in the space provided.

4. The Issue No shown in the previously approved Issue of the drawing shall be revised i.e. B for first amendment, C for second amendment etc.

   Figure 15.4.1 shows the correct format for the amendment of sheets other than cover sheets.

COVER SHEETS

Once approved and issued, the Cover Sheet of a set of drawings shall be not be revised or reissued unless information shown on the Cover Sheet is changed. Some examples of changes that would necessitate the reissue of a Cover Sheet are where a sheet is added to or deleted from the set or the title of a sheet is changed and/or the information provided for the various loadings required by AS 5100, listed reports or any other similar information requires amendment.

Where the Cover Sheet of any set of drawings must be revised and reissued, the following procedure shall be followed.

1. Drawing file shall be copied from the appropriate CAD register, renamed accordingly. The filename shall have the suffix _B added for the first amendment, _C added for the second amendment etc. required. In addition to this, the Issue No in the bottom right hand corner of the sheet shall also be amended i.e. Issue B for first amendment, Issue C for second amendment etc.

   The drawing shall be registered with the Leader CAD Development and it shall be stored in the appropriate folder under the project number allocated to the project.

2. Place the amendment block on the sheet directly above the title block and place the required details in the amendment block.

   Figure 15.4.2 shows the correct format for the amendment of Cover Sheets.

15.5 PROCEDURE FOLLOWING AMENDMENT OF APPROVED DRAWINGS

The following procedure shall be strictly adhered to upon completion of any required amendments to approved drawings;

1. The approved amended drawings, printed A1 size on tracing paper, shall be supplied to the Documentation Officer for the purposes of plan printing, microfilming and storage. The Documentation Officer shall provide a copy or copies of the approved amended drawings to the client in accordance with the client's request. The client copy of the drawings shall be supplied with a completed Drawing Register and Document Transmittal Form (Form No TB-SOP-405001-TFB001).

2. The Documentation Officer shall retain an A3 size paper master copy of the approved amended drawings for storage in the Master Plan Library.

3. The A1 size approved amended drawing or drawings shall be forwarded to Micrographics Section for microfilming together with the instruction that the microfilm card for the corresponding original drawing or drawings be removed from the permanent record set of microfilm cards retained by Micrographics Section, marked as "SUPERSEDED" and placed at the back of the set of microfilm cards.

4. The Documentation Officer shall be responsible for;

   (a) the printing and distribution of the amended drawing or drawings to all officers in possession of half size sets of the drawings
   (b) the permanent storage of the amended drawing with the Master Copy of half size drawings retained by the Bridge Section.

   The corresponding original half size Master Copy of the drawing or drawings shall be marked as superseded in an appropriate manner and shall be retained with the Master Copy for record purposes.

6. After the approved amended A1 size drawing or drawings have been microfilmed and returned from Micrographics Section, the Documentation Officer shall place the amended drawing or drawings in the full size set of drawings retained by the Bridge Engineering Section and update the drawing storage database accordingly.

The corresponding superseded drawing or drawings shall be retained with the full size set of drawings and after having been marked as superseded in an appropriate manner shall be placed at the back of the drawing set.

15.6 AUTHORISATION FOR RELEASE OF AMENDED DRAWINGS

GENERAL ARRANGEMENT DRAWINGS

1. Where amendments to the drawing are of a cosmetic or minor nature only, the drafting officer responsible for the preparation of the amended drawing shall record the names of the officers responsible for the initial design, design check and approval by the appropriate Manager in the spaces provided in the title block.
   The Approval Block, provided for the signature of the Principal Bridge Engineer shall have the name of the appropriate officer recorded electronically, together with the date of the original approval.

2. The drafting officer responsible for the preparation of the amended drawing shall record their initials and the initials of the officer responsible for the checking of the amended drawing in the appropriate spaces in the amendment block immediately above the title block. Initials shall be electronic so that they remain with the drawing file.

   After having thoroughly checked that the required amendments have been carried out satisfactorily, the officer responsible for authorising the release of the amended drawing shall sign, or initial by hand, in the appropriate space provided in the amendment block immediately above the title block.

3. Where significant changes to the initial design are required i.e. a change in bridge type or span lengths, the officers that formally approved the initial design shall record their signatures by hand in the appropriate spaces in the title block.

   The completed drawing shall be submitted to the Principal Bridge Engineer for review and signature in the approval box on the drawing.

DRAWINGS OTHER THAN GENERAL ARRANGEMENT DRAWINGS

The recording of names and/or signatures on drawings other than General Arrangement drawings shall be in accordance with Parts 1 and 2 of Clause 15.5.1 of this Manual.

Amended drawings shall not be released from Bridge Engineering Section until the officer responsible for the authorisation of the release of the drawings has initialled or signed by hand in the appropriate space in the revision block.

In most cases, the officer responsible for the release of the amended drawing or drawings will be the Manager, Bridge Design Projects, or the Manager, Bridge Rehabilitation Projects under whose supervision the design was initially completed.

Where this officer is unavailable to initial the drawing by hand, either the engineer responsible for the design or the Manager, Structural Drafting or the Project Leader responsible for the production of drawings for the project shall be required to initial the drawing by hand in the appropriate area.

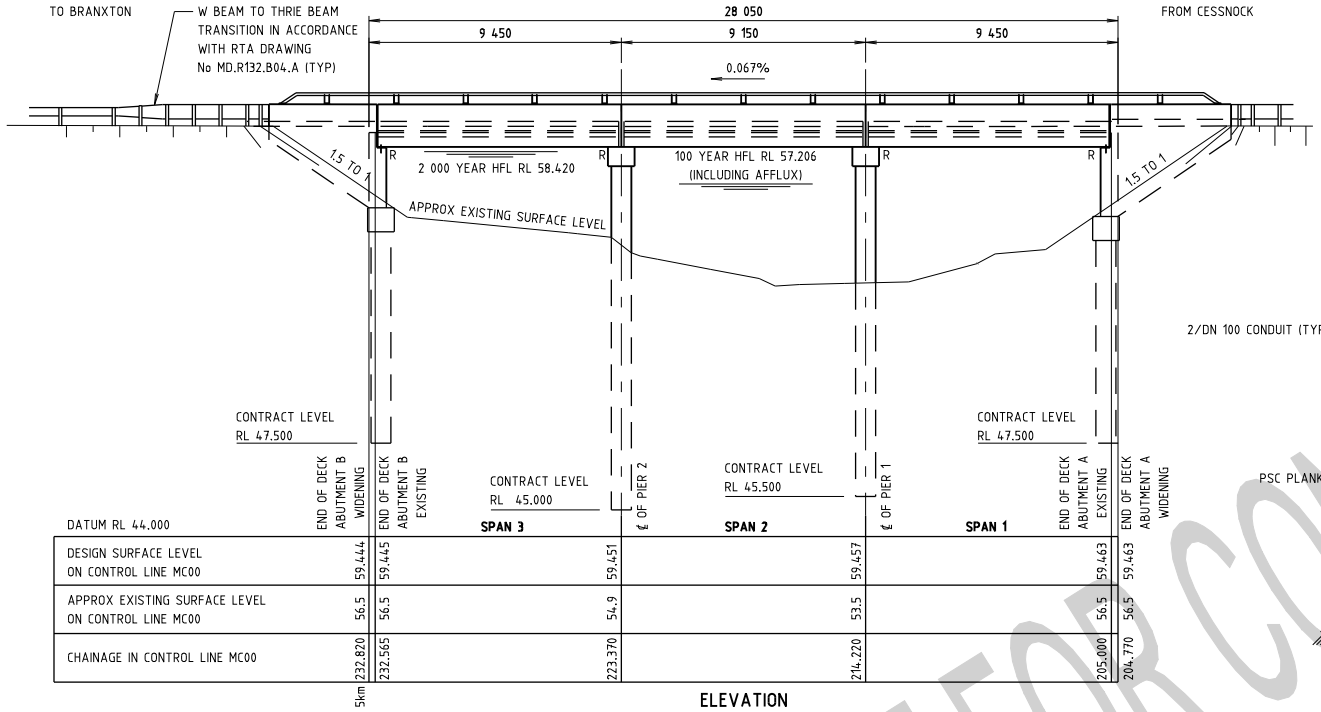

ELEVATION

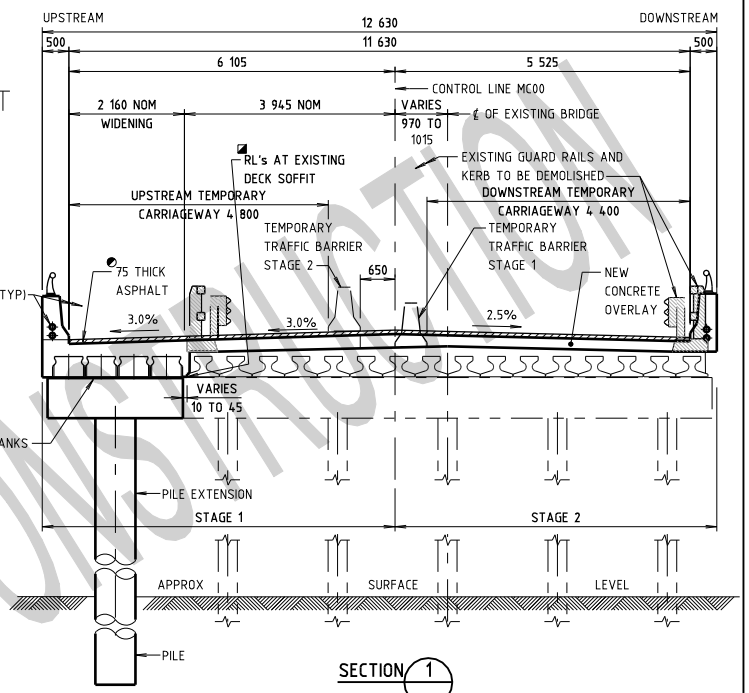

SECTION 1

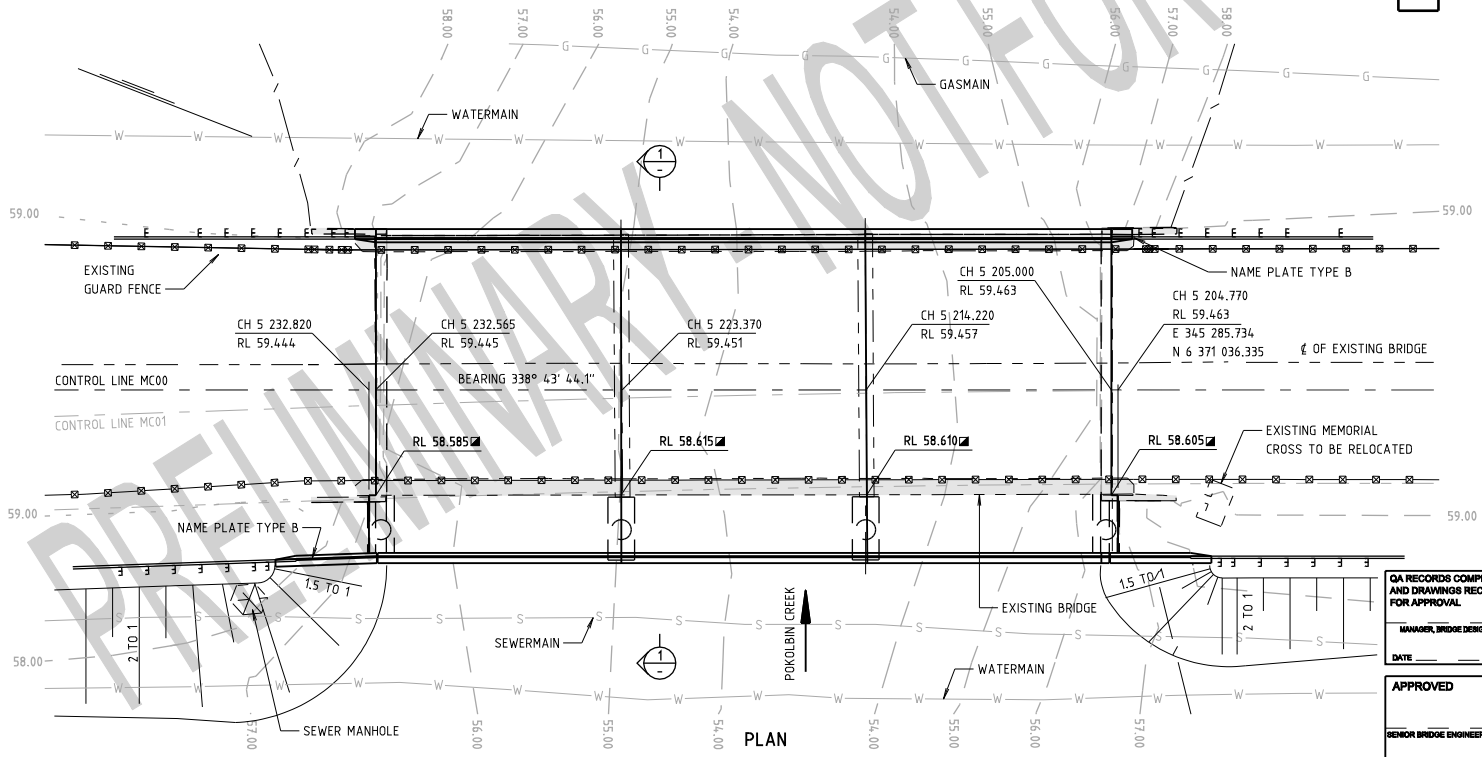

PLAN

GENERAL NOTES

FIGURE 15.2

SCALE 0 1 2 3 4 5m (1 0.5) OR AS SHOWN.

DIMENSIONS ARE IN MILLIMETRES
CHAINAGES AND REDUCED LEVELS ARE IN METRES
REDUCED LEVELS ARE RELATED TO AUSTRALIAN HEIGHT DATUM.

◐ COMBINED SYSTEM OF WEARING SURFACE AND SUITABLE BITUMINOUS WATERPROOFING MEMBRANE.

◪ TO BE VERIFIED ON SITE PRIOR TO CONSTRUCTION. TOP OF ABUTMENT WALL AND HEADSTOCK RL's ON SHEET Nos 4, 5 AND 13 SHALL BE ADJUSTED ACCORDINGLY. FOR EXISTING UTILITIES SEE DRAWING REGISTRATION No 0220 085 BA 3799.

FOR CONSTRUCTION SEQUENCE SEE SHEET No 6

ISSUE	DATE	REVISION	PREP	CHECK	AUTH

ROADS AND TRAFFIC AUTHORITY OF NSW

MAIN ROAD No 220 — CITY OF CESSNOCK

BRIDGE OVER POKOLBIN CREEK AT 5.0km NORTH OF CESSNOCK WIDENING

GENERAL ARRANGEMENT

PREPARED BY
BRIDGE ENGINEERING
110 GEORGE STREET
PARRAMATTA NSW 2150
PHONE (02) 8837-0802
FACSIMILE (02) 8837-0055

CLIENT
HUNTER REGIONAL OFFICE
59 DARBY STREET NEWCASTLE
LOCKED BAG 30 NEWCASTLE NSW 2300
PHONE (02) 4924-0240
FACSIMILE (02) 4924-0344

PREPARED	CHECKED	REGISTRATION No OF PLANS	
DESIGN		0220 085 BC 0956	
DRAWING		RTA BRIDGE NUMBER	1656
		ISSUE STATUS:	PRELIMINARY
MANAGER, BRIDGE DESIGN PROJECTS		SHEET No 2	ISSUE 2

QA RECORDS COMPLETED AND DRAWINGS RECOMMENDED FOR APPROVAL
MANAGER, BRIDGE DESIGN PROJECTS
DATE

APPROVED
SENIOR BRIDGE ENGINEER (NEW DESIGN)
DATE

CAD No KP2F152.dgn

THIS DRAWING IS CONFIDENTIAL AND SHALL ONLY BE USED FOR THE PURPOSE OF THE NOMINATED PROJECT.

PRELIMINARY - NOT FOR CONSTRUCTION

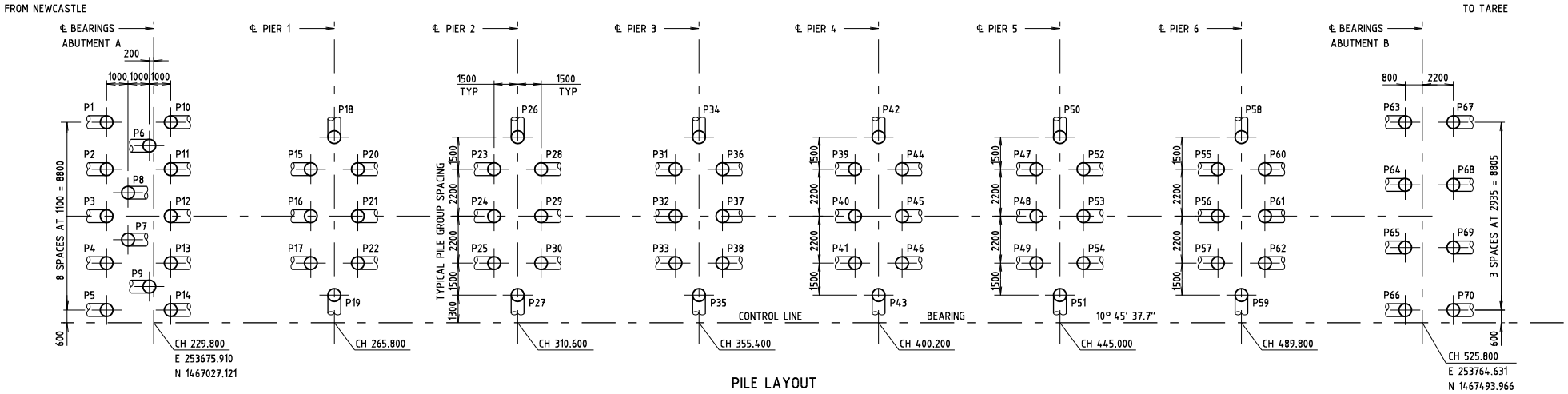

PILE LAYOUT
NOT TO SCALE

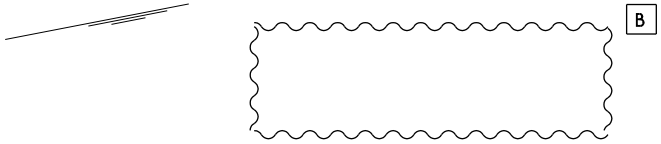

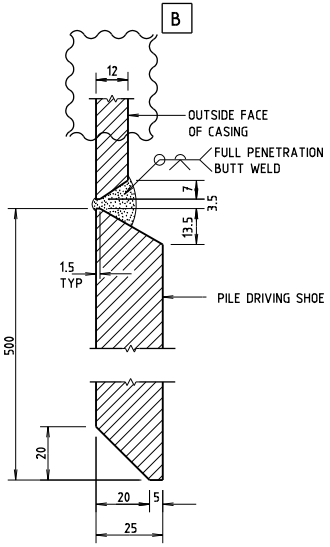

DETAIL A/2

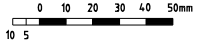

END BEARING EXAMPLE SHOWN

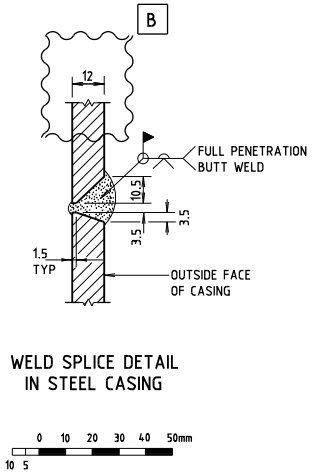

WELD SPLICE DETAIL
IN STEEL CASING

FOUNDATION DESIGN

PILES SHALL BE FOUNDED IN SANDSTONE/SILTSTONE WITH THE FOLLOWING MINIMUM LENGTH OF ROCK SOCKET:-

- ABUTMENT A - 1500 INTO VERY HIGH STRENGTH SANDSTONE;
- PIER 1 - 750 INTO HIGH STRENGTH SANDSTONE;
- PIERS 2 TO 7 - 1000 INTO HIGH STRENGTH SANDSTONE/SILTSTONE;
- PIERS 8 TO 10 - 750 INTO HIGH STRENGTH SANDSTONE;
- ABUTMENT B - 300 INTO VERY HIGH STRENGTH SANDSTONE.

PERMANENT STEEL CASING SHALL BE EXTENDED DOWN TO THE ROCK LEVEL AND PRE-BORING MAY BE REQUIRED.
ROCK CLASSIFICATION IS BASED ON SAA SITE INVESTIGATION CODE AS1726-1981

DESIGN LOADS

THE MAXIMUM CALCULATED DESIGN ULTIMATE PILE AXIAL LOAD;

ABUTMENT A	=	-3200kN (TENSION)
	=	6600kN (COMPRESSION)
PIERS 1 TO 10	=	-550kN (TENSION)
	=	4500kN (COMPRESSION)
ABUTMENT B	=	-300kN (TENSION)
	=	4000kN (COMPRESSION)

MAXIMUM CALCULATED DESIGN ULTIMATE PILE MOMENT;

ABUTMENT A	=	1300kN m
PIERS 1 TO 10	=	950kN m
ABUTMENT B	=	1000kN m

THE LOADS/MOMENTS SPECIFIED HEREIN APPLY TO THE PILES AND PILE LAYOUT AS DESIGNED. CHANGES TO THE PILES AND THE PILE LAYOUT WHICH SIGNIFICANTLY ALTER THE BEHAVIOUR OF THE PILES INDIVIDUALLY OR AS A GROUP MAY ALTER THESE LOADS/MOMENTS OR THE BEHAVIOUR OF THE WHOLE STRUCTURE AND MAY NOT BE ACCEPTABLE.
THE CONTRACTOR SHALL VERIFY THE QUALITY OF THE FOUNDATION MATERIAL BY INSPECTIONS OF THE FOUNDATION MATERIAL FOR ALL PILES, IN ACCORDANCE WITH PART B58 OF THE SPECIFICATION.

GENERAL NOTES

SCALES AS SHOWN
MINIMUM 28 DAY COMPRESSIVE STRENGTH OF CONCRETE SHALL BE 40 MPa.
CONCRETE EXPOSURE CLASSIFICATION: B2
STEEL CASING SHALL CONFORM TO AS 3678 GRADE 250.
SETTING OUT OF PILES IS GIVEN AT SOFFIT LEVEL OF RELEVANT ABUTMENT HEADSTOCK OR PIER PILE CAP.
FREE STANDING PILES IN THE RIVER MAY REQUIRE TEMPORARY SUPPORT UNTIL THE PILE CAP IS CONSTRUCTED.
THE WELD CATEGORY SHALL BE GP IN ACCORDANCE WITH AS 1554 PART 1.
WELDING SYMBOLS ARE TO AS 1101 PART 3.

FIGURE 15. 4.1

ISSUE	DATE	REVISION	PREP	CHECK	AUTH
B	11.11.06	PERMANENT STEEL CASING PLATE THICKNESS REVISED AND SUGGESTED PROCEDURE NOTE DELETED	IRH	JC	

ROADS AND TRAFFIC AUTHORITY OF NSW

HIGHWAY No 10 — SHIRE OF GREAT LAKES

BRIDGE OVER KARUAH RIVER

AT KARUAH

PILE LAYOUT

RTA
PREPARED BY
BRIDGE ENGINEERING
110 GEORGE STREET
PARRAMATTA NSW 2150
PHONE (02) 8837-0805
FACSIMILE (02) 8837-0055

CLIENT
MAJOR PROJECTS OFFICE
47 DARBY STREET NEWCASTLE
PO BOX 469 NEWCASTLE NSW 2300
PHONE (02) 4924-0289
FACSIMILE (02) 4929-5271

PREPARED	CHECKED	REGISTRATION No OF PLANS	
DESIGN		0010 410 BC 2801	
DRAWING		RTA BRIDGE NUMBER	1234
		ISSUE STATUS: FOR CONSTRUCTION	
MANAGER, BRIDGE DESIGN PROJECTS		SHEET No 4	ISSUE B

CAD No KP2F1541.dgn

THIS DRAWING IS CONFIDENTIAL AND SHALL ONLY BE USED FOR THE PURPOSE OF THE NOMINATED PROJECT.

ROADS AND TRAFFIC AUTHORITY OF NSW

HIGHWAY No 17
NEWELL HIGHWAY

SHIRE OF URANA

BRIDGE OVER COLOMBO CREEK
AT 33.3km SOUTH OF NARRANDERA

DESIGN FILE: 5M2364
DESIGN STANDARD: AS 5100 - BRIDGE DESIGN
TRAFFIC LOADING:
NUMBER OF HEAVY VEHICLES PER LANE PER DAY: 1250
ROUTE FACTOR: 4
DESIGN TRAFFIC SPEED: 100 km PER HOUR
TRAFFIC BARRIER PERFORMANCE LEVEL: MEDIUM
EARTHQUAKE LOADING: AS 5100.2-2004
BRIDGE CLASSIFICATION: TYPE II
IMPORTANCE FACTOR: I = 1.25
ACCELERATION COEFFICIENT: a = 0.08
SITE FACTOR: s = 0.67
DESIGN CATEGORY: BEDC-1

B

WIND LOADING: AS 5100.2-2004
DESIGN WIND SPEED = 40m/s
WIND TERRAIN CATEGORY: 2
WIND REGION: A3
AVERAGE RECURRENCE INTERVAL ULS: R = 2000
AVERAGE RECURRENCE INTERVAL SLS: R = 20
NET PRESSURE COEFFICIENTS IN ACCORDANCE WITH D2 OF AS 1170.2

FLOOD DATA:
100 YEAR FLOW VELOCITY: 2.4m/s
2000 YEAR FLOW VELOCITY: 2.5m/s
100 YEAR FLOOD LEVEL: RL 19.5 (AHD)
2000 YEAR FLOOD LEVEL: RL 19.8 (AHD)

REFERENCE REPORTS
GEOTECHNICAL INVESTIGATION REPORT: GIR 0017/27
HYDRAULIC MODELLING AND WATERWAYS REQUIREMENTS REPORT: HWR 0017/27

SCHEDULE OF DRAWINGS

1 COVER SHEET
2 GENERAL ARRANGEMENT
3 CONSTRUCTION SEQUENCE
4 PILES AND PILE LAYOUT
5 ABUTMENTS CONCRETE
6 ABUTMENTS REINFORCEMENT
7 PIERS
8 7m SPAN PSC PLANK
9 DECK - SHEET A
10 DECK - SHEET B
11 DECK - SHEET C
12 DECK - SHEET D
13 TRAFFIC BARRIER RAILING - PANELS
14 TRAFFIC BARRIER RAILING - DETAILS
15 BAR SHAPES DIAGRAM

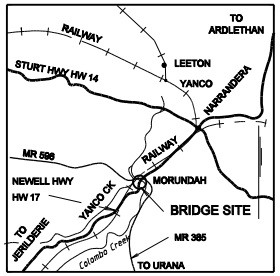

LOCALITY PLAN
THE BRIDGE SITE IS APPROXIMATELY 600kmBY ROAD FROM SYDNEY
0 10 20 30 40 50Km
10 5

RTA
PREPARED BY
BRIDGE ENGINEERING
110 GEORGE STREET
PARRAMATTA NSW 2150
PHONE (02) 8837-0802
FACSIMILE (02) 8837-0855

DESIGNED AND PRODUCED UNDER A QUALITY SYSTEM CERTIFIED AS COMPLYING WITH ISO/AS 9001 BY AN ACCREDITED CERTIFICATION BODY

FIGURE 15.4.2

ISSUE	DATE	REVISION	PREP	CHK	AUTH
B	12.10.06	WIND LOADING VALUES REVISED	IRH	MB	

REGISTRATION No OF PLANS	0017 453 BC 6538		
ISSUE STATUS: FOR CONSTRUCTION			
SHEET No 1	No OF SHEETS 15	ISSUE B	

CAD No: