PAVEMENT STANDARD DRAWINGS

TYPICAL PAVEMENT PROFILES

SHEET INDEX

DRAWING SHEET INDEX	
SHEET	DRAWING TITLE
01	COVER SHEET
02	REVISION REGISTER, PAVEMENT TYPES AND DESCRIPTIONS, AND ABBREVIATIONS
03	GUIDE NOTES ON HOW TO USE PAVEMENT PROFILES
04	STANDARD NOTES AND INFORMATION FOR INCLUSION ON PAVEMENT PROFILE DRAWINGS
05	FLEXIBLE PAVEMENT TYPES - SHEET 1
06	FLEXIBLE PAVEMENT TYPES - SHEET 2
07	RIGID PAVEMENT TYPES
08	BRIDGE DECK AND APPROACH SLAB, PAVEMENT TYPES

THIS DRAWING MAY BE PREPARED IN COLOUR AND MAY BE INCOMPLETE IF COPIED
0 5 10 15 20 25 30 35 40 45 50mm ON A3 SIZE ORIGINAL

PREPARED BY: PAVEMENTS AND GEOTECHNICAL UNIT
ENGINEERING SERVICES SECTION
TECHNICAL SERVICES BRANCH

A3

APPROVED FOR USE

DIRECTOR
PAVEMENTS AND
GEOTECHNICAL
SAMUEL HENWOOD

REGISTRATION No OF PLANS			SHEET No
DS2013/000067			01
ISSUE	DATE	REFERENCE No	No OF SHEETS
ED 2 REV 1	28/01/2021	P1461	08

© Transport for NSW

REVISION REGISTER

ED/REV	DATE	SHEET	AMENDMENT DESCRIPTION	AUTHORISED
1/0	18/02/2014	ALL	INITIAL ISSUE	PEPM&G *
1/1	17/10/2014	ALL	MINOR CHANGES	PEP&G **
1/2	13/05/2016	ALL	MINOR CHANGES	PEP&G **
2/0	03/04/2020	ALL	MAJOR CHANGES	DP&G ***
2/1	28/01/2021	ALL	MINOR CHANGES	DP&G ***

* PRINCIPAL ENGINEER, PAVEMENTS, MATERIALS AND GEOTECHNICAL
** PRINCIPAL ENGINEER, PAVEMENTS AND GEOTECHNICAL
*** DIRECTOR, PAVEMENTS AND GEOTECHNICAL

TABLE 2.1: PAVEMENT DESCRIPTIONS

DESCRIPTION	SHEET No
FULL DEPTH ASPHALT	05
THICK ASPHALT OVER HEAVILY BOUND SUBBASE	05
THICK ASPHALT OVER LEAN-MIX CONCRETE SUBBASE	05
FULL DEPTH ASPHALT WITH OPEN GRADED ASPHALT WEARING COURSE	05
THICK ASPHALT OVER HEAVILY BOUND SUBBASE WITH OPEN GRADED ASPHALT WEARING COURSE	05
THICK ASPHALT OVER LEAN-MIX CONCRETE SUBBASE WITH OPEN GRADED ASPHALT WEARING COURSE	05
FULL DEPTH ASPHALT WITH STONE MASTIC ASPHALT WEARING COURSE	05
THICK ASPHALT OVER HEAVILY BOUND SUBBASE WITH STONE MASTIC ASPHALT WEARING COURSE	05
THICK ASPHALT OVER LEAN-MIX CONCRETE SUBBASE WITH STONE MASTIC ASPHALT WEARING COURSE	06
ASPHALT OVER HEAVILY BOUND SUBBASE (TEMPORARY PAVEMENT)	06
THICK ASPHALT OVER GRANULAR SUBBASE	06
GRANULAR BASE WITH ASPHALT WEARING COURSE	06
GRANULAR BASE WITH SPRAYED SEAL	06
PLAIN CONCRETE	07
CONTINUOUSLY REINFORCED CONCRETE	07
CONTINUOUSLY REINFORCED CONCRETE WITH OPEN GRADED ASPHALT WEARING COURSE	07
CONTINUOUSLY REINFORCED CONCRETE WITH STONE MASTIC ASPHALT WEARING COURSE	07
JOINTED REINFORCED CONCRETE	07
STEEL FIBRE REINFORCED CONCRETE	07
BRIDGE DECK OR APPROACH SLAB WITH ASPHALT WEARING COURSE	08
BRIDGE DECK OR APPROACH SLAB WITH OPEN GRADED ASPHALT WEARING COURSE	08
BRIDGE DECK OR APPROACH SLAB WITH STONE MASTIC ASPHALT WEARING COURSE	08

TABLE 2.2: ABBREVIATIONS

ABBREVIATION	DESCRIPTION
AC14	DENSE GRADED ASPHALT (NOMINAL SIZE 14 mm)
AC20	DENSE GRADED ASPHALT (NOMINAL SIZE 20 mm)
CRCP	CONTINUOUSLY REINFORCED CONCRETE PAVEMENT
DGA	DENSE GRADED ASPHALT
ESA	EQUIVALENT STANDARD AXLES
JRCP	JOINTED REINFORCED CONCRETE PAVEMENT
OGA	OPEN GRADED ASPHALT
PCP	PLAIN CONCRETE PAVEMENT
PTXX	PAVEMENT TYPE
QDP	QUICK DRY PRIME
SBWM	SPRAYED BITUMINOUS WATERPROOF MEMBRANE
SFCP	STEEL FIBRE REINFORCED CONCRETE PAVEMENT
SMA	STONE MASTIC ASPHALT
SMZ	SELECTED MATERIAL ZONE
UZF	UPPER ZONE OF FORMATION
UZF OTS	UPPER ZONE OF FORMATION OTHER THAN SELECTED MATERIAL

THIS DRAWING MAY BE PREPARED IN COLOUR AND MAY BE INCOMPLETE IF COPIED
0 5 10 15 20 25 30 35 40 45 50mm ON A3 SIZE ORIGINAL

SCALES: NOT TO SCALE, OR AS NOTED. | A3 ORIGINAL

PREPARED BY: PAVEMENTS AND GEOTECHNICAL UNIT
ENGINEERING SERVICES SECTION
TECHNICAL SERVICES BRANCH

APPROVED FOR USE

DIRECTOR
PAVEMENTS AND GEOTECHNICAL
SAMUEL HENWOOD

NSW GOVERNMENT | Transport for NSW

PAVEMENT STANDARD DRAWINGS
TYPICAL PAVEMENT PROFILES
REVISION REGISTER,
PAVEMENT TYPES AND DESCRIPTIONS,
AND ABBREVIATIONS

REGISTRATION No OF PLANS			SHEET No
DS2013/000067			02
ISSUE	DATE	REFERENCE No	No OF SHEETS
ED 2 REV 1	28/01/2021	P1461	08

© Transport for NSW

GUIDE NOTES ON HOW TO USE PAVEMENT PROFILE DRAWINGS

GENERAL

1. NOTES IN THIS SHEET PROVIDE INFORMATION AND GUIDANCE ON HOW TO USE THE PAVEMENT PROFILE DRAWINGS. DEFINITIONS OF TERMS USED IN THE DRAWINGS ARE LISTED IN TABLE 4.1.
2. PAVEMENT PROFILES INCLUDED IN THE DRAWING SET ARE TYPICAL HEAVY DUTY PAVEMENTS USED IN NSW. TYPICAL DETAILS OF WEARING SURFACES FOR BRIDGE DECKS AND APPROACH SLABS AS WELL AS TEMPORARY PAVEMENTS ARE ALSO INCLUDED.
3. THESE PROFILES ARE NOT INTENDED FOR USE IN TUNNELS AND MAY NOT BE APPLICABLE FOR LIGHTLY TRAFFICKED ROADS.
4. THE DRAWING SET IS EXPECTED TO:
   a. ASSIST DESIGNERS IN PREPARING PROJECT SPECIFIC DETAILS.
   b. HARMONISE PROFILES, DETAILS AND NOTES.
   c. MINIMISE THE VARIATION IN DRAWINGS BETWEEN PROJECTS.
   d. MINIMISE THE WORK REQUIRED IN PREPARING AND CHECKING THE PROJECT SPECIFIC DRAWINGS.
5. DESIGNERS SHOULD CONFIRM THEY ARE USING THE LATEST VERSION OF THE DRAWING SET. THE LATEST VERSION OF THE DRAWING SET CAN BE DOWNLOADED FROM THE TRANSPORT FOR NSW WEBSITE.
6. THE DRAWING SET SHOULD BE USED IN CONJUNCTION WITH RELEVANT TRANSPORT FOR NSW SPECIFICATIONS AND GUIDELINES.
7. THE THICKNESS OF EACH PAVEMENT COURSE IS TO BE SHOWN IN mm ADJACENT TO THE RESPECTIVE COURSE FOR EACH PAVEMENT PROFILE. THE THICKNESS IS TO INCLUDE RELEVANT CONSTRUCTION TOLERANCES. INCLUDE NOTE 5 FROM TABLE 4.2 ON EACH PROFILE SHEET. REPLACE 'x' ON EACH PROFILE WITH THE DESIGN COURSE THICKNESS IN mm.
8. PAVEMENT TAGS, PATTERNS, COLOURS AND NAMES MAY BE MODIFIED TO SUIT PROJECT REQUIREMENTS. USE A UNIQUE PATTERN COLOUR AND TAG FOR EACH MATERIAL AND PAVEMENT PROFILE CONSISTENTLY THROUGHOUT THE DRAWING SET.
9. MATERIAL DESIGNATION IS TO BE SHOWN ADJACENT TO THE PAVEMENT COURSE ON THE PROFILES WITH ANY PROJECT SPECIFIC SPECIFICATION REQUIREMENTS IN PARENTHESIS, FOR EXAMPLE AC14 (A15E), DGB20 CLASS 1 BASE.
10. A MICROSTATION CAD PACKAGE CONTAINING ALL PATTERNS AND COLOURS USED IN THE STANDARD DRAWINGS IS AVAILABLE FROM TRANSPORT FOR NSW PAVEMENTS UNIT.
11. IN ADDITION TO THESE DRAWINGS, OTHER TRANSPORT FOR NSW STANDARD DRAWING SETS MAY APPLY. IF INCONSISTENCIES ARE ENCOUNTERED, CONTACT THE PAVEMENTS UNIT.
12. A PROJECT SPECIFIC SCHEDULE OF WORKS AND TECHNICAL CRITERIA (SWTC) OR PROJECT BRIEF TAKES PRECEDENCE OVER THE REQUIREMENTS OF THIS DRAWING SET.
13. NOT ALL TACKCOATS, CURING COMPOUNDS AND DEBONDING TREATMENTS ARE SHOWN ON THESE DRAWINGS. ADD NOTE 1 FROM TABLE 4.2 TO ALL PROFILE DRAWING SHEETS.
14. THE UNITS OF MEASURE FOR USE ON PAVEMENT PROFILE DRAWINGS ARE SHOWN IN TABLE 4.3.

ASPHALT

1. EACH ASPHALT COURSE THICKNESS MUST BE SHOWN.
2. EACH COURSE MUST CONSIST OF ONE ASPHALT TYPE AND SIZE. COURSES ARE DEFINED AS:
   a. WEARING COURSE: ASPHALT LAYER COMPRISING DGA, SMA OR OGA THAT VEHICLE TYRES ARE IN CONTACT WITH.
   b. INTERMEDIATE COURSE: ASPHALT LAYERS BELOW THE WEARING COURSE COMPRISING DGA OR EME2.
   c. CORRECTIVE COURSE: VARIABLE THICKNESS ASPHALT LAYER COMPRISING DGA.
3. EACH COURSE THICKNESS MUST COMPRISE ONE OR MORE LAYERS, EACH OF WHICH COMPLY WITH THE THICKNESS LIMITS IN TABLE 4.4.
4. FOR EACH ASPHALT COURSE, REPLACE (NOMINAL SIZE) IN ACCORDANCE WITH CONSTRUCTION SPECIFICATION AND/OR SWTC REQUIREMENTS.
5. FOR EACH ASPHALT COURSE REPLACE (BINDER TYPE) IN ACCORDANCE WITH CONSTRUCTION AND/OR SWTC REQUIREMENT AND THE TYPE USED IN DETERMINING THE ASPHALT MODULUS DESIGN VALUE E.G. AC14 (A15E) WEARING COURSE OR AC20 (C450) INTERMEDIATE COURSE. INCLUDE NOTE 11 FROM TABLE 4.2 ON THE PROFILE DRAWING SHEET.
6. LIGHT DUTY DENSE GRADED ASPHALT CONSTRUCTED IN ACCORDANCE WITH R117 IS TO BE DESIGNATED AS AC(NOMINAL SIZE) (BINDER TYPE) LIGHT DUTY.
7. ONLY DENSE GRADED ASPHALT, EME2 AND STONE MASTIC ASPHALT LAYERS ARE INCLUDED IN THE 175 mm MINIMUM ASPHALT THICKNESSES OVER LEAN-MIX CONCRETE OR HEAVILY BOUND MATERIAL. SPRAYED SEALS AND OPEN GRADED ASPHALT WEARING COURSES ARE NOT CONSIDERED AS CONTRIBUTING TO THE 175 mm MINIMUM THICKNESS.
8. FOR CONSISTENCY WITH TRANSPORT FOR NSW CONSTRUCTION SPECIFICATIONS THE TERMS INTERMEDIATE COURSE AND CORRECTIVE COURSE ARE USED IN PLACE OF BASE COURSE ASPHALT.
9. CORRECTIVE COURSES ARE TO BE DESCRIBED IN THE SAME MANNER AS INTERMEDIATE COURSES. THE NOMINATION OF DGA NOMINAL SIZE IS TO BE SELECTED CONSIDERING LAYER THICKNESS RULES. WHERE A THICKNESS BELOW THE MINIMUM LAYER THICKNESS IS REQUIRED THEN THE CORRECTIVE COURSE IS TO BE CHASED IN WITH A MILLING OPERATION.
10. THE WEARING COURSE SYSTEM SHOWN ON CRCP PROFILES IS APPROPRIATE FOR MAXIMUM WATERPROOFING, ADHESION, STAGED TRAFFICKING AND FUTURE RESURFACING WORK. DEPENDING ON THE CONSTRUCTION SEQUENCE, TRAFFICKING AND DESIGN THICKNESS ALLOWANCE MADE FOR MILLING FOR FUTURE RESURFACING SOME OR ALL ASPECTS OF THIS SYSTEM ARE REQUIRED AS FOLLOWS:
    a. THE DGA CORRECTIVE COURSE IS REQUIRED WHERE THE BASE THICKNESS WAS NOT INCREASED TO ALLOW FOR FUTURE MILLING TO REPLACE THE ASPHALTIC WEARING COURSE AND CAN BE OMITTED FROM THE SYSTEM IF IN ADDITION TO THE CONSTRUCTION TOLERANCE AN ADDITIONAL 10 mm THICKNESS WAS ADDED TO ALLOW FOR FUTURE MILLING TO REPLACE THE WEARING COURSE.
    b. THE LOW CUTTER SEAL IS REQUIRED WHERE AN OGA SURFACE IS PROVIDED.
    c. THE LOW CUTTER SEAL IS REQUIRED WHERE THE CRCP IS TO BE TRAFFICKED (DURING OR AFTER CONSTRUCTION) BEFORE PLACING THE DGA, SMA OR OGA.
    d. THE QDP IS NOT REQUIRED WHERE A BITUMINOUS CURING COMPOUND WAS APPLIED AND REMAINS IN TACT AT THE TIME OF PLACING THE WEARING COURSE.

    NOTE 10 IN TABLE 4.2 IS TO BE ADDED TO THE PAVEMENT PROFILE DRAWING.

GRANULAR

1. FOR EACH GRANULAR BASE MATERIAL COURSE NOMINATE THE SIZE AND CLASS IN ACCORDANCE WITH MATERIAL SPECIFICATION 3051 FOR EXAMPLE DGB20 CLASS 1 BASE.
2. FOR EACH GRANULAR SUBBASE MATERIAL COURSE NOMINATE THE SIZE AND TRAFFIC CATEGORY IN ACCORDANCE WITH MATERIAL SPECIFICATION 3051 FOR EXAMPLE DGS20 (TRAFFIC CATEGORY B) SUBBASE.
3. AS PER R71, EACH COURSE THICKNESS IS TO COMPRISE COMPACTED LAYERS THAT ARE NOT MORE THAN 150 mm OR LESS THAN 100 mm THICK (A SPECIFIED COURSE THICKNESS OF 150 mm - 200 mm DOES NOT COMPLY WITH R71 CONSTRUCTION REQUIREMENTS).

SPRAYED SEAL

1. FOR EACH SPRAYED SEAL NOMINATE THE NOMINAL SEAL SIZE AND BINDER TYPE IN ACCORDANCE WITH CONSTRUCTION SPECIFICATIONS AND/OR SITE REQUIREMENTS. FOR EXAMPLE 14 mm SPRAYED SEAL (C240).
2. FOR PAVEMENT DESIGN PURPOSES THE SEAL THICKNESS IS NOT TO BE INCLUDED IN THE STRUCTURAL PAVEMENT THICKNESS DURING PAVEMENT CAPACITY ANALYSIS BUT THE SEAL THICKNESS IS TO BE SHOWN ON THE PAVEMENT PROFILE DRAWINGS AND NOTE 2 FROM TABLE 4.2. IS TO BE INCLUDED ON THE PAVEMENT PROFILE DRAWING SHEET.
3. FOR EACH SPRAYED SEAL SHOW THE THICKNESS LISTED IN TABLE 4.5 WHICH IS DETERMINED BASED ON AVERAGE LEAST DIMENSION (ALD) OF SEALING AGGREGATE.

LOW CUTTER SEAL

1. A LOW CUTTER SEAL IS TO BE PROVIDED AT ALL LOCATIONS WHERE A SPRAYED SEAL IS TO BE PLACED DIRECTLY UNDER AN ASPHALT LAYER. THE LOW CUTER SEAL DESIGN REQUIREMENTS ARE INCLUDED IN R82 WHEN PLACED ON LMC AND FOR OTHER APPLICATIONS INCLUDED IN THE TRANSPORT FOR NSW SUPPLEMENT TO AUSTROADS GUIDE TO PAVEMENT TECHNOLOGY, PART 2: PAVEMENT STRUCTURAL DESIGN. NOTE 8 FROM TABLE 4.2 IS TO BE INCLUDED ON THE PAVEMENT PROFILE DRAWING SHEET.
2. NOMINATE THE NOMINAL SEAL SIZE TYPICALLY A 7 mm LOW CUTTER SEAL (C240).
3. WHERE THERE IS LIMITED CURING TIME FOR A SPRAYED SEAL UNDER A BOUND LAYER (LMC OR HBSB), A PRIMER SEAL IS PREFERRED TO ASSIST IN ADHESION AND TO PREVENT PICK UP ON THE BOUND MATERIAL PAVING EQUIPMENT WHEELS. NOTE 7 FROM TABLE 4.2 IS TO BE INCLUDED ON THE PAVEMENT PROFILE DRAWING SHEET.
4. THE SPRAYED SEAL NOMINATED ON THE SMZ IS REQUIRED TO PROTECT THE SMZ FROM RAIN AND CONSTRUCTION TRAFFIC DURING CONSTRUCTION AND ADDITIONALLY IT ACTS AS A CURING MEMBRANE WHERE A CEMENTITIOUSLY BOUND COURSE (LMC OR HBSB) IS PLACED ABOVE. WHERE THE COURSE DIRECTLY ABOVE IT IS AN UNBOUND GRANULAR MATERIAL AND THE RISK OF WET WEATHER IS LOW AND CONSTRUCTION TRAFFIC IS RESTRICTED THEN THE SPRAYED SEAL CAN BE OMITTED WHICH IS BENEFICIAL FROM A PAVEMENT DRAINAGE PERSPECTIVE, INCLUDE THE SPRAYED SEAL ON THE PAVEMENT PROFILE DRAWINGS AND ADD NOTE 9 FROM TABLE 4.2 TO THE PAVEMENT PROFILE DRAWINGS.

BRIDGE DECK WATERPROOFING AND PROTECTION

1. BEFORE PLACING ASPHALT ON A BRIDGE DECK, A SYSTEM TO PROTECT THE DECK IS TO BE PROVIDED. THE SYSTEM CONSISTS OF A QUICK DRY PRIME (QDP), SPRAYED BITUMINOUS WATERPROOF MEMBRANE (SBWM) AND AN ASPHALT CORRECTIVE COURSE. APPLY SBWM AND QDP IN ACCORDANCE WITH THE REQUIREMENTS OF B344.
2. REFER TO B344 ANNEXURE E FOR ASPHALT LAYER THICKNESS REQUIREMENTS ON BRIDGES.
   TYPICALLY A DGA10 CORRECTIVE COURSE IS USED, DGA7 CAN BE USED AS A REMEDIAL MEASURE WHERE BRIDGE DECKS ARE FINISHED ABOVE DESIGN LEVEL.

EARTHWORKS

1. WHERE A COMPREHENSIVE SUBGRADE INVESTIGATION HAS NOT BEEN UNDERTAKEN OR THERE IS LIMITED TRAFFIC DATA OR THE UZF OTS IS STABILISED BUT NOT DESIGNED AND SPECIFIED TO BE PERMANENT IN NATURE (SUCH AS A LIME STABILISED SUBGRADE IS PROVIDED PRIMARILY FOR CONSTRUCTABILITY PURPOSES WITHOUT MIX DESIGN MEETING LIME DEMAND TEST), THE PAVEMENT DESIGN IS TO BE BASED ON THE STRENGTH OF AN SMZ LAYER OVER AN INFINITE SUBGRADE (UZF OTS IS PROVIDED FOR CONSTRUCTION PURPOSES ONLY IN ACCORDANCE WITH R44 AND IS NOT MODELLED BUT MUST STILL BE CONSTRUCTED):
   a. SHOW THE SMZ LAYER ON THE PAVEMENT PROFILE.
   b. ADD NOTE 3 AND 6 FROM TABLE 4.2.
   c. ENSURE THAT THE STRENGTH OF THE DESIGN SUBGRADE USED IN PAVEMENT DESIGN DOES NOT EXCEED THE STRENGTH OF THE IN-SITU SUBGRADE MATERIAL AND GENERAL FILL MATERIAL AVAILABLE (BOTH SITE WON AND IMPORTED).
   d. THE DEFAULT CBR 8% REQUIREMENT IN R44 FOR UZF OTS AND FOR MATERIAL IN FLOOR OF CUTTING STILL APPLIES AND MUST NOT BE CHANGED IN R44 TO THE DESIGN SUBGRADE VALUE USED IN PAVEMENT DESIGN. THE ONLY TIME THAT A VALUE LESS THAN 8% CBR CAN BE ACCEPTED IN R44 IS WHEN THERE IS NO CUT MATERIAL AVAILABLE TO BE WON FROM SITE WITH CBR >8%. IN THIS CASE A LOWER CBR MAY BE CONSIDERED TO ALLOW UTILISATION OF SITE WON MATERIAL BUT MUST NOT BE LESS THAN CBR 5%. WHERE AN EXTENSIVE GEOTECHNICAL INVESTIGATION HAS NOT BEEN UNDERTAKEN THEN RETAIN THE DEFAULT R44 REQUIREMENT OF CBR 8% FOR UZF OTS, FLOOR OF CUTS AND SHALLOW EMBANKMENTS. WHERE SITE WON MATERIAL WITH CBR > 5% IS NOT AVAILABLE THEN THE IMPORTED MATERIAL OR SITE WON IMPROVED MATERIAL IS TO HAVE CBR >8% AND R44 IS TO RETAIN THE DEFAULT 8% REQUIREMENT.
   e. WHERE STABILISATION IS USED TO IMPROVE SITE WON MATERIALS, UNDERTAKE MIX DESIGNS TO DETERMINE THE BINDER TYPE AND APPLICATION RATE REQUIRED TO IMPROVE THE MATERIAL TO HAVE CBR>8% AND SUCH THAT THE OTHER R44 REQUIREMENTS (SUCH AS DEFLECTION) ARE SATISFIED DURING CONSTRUCTION.
2. WHERE A COMPREHENSIVE SUBGRADE INVESTIGATION AND TRAFFIC ANALYSIS HAS BEEN CONDUCTED, THE PAVEMENT DESIGN MAY BE BASED ON BOTH THE STRENGTH OF THE SMZ LAYER AND THE UZF OTS LAYER (UZF OTS HAS BEEN MODELLED IN PAVEMENT STRUCTURAL DESIGN):
   a. SHOW THE SMZ LAYER ON THE PAVEMENT PROFILE.
   b. ADD NOTE 3 AND 6 FROM TABLE 4.2.
   c. MAKE R44 PROJECT SPECIFIC SUCH THAT THE UZF OTS, FLOOR OF CUTTING AND MATERIAL IN SHALLOW EMBANKMENTS HAVE CBR LIMITS THAT ARE NOT LESS THAN THAT CORRESPONDING TO THE DESIGN ASSUMPTIONS. REGARDLESS OF THE VALUE USED IN PAVEMENT DESIGN THE ONLY TIME THAT A VALUE LESS THAN 8% CBR CAN BE ACCEPTED IN R44 IS WHEN THERE IS NO CUT MATERIAL AVAILABLE TO BE WON FROM SITE WITH CBR >8%. IN THIS CASE A LOWER CBR MAY BE CONSIDERED TO ALLOW UTILISATION OF SITE WON MATERIAL BUT MUST NOT BE LESS THAN CBR 5%. WHERE SITE WON MATERIAL WITH CBR > 5% IS NOT AVAILABLE THEN THE IMPORTED MATERIAL OR SITE WON IMPROVED MATERIAL IS TO HAVE CBR >8%.
   d. WHERE STABILISATION IS USED TO IMPROVE SITE WON MATERIALS, UNDERTAKE MIX DESIGNS TO DETERMINE THE BINDER TYPE AND APPLICATION RATE REQUIRED TO IMPROVE THE MATERIAL TO HAVE CBR>8% AND SUCH THAT THE OTHER R44 REQUIREMENTS (SUCH AS DEFLECTION) ARE SATISFIED DURING CONSTRUCTION AND ADDITIONALLY FOR LIME STABILISED MATERIALS THAT THE LIME DEMAND TEST IS SATISFIED.
3. WHERE A PAVEMENT DESIGN IS BASED ON A SPECIFIC SUBGRADE TREATMENT DESIGN BELOW THE SMZ:
   a. SHOW THE SMZ LAYER ON THE PAVEMENT PROFILE.
   b. SHOW THE REQUIRED SUBGRADE TREATMENTS BELOW THE SMZ AND THE MINIMUM REQUIREMENTS OF THE TREATMENT. FOR EXAMPLE WHERE A CONTROLLED SUBGRADE IS NOMINATED INCLUDE THE MIX DESIGN ALREADY DETERMINED (BINDER TYPE, BINDER %) OR WHERE THE MIX DESIGN IS YET TO BE DETERMINED INCLUDE DESIGN REQUIREMENTS TO BE SATISFIED BY THE MIX DESIGN (% CBR REQUIREMENT, UCS REQUIREMENT, WORKING TIME, LIME DEMAND TEST ETC).
   c. ADD NOTE 3 AND 4 FROM TABLE 4.2.
   d. MAKE R44 PROJECT SPECIFIC TO SUIT PROJECT REQUIREMENTS.

SUBGRADE DESIGN VALUE

1. DO NOT SHOW THE SUBGRADE DESIGN VALUE USED IN THE PAVEMENT STRUCTURAL DESIGN ON THE PAVEMENT PROFILE DRAWINGS OR NOTES.
2. THE SUBGRADE DESIGN VALUE USED IN THE PAVEMENT STRUCTURE DESIGN MUST BE INCLUDED IN THE DESIGN REPORT TOGETHER WITH AN EXPLANATION TO SUPPORT ITS DERIVATION.

SPECIFICATIONS

1. ALL CONSTRUCTION IS TO BE IN ACCORDANCE WITH THE RELEVANT TRANSPORT FOR NSW SPECIFICATIONS.

MINIMUM LENGTH OF PAVEMENT PROFILE APPLICATION

1. FOR CONSTRUCTION EFFICIENCIES SHORT LENGTHS OF DIFFERENT PAVEMENT PROFILES ARE NOT ACCEPTABLE. TYPICALLY A MINIMUM LENGTH OF 500 m IS REQUIRED EXCEPT WHERE SPECIFIC SITE CONSTRAINTS EXIST SUCH AS; INTERSECTIONS WITH TRAFFIC CONSTRAINTS DUE TO ROAD OCCUPANCY LICENCE LIMITATIONS; UNMOVABLE UTILITIES; SITES SHORTER THAN 500 m.

THIS DRAWING MAY BE PREPARED IN COLOUR AND MAY BE INCOMPLETE IF COPIED
0 5 10 15 20 25 30 35 40 45 50mm ON A3 SIZE ORIGINAL

SCALES: NOT TO SCALE, OR AS NOTED.	A3 ORIGINAL	PREPARED BY: PAVEMENTS AND GEOTECHNICAL UNIT ENGINEERING SERVICES SECTION TECHNICAL SERVICES BRANCH APPROVED FOR USE DIRECTOR PAVEMENTS AND GEOTECHNICAL — SAMUEL HENWOOD	NSW GOVERNMENT Transport for NSW	PAVEMENT STANDARD DRAWINGS TYPICAL PAVEMENT PROFILES GUIDE NOTES ON HOW TO USE PAVEMENT PROFILES	REGISTRATION No OF PLANS DS2013/000067		SHEET No 03
					ISSUE ED 2 REV 1	DATE 28/01/2021	REFERENCE No P1461	No OF SHEETS 08

© Transport for NSW

TABLE 4.1: DEFINITIONS

PARAMETER	DEFINITION
COURSE	ONE OR MORE LAYERS OF THE SAME MATERIAL FORMING PART OF A PAVEMENT STRUCTURE.
DESIGNER	ANYONE WHO UNDERSTANDS AND APPLIES THE PRINCIPLES OF THE AUSTROADS GUIDE TO PAVEMENT TECHNOLOGY, PART 2: PAVEMENT STRUCTURAL DESIGN, AND TRANSPORT FOR NSW SUPPLEMENTS AND WHO DECIDES VARIOUS PARAMETERS STIPULATED IN THE DRAWING SET.
HEAVY DUTY PAVEMENTS	ROADS WITH DESIGN TRAFFIC LOADING OF 1×10^7 ESA OR GREATER IN THE DESIGN LANE FOR THE FIRST 20 YEARS OF SERVICE.
LAYER	THE TERM USED TO DESCRIBE THE PORTION OF A PAVEMENT COURSE THAT IS PLACED AND COMPACTED AS AN ENTITY.
LOW CUTTER SEAL	SPRAYED SEAL DESIGNED TO BE PLACED UNDERNEATH AN ASPHALT COURSE WITH LOW CUTTER CONTENT. USUALLY A 7 mm OR 10 mm NOMINAL SIZE AGGREGATE IS USED.
PROJECT SPECIFIC	ANY DETAILS UNIQUE TO AN INDIVIDUAL PROJECT. THESE MAY VARY FROM PROJECT TO PROJECT AND/OR COMPRISE PARAMETERS SPECIFIED BY A PROJECT'S SPECIFICATION OR CONTRACT.
TEMPORARY PAVEMENT	TYPICAL PURPOSE OF THESE PAVEMENTS IS TRAFFIC MANAGEMENT DURING CONSTRUCTION, THOUGH IT CAN ALSO BE USED AS AN INTERIM SOLUTION TO A FUTURE UPGRADE. THEY ARE TYPICALLY DESIGNED FOR FIVE YEARS OR LONGER IF REQUIRED. TEMPORARY PAVEMENTS MAY EVENTUALLY BECOME A LOCAL OR SERVICE ROAD (SUCH PAVEMENTS NEED TO BE DESIGNED FOR LONGER PERIODS AS REQUIRED), OR BE ABANDONED AFTER RECLAIMING MATERIALS.
THICK ASPHALT	ASPHALT COURSE WHICH HAS A TYPICAL THICKNESSES RANGE OF 100 mm TO 225 mm. HOWEVER WHEN PLACED OVER LEAN-MIX CONCRETE OR BOUND MATERIAL, THE MINIMUM THICKNESS IS 175 mm.

TABLE 4.2 STANDARD NOTES TO BE INCLUDED IN THE PAVEMENT PROFILE DRAWINGS (AS REQUIRED)

NOTES TO BE INCLUDED ON PAVEMENT PROFILE DRAWINGS (AS DIRECTED IN THE GUIDE NOTES ON SHEET 3.)
1. TACKCOATS, DEBONDING TREATMENTS AND CURING COMPOUNDS ARE NOT SHOWN. HOWEVER ALL TACKCOATS, DEBONDING TREATMENTS AND CURING COMPOUNDS MUST BE CONSTRUCTED IN ACCORDANCE WITH RELEVANT CONSTRUCTION SPECIFICATIONS.
2. SPRAYED SEAL THICKNESS IS DETERMINED BASED ON THE AVERAGE LEAST DIMENSION (ALD) OF THE NOMINAL SEAL SIZE. IT IS EXCLUDED FROM THE ASSESSMENT OF PAVEMENT COURSE THICKNESS REQUIREMENTS BUT IT IS TO BE CONSIDERED FOR LEVELING PURPOSES. A SPRAYED SEAL MUST BE CONSTRUCTED AS A SEPARATE LAYER.
3. EARTHWORKS TO BE CONSTRUCTED IN ACCORDANCE WITH THE REQUIREMENTS OF R44.
4. ANY EARTHWORKS TREATMENT SHOWN ON THE PAVEMENT PROFILE MUST BE CONSTRUCTED.
5. ALL THICKNESSES ARE IN MILLIMETERS.
6. THE SUBGRADE AS SHOWN ON PAVEMENT PROFILES CONSIST OF; IN FILLS - THE UFZ OTS AND ANY EMBANKMENT MATERIAL R44 FOUNDATION TREATMENT AND/OR INSITU MATERIAL BELOW. IN CUTS - THE R44 FOUNDATION TREATMENT AND THE INSITU MATERIAL BELOW. IN TRANSITION ZONES AND SHALLOW EMBANKMENTS – THE UZF OTS AND THE INSITU MATERIAL BELOW.
7. SPRAYED SEALS MUST BE ADEQUATELY CURED TO PREVENT PICK UP OF THE SEAL DURING THE PLACEMENT OF SUBSEQUENT WORK.
8. LOW CUTTER SEALS PLACED ON LMC MUST COMPLY WITH THE REQUIREMENTS OF R82 AND FOR OTHER APPLICATIONS MUST COMPLY WITH THE REQUIREMENTS OF THE TRANSPORT FOR NSW SUPPLEMENT TO AGPT PT2.
9. WHERE THE COURSE DIRECTLY ABOVE THE SPRAYED SEAL PLACED ON THE SMZ IS A GRANULAR MATERIAL AND THE RISK OF WET WEATHER IS LOW AND CONSTRUCTION TRAFFIC IS RESTRICTED THEN THE SPRAYED SEAL CAN BE OMITTED WHICH IS BENEFICIAL FROM A PAVEMENT DRAINAGE PERSPECTIVE.
10. WHERE A DGA CORRECTIVE COURSE, LOW CUTTER SEAL OR QDP IS SHOWN ON THE CRCP PAVEMENT PROFILE; a) THE QDP IS REQUIRED WHERE A BITUMINOUS CURING COMPOUND WAS NOT APPLIED OR IS NO LONGER IN TACT AT THE TIME OF PLACING THE WEARING COURSE. b) THE LOW CUTTER SEAL IS REQUIRED WHERE THE CRCP IS TO BE TRAFFICKED (DURING OR AFTER CONSTRUCTION) BEFORE PLACING THE DGA, SMA OR OGA. c) THE LOW CUTTER SEAL IS REQUIRED WHERE AN OGA WEARING SURFACE IS PROVIDED.
11. ALL ASPHALT LAYERS NOMINATED AS AC ARE TO BE CONSTRUCTED IN ACCORDANCE WITH R116 UNLESS DESIGNATED AS LIGHT DUTY.

TABLE 4.3: UNITS OF MEASUREMENT

PARAMETER	MEASUREMENT UNIT
COURSE/LAYER THICKNESS	mm
BITUMEN AND EMULSION SPRAY RATES	L/m^2
AGGREGATE SPREAD RATES	m^2/m^3

TABLE 4.4: ALLOWABLE ASPHALT LAYER THICKNESS

ASPHALT TYPE	ALLOWABLE ASPHALT LAYER THICKNESS (mm) FOR DIFFERENT NOMINAL ASPHALT SIZE				
	5 mm	7 mm	10 mm	14 mm	20 mm
DENSE GRADED ASPHALT	15 - 25	21 - 35	30 - 50	42 - 70	60 - 100
STONE MASTIC ASPHALT	-	-	30 - 50	42 - 70	-
OPEN GRADED ASPHALT	-	-	25 - 40	35 - 56	-
HIGH MODULUS ASPHALT (EME2)	-	-	-	70 - 130	-

TABLE 4.5: SPRAYED SEAL THICKNESS FOR VARIOUS NOMINAL SEAL SIZES

NOMINAL SEAL SIZE	SEAL THICKNESS
7 mm	4 mm
10 mm	6 mm
14 mm	8 mm

THIS DRAWING MAY BE PREPARED IN COLOUR AND MAY BE INCOMPLETE IF COPIED
50mm ON A3 SIZE ORIGINAL

SCALES: NOT TO SCALE, OR AS NOTED. | A3 ORIGINAL

PREPARED BY: PAVEMENTS AND GEOTECHNICAL UNIT
ENGINEERING SERVICES SECTION
TECHNICAL SERVICES BRANCH

APPROVED FOR USE

DIRECTOR
PAVEMENTS AND GEOTECHNICAL
SAMUEL HENWOOD

NSW GOVERNMENT | Transport for NSW

PAVEMENT STANDARD DRAWINGS
TYPICAL PAVEMENT PROFILES
STANDARD NOTES AND INFORMATION FOR INCLUSION
ON PAVEMENT PROFILE DRAWINGS

REGISTRATION No OF PLANS			SHEET No
DS2013/000067			04
ISSUE	DATE	REFERENCE No	No OF SHEETS
ED 2 REV 1	28/01/2021	P1461	08

© Transport for NSW

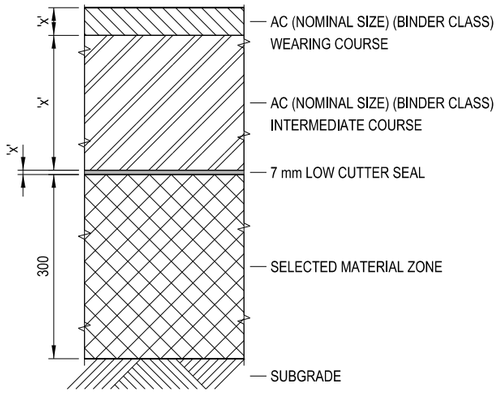

FULL DEPTH ASPHALT

PTXX

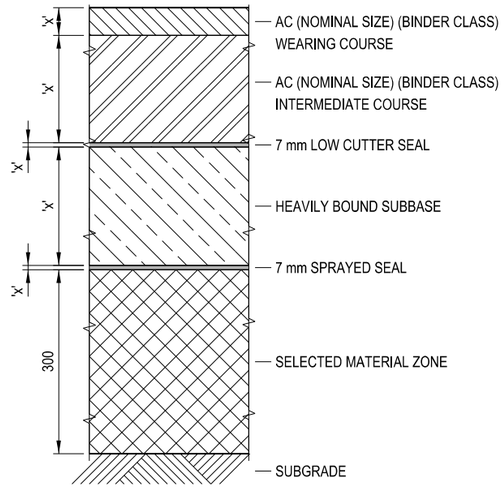

THICK ASPHALT OVER
HEAVILY BOUND SUBBASE

PTXX

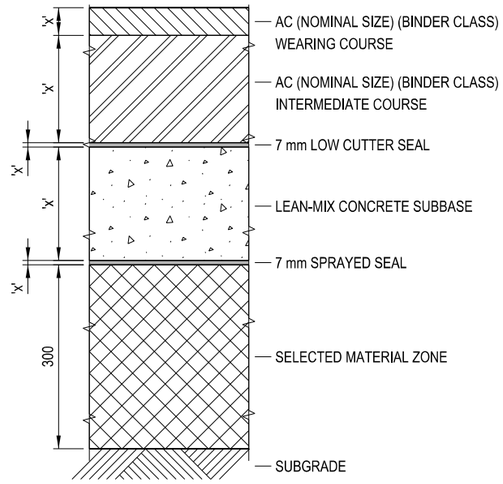

THICK ASPHALT OVER
LEAN-MIX CONCRETE SUBBASE

PTXX

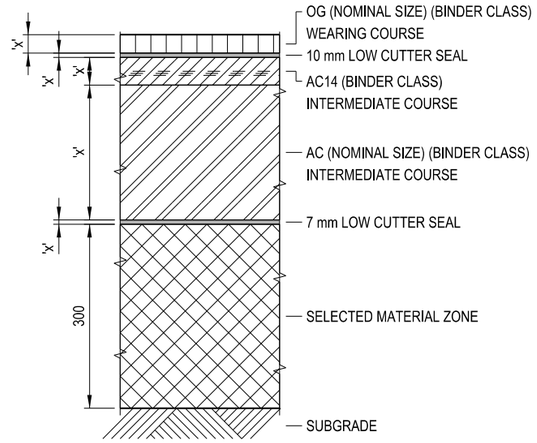

FULL DEPTH ASPHALT WITH
OPEN GRADED ASPHALT WEARING COURSE

PTXX

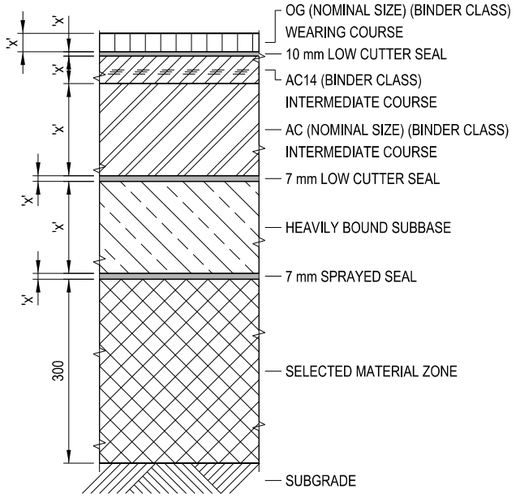

THICK ASPHALT OVER HEAVILY BOUND SUBBASE
WITH OPEN GRADED ASPHALT WEARING COURSE

PTXX

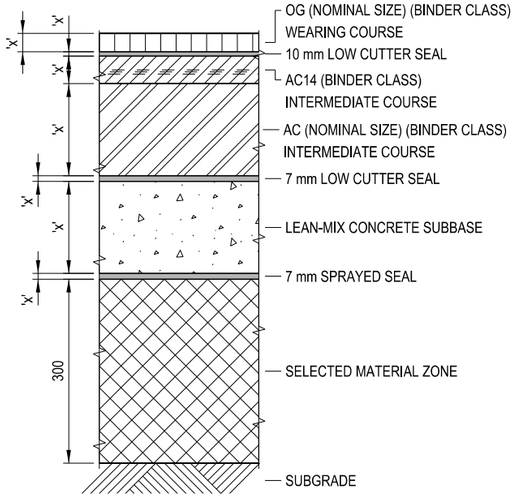

THICK ASPHALT OVER LEAN-MIX CONCRETE SUBBASE
WITH OPEN GRADED ASPHALT WEARING COURSE

PTXX

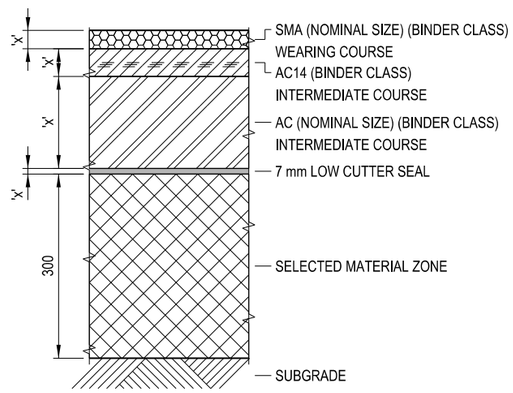

FULL DEPTH ASPHALT WITH
STONE MASTIC ASPHALT WEARING COURSE

PTXX

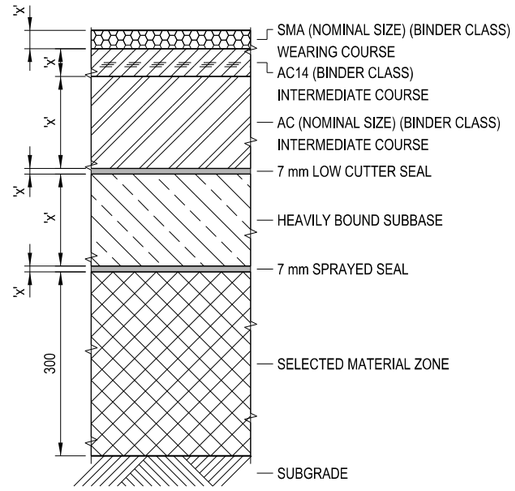

THICK ASPHALT OVER HEAVILY BOUND SUBBASE
WITH STONE MASTIC ASPHALT WEARING COURSE

PTXX

NOTE:
INSTRUCTIONS FOR MATERIAL PROFILES PROJECT SPECIFIC ARE INCLUDED ON SHEETS 03 AND 04.

THIS DRAWING MAY BE PREPARED IN COLOUR AND MAY BE INCOMPLETE IF COPIED

0 5 10 15 20 25 30 35 40 45 50mm ON A3 SIZE ORIGINAL

SCALES: NOT TO SCALE, OR AS NOTED.	A3 ORIGINAL	PREPARED BY: PAVEMENTS AND GEOTECHNICAL UNIT ENGINEERING SERVICES SECTION TECHNICAL SERVICES BRANCH APPROVED FOR USE DIRECTOR PAVEMENTS AND GEOTECHNICAL SAMUEL HENWOOD	NSW GOVERNMENT Transport for NSW	PAVEMENT STANDARD DRAWINGS TYPICAL PAVEMENT PROFILES FLEXIBLE PAVEMENT TYPES - SHEET 1	REGISTRATION No OF PLANS DS2013/000067		SHEET No 05
					ISSUE ED 2 REV 1	DATE 28/01/2021	REFERENCE No P1461	No OF SHEETS 08

© Transport for NSW

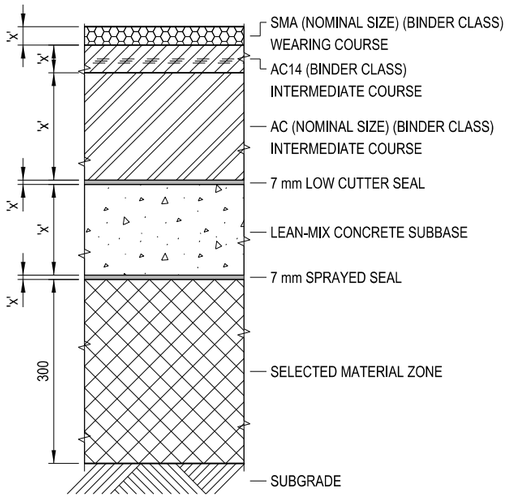

THICK ASPHALT OVER LEAN-MIX CONCRETE SUBBASE
WITH STONE MASTIC ASPHALT WEARING COURSE

PTXX

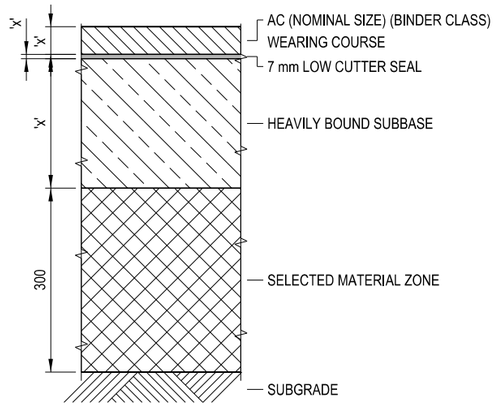

ASPHALT OVER HEAVILY BOUND
SUBBASE (TEMPORARY PAVEMENT)

PTXX

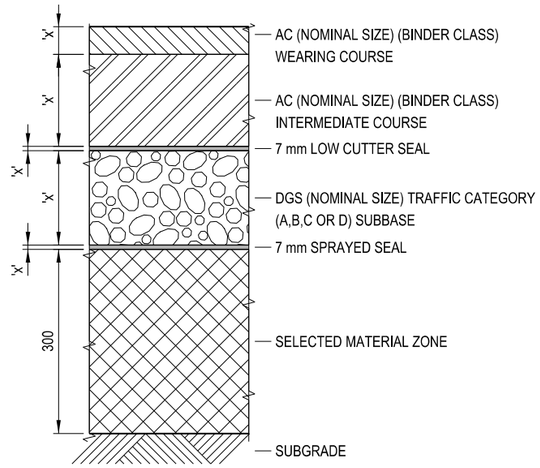

THICK ASPHALT OVER GRANULAR SUBBASE

PTXX

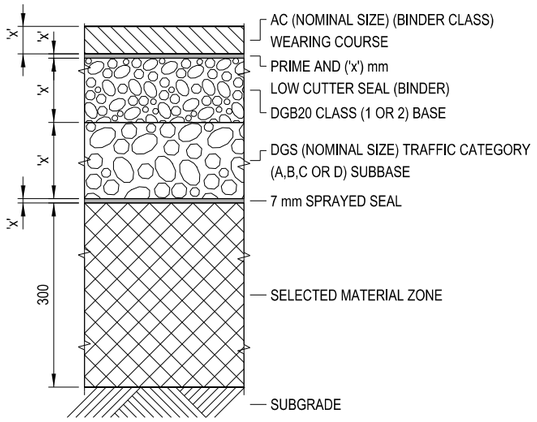

GRANULAR BASE ASPHALT WEARING COURSE

PTXX

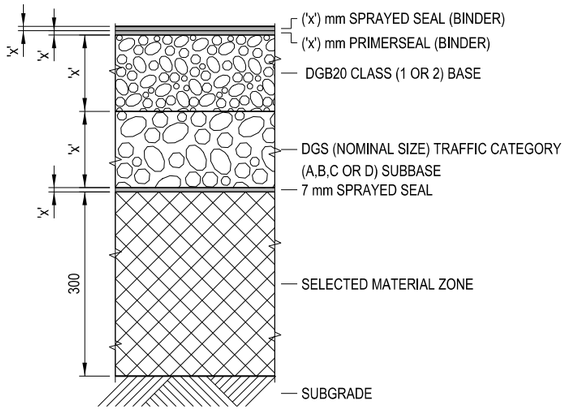

GRANULAR BASE SPRAYED SEAL

PTXX

THIS DRAWING MAY BE PREPARED IN COLOUR AND MAY BE INCOMPLETE IF COPIED

50mm ON A3 SIZE ORIGINAL

SCALES: NOT TO SCALE, OR AS NOTED.	A3 ORIGINAL	PREPARED BY: PAVEMENTS AND GEOTECHNICAL UNIT ENGINEERING SERVICES SECTION TECHNICAL SERVICES BRANCH APPROVED FOR USE DIRECTOR PAVEMENTS AND GEOTECHNICAL SAMUEL HENWOOD	NSW GOVERNMENT Transport for NSW	PAVEMENT STANDARD DRAWINGS TYPICAL PAVEMENT PROFILES FLEXIBLE PAVEMENT TYPES - SHEET 2	REGISTRATION No OF PLANS DS2013/000067	SHEET No 06
					ISSUE ED 2 REV 1	DATE 28/01/2021	REFERENCE No P1461	No OF SHEETS 08

© Transport for NSW

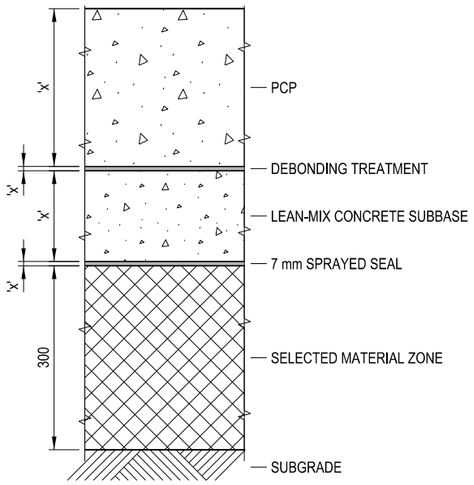

PLAIN CONCRETE

PTXX

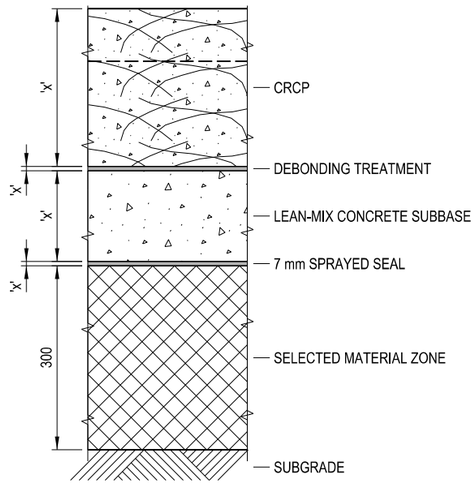

CONTINUOUSLY REINFORCED CONCRETE

PTXX

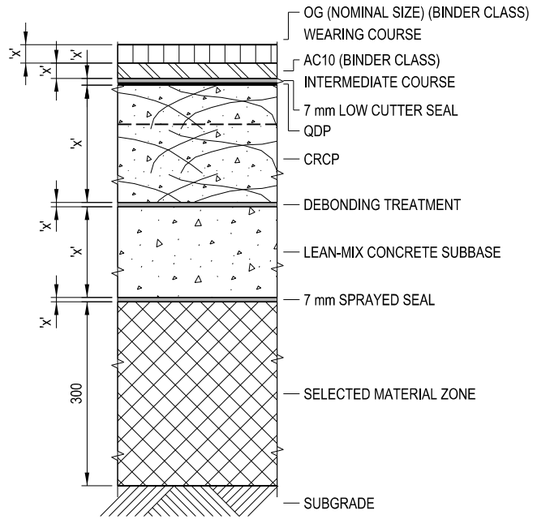

CONTINUOUSLY REINFORCED CONCRETE WITH
OPEN GRADED ASPHALT WEARING COURSE

PTXX

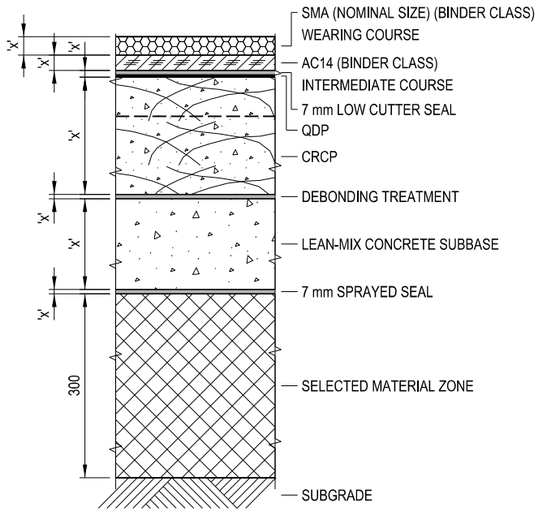

CONTINUOUSLY REINFORCED CONCRETE
WITH STONE MASTIC ASPHALT WEARING COURSE

PTXX

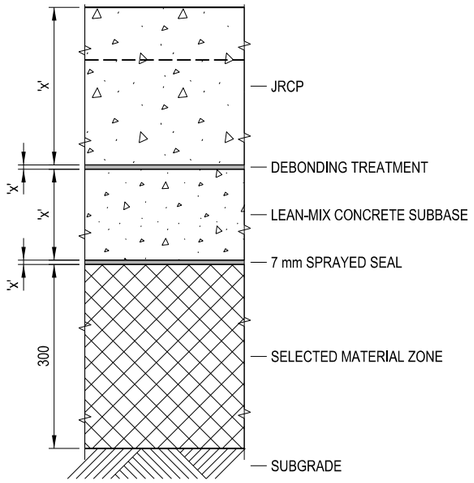

JOINTED REINFORCED CONCRETE

PTXX

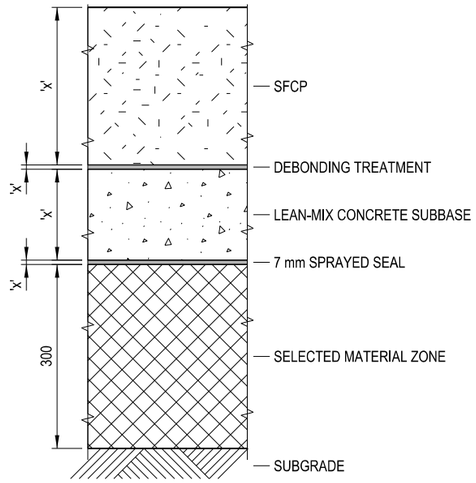

STEEL FIBRE REINFORCED CONCRETE

PTXX

THIS DRAWING MAY BE PREPARED IN COLOUR AND MAY BE INCOMPLETE IF COPIED

0 | 5 | 10 | 15 | 20 | 25 | 30 | 35 | 40 | 45 | 50mm ON A3 SIZE ORIGINAL

SCALES: NOT TO SCALE, OR AS NOTED.	A3 ORIGINAL	PREPARED BY: PAVEMENTS AND GEOTECHNICAL UNIT ENGINEERING SERVICES SECTION TECHNICAL SERVICES BRANCH APPROVED FOR USE DIRECTOR PAVEMENTS AND GEOTECHNICAL SAMUEL HENWOOD	NSW GOVERNMENT Transport for NSW	PAVEMENT STANDARD DRAWINGS TYPICAL PAVEMENT PROFILES RIGID PAVEMENT TYPES	REGISTRATION No OF PLANS DS2013/000067	SHEET No 07
					ISSUE ED 2 REV 1	DATE 28/01/2021	REFERENCE No P1461	No OF SHEETS 08

© Transport for NSW

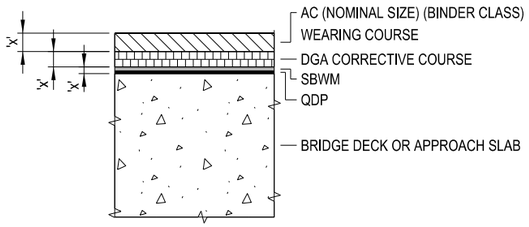

BRIDGE DECK OR APPROACH SLAB
WITH ASPHALT WEARING COURSE

PTXX

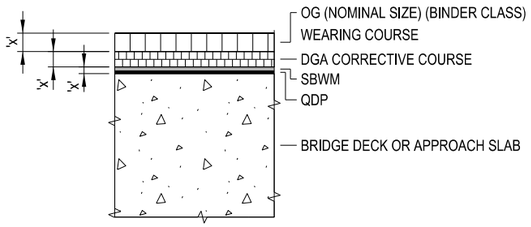

BRIDGE DECK OR APPROACH SLAB WITH
OPEN GRADED ASPHALT WEARING COURSE

PTXX

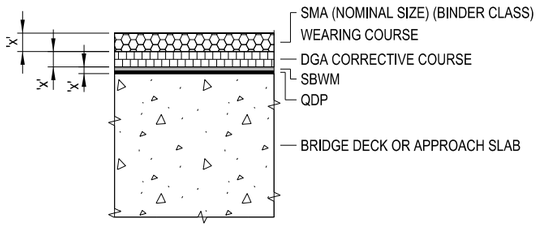

BRIDGE DECK OR APPROACH SLAB WITH
STONE MASTIC ASPHALT WEARING COURSE

PTXX

THIS DRAWING MAY BE PREPARED IN COLOUR AND MAY BE INCOMPLETE IF COPIED

10 | 5 | 10 | 15 | 20 | 25 | 30 | 35 | 40 | 45 | 50mm ON A3 SIZE ORIGINAL

SCALES: NOT TO SCALE, OR AS NOTED. | A3 ORIGINAL

PREPARED BY: PAVEMENTS AND GEOTECHNICAL UNIT
ENGINEERING SERVICES SECTION
TECHNICAL SERVICES BRANCH

APPROVED FOR USE

DIRECTOR
PAVEMENTS AND GEOTECHNICAL
SAMUEL HENWOOD

NSW GOVERNMENT | Transport for NSW

PAVEMENT STANDARD DRAWINGS
TYPICAL PAVEMENT PROFILES
BRIDGE DECK AND APPROACH SLAB
PAVEMENT TYPES

REGISTRATION No OF PLANS	SHEET No
DS2013/000067	08

ISSUE	DATE	REFERENCE No	No OF SHEETS
ED 2 REV 1	28/01/2021	P1461	08

© Transport for NSW